© Siemens 2020

4/2 Product overview
4/2 Level Measurement Selector

4/9 Point level measurement
4/9 RF Capacitance switches
4/11 - Pointek CLS100
4/17 - Pointek CLS200 - Standard
4/33 - Pointek CLS200 - Digital
4/49 - Pointek CLS300 - Standard
4/63 - Pointek CLS300 - Digital
4/78 Vibrating switches
4/78 - SITRANS LVL100
4/85 - SITRANS LVL200
4/111 - SITRANS LVS100
4/115 - SITRANS LVS200
4/125 - SITRANS LVS300
4/133 Rotation paddle switches
4/133 - SITRANS LPS200
4/145 Ultrasonic non-contacting switch
4/145 Pointek ULS200

4/149 Continuous level measurement
4/149 Controllers
4/150 - SITRANS LT500
4/155 - SITRANS LUT400 series
4/163 - MultiRanger 200 HMI
4/168 - MultiRanger 100/200
4/172 - HydroRanger 200 HMI
4/176 - HydroRanger 200
4/180 Ultrasonic
4/182 Ultrasonic transmitters
4/182 - SITRANS LU150
4/187 - SITRANS LU180
4/192 - SITRANS Probe LU
4/197 - SITRANS Probe LU240
4/203 - The Probe
4/206 Ultrasonic transducers
4/207 - ST-H
4/210 - EchoMax XRS-5
4/214 - EchoMax XPS

4/222 Continuous level measurement (continued)
4/222 Accessories for level sensors
4/222 - EA aiming devices
4/224 - FMS mounting brackets
4/226 - TS-3 temperature sensor
4/228 Radar level transmitters
4/232 - SITRANS Probe LR
4/236 - SITRANS LR100
4/238 - SITRANS LR110
4/241 - SITRANS LR120
4/244 - SITRANS LR140
4/246 - SITRANS LR150
4/249 - SITRANS LR200
4/263 - SITRANS LR250 Horn Antenna
4/274 - SITRANS LR250 Polypropylene Lens Antenna
4/283 - SITRANS LR250 Flanged Encapsulated Antenna
4/293 - SITRANS LR250 Hygienic Encapsulated Antenna
4/319 - SITRANS LR460
4/325 - SITRANS LR560
4/331 Guided wave radar transmitters
4/332 - SITRANS LG series
4/375 Capacitance transmitters
4/375 - SITRANS LC300

4/390 Communication
4/390 SmartLinx module

You can download all instructions, catalogs and certificates for SITRANS L free of charge: www.siemens.com/level

© Siemens 2020

Overview

	Application	Device description	Page	Programming Software
Point level measurement - RF Capacitance switches				
	Powerful range of level switches suitable for a variety of industries.	**Pointek CLS100/CLS200/CLS300**		
		• CLS100: compact 2-wire inverse frequency shift capacitance switch for level detection in constricted spaces, interfaces, solids, liquids, slurries, and foam.	**4/11**	-
		• CLS200: a versatile inverse frequency shift capacitance level switch with optional rod/cable choices and configurable output, ideal for detection of liquids, solids, slurries, foam, and interfaces; digital version (with PROFIBUS PA) includes a display and provides additional diagnostic features. Functional Safety (SIL 2). Device suitable for use in accordance with IEC 61508 and IEC 61511.	**4/17**	SIMATIC PDM
		• CLS300: inverse frequency shift capacitance level switch with optional rod/cable choices and configurable output. It is ideal for detecting liquids, solids, slurries, foam and interfaces in demanding conditions where high pressure and temperatures are present; digital version (with PROFIBUS PA) includes a display and provides additional diagnostic features.	**4/49**	SIMATIC PDM
Point level measurement - Vibrating switches				
	Reliable vibrating point level switches for liquid and slurry applications across all industries.	**SITRANS LVL100/LVL200**		
		• LVL100: compact vibrating level switch for use in liquid and slurry applications such as overflow, high, low, and demand level applications. Also ideal for dry run protection.	**4/78**	-
		• LVL200: advanced vibrating level switch for use in liquid and slurry applications. Suited for most hazardous area applications such as: overflow, high, low, demand, and dry run protection. Functional Safety (SIL 2). Device suitable for use in accordance with IEC 61508 and IEC 61511.	**4/85**	-
	Reliable vibrating point level switches for bulk solids in a wide variety of applications.	**SITRANS LVS100/LVS200/LVS300**		
		• LVS100: vibrating point level switch designed to be impervious to external vibrations and to provide reliable performance in demanding bulk solids applications.	**4/111**	-
		• LVS200: vibrating point level switch designed to be impervious to external vibrations and to provide reliable performance in demanding bulk solids applications.	**4/115**	-
		• LVS300: vibrating rod point level switch for high, low, or demand level detection of bulk solids. Durable probe, ideal for larger granule sizes.	**4/125**	
Point level measurement - Rotating paddle switches				
	Reliable rotating point level switches for bulk solids in a wide variety of applications.	**SITRANS LPS200** • Rotating paddle switch for detection of high, low, and demand levels in a wide variety of bulk solids industries. Unique engineering provides long-lasting, reliable performance. • Functional Safety (SIL 2). Device suitable for use in accordance with IEC 61508 and IEC 61511.	**4/133**	-
Point level measurement - Ultrasonic switch				
	Ultrasonic non-contacting switch with two switch points for level detection of bulk solids, liquids and slurries in a wide variety of industries.	**Pointek ULS200** • Rugged design, no moving parts, and virtually maintenance-free. • Transducer available in ETFE or PVDF copolymer and therefore inert to most chemicals.	**4/145**	-

© Siemens 2020

Overview

	Application	Device description	Page	Programming Software
Continuous level measurement - Controllers				
	SITRANS LT500 is a versatile, single and multi-vessel level monitor/controller for virtually any application in a wide range of industries.	**SITRANS LT500** • Level, volume, and flow measurements in open channels, differential control, extended pump control, and alarm functions. • Easy to use HMI display with local four-button programming, menu-driven parameters, and wizard support for key applications.	**4/150**	-
	The SITRANS LUT400 series controllers are compact, single point, long-range ultrasonic controllers for continuous level or volume measurement of liquids, slurries, and solids, and high accuracy monitoring of open channel flow.	**SITRANS LUT420/430/440** In addition to industry leading 1 mm (0.04 inch) accuracy, each of the three models in the series are compatible with our full range of EchoMax transducers and offer varying degrees of pump, alarm, and other control functionality, all from a very compact and easy-to-use interface. • 1 mm accuracy. • HART communications. • Next Generation Sonic Intelligence.	**4/155**	SIMATIC PDM
	Versatile short- to medium-range ultrasonic single- and dual-vessel level controller for virtually any application in a wide range of industries.	**MultiRanger 100/200** • Using non-contacting ultrasonic technology, the controller measures the level in short to medium range applications up to 15 m (50 ft) of solids, liquids, or slurries • Auto False-Echo Suppression of false echoes	**4/168**	SIMATIC PDM
	Ultrasonic level controller for up to six pumps - control, differential control, and open channel flow monitoring.	**HydroRanger 200** • An economical, low-maintenance solution delivering control efficiency and productivity needed to meet today's exacting standards • Auto False-Echo Suppression of false echoes	**4/172**	SIMATIC PDM

© Siemens 2020

Overview

	Application	Device description	Page	Programming Software
Continuous level measurement - Ultrasonic transmitters				
	SITRANS LU150 and LU180 are short-range integrated ultrasonic level transmitters. These 2-wire, 4 to 20 mA loop powered transmitter are ideal for liquids, slurries, and bulk materials in open or closed vessels to 5 m (16.4 ft).	**SITRANS LU150** • LU150 is approved for general purpose applications. • Easy to install, program, and maintain. • Patented Sonic Intelligence echo processing. **SITRANS LU180** • LU180 is approved for intrinsically safe applications. • Easy to install, program, and maintain. • Patented Sonic Intelligence echo processing.	**4/182** **4/187**	- -
	2-wire loop powered ultrasonic transmitter for level, volume, and flow monitoring of liquids in open channels, storage vessels and simple process vessels.	**SITRANS Probe LU** • Continuous level measurement up to 12 m (40 ft) range. • Sonic Intelligence signal processing. • Auto False-Echo Suppression.	**4/192**	SIMATIC PDM
	Ultrasonic level transmitter with HART, 4 to 20 mA is ideal for level, volume, and volume flow measurements. It works with liquids, slurries, and bulk materials up to 12 meters (40 feet).	**SITRANS Probe LU240** • Continuous level measurement up to 12 m (40 ft) range. • Next generation Process Intelligence signal processing. • Auto False-Echo Suppression for fixed obstruction avoidance. • Fast and easy configuration with quick start wizards.	**4/197**	SIMATIC PDM
	Compact level transmitter with integrated transducer for accurate level measurement of liquid applications.	**The Probe** • A short-range integrated ultrasonic level transmitter, ideal for liquids and slurries in open or closed vessels. • 3 wire system with mA output and alarm relay.	**4/203**	-
Continuous level measurement - Ultrasonic transducers				
	ST-H: ETFE or PVDF transducer for chemicals XRS-5: Standard transducer for applications to 8 m (26 ft)	**ST-H/EchoMax XRS-5** • ST-H: the narrow design of the ST-H allows the sensor to be mounted using a 2 inch connection • XRS-5: narrow beam angle of only 10°, measuring range maximum 8 m (26 ft) for measurement of liquids, solids, and slurries	**4/207** **4/210**	- -
	Transducers for liquids and bulk solids XPS series: Hermetically sealed PVDF enclosure for chemical immunity	**EchoMax XPS** • XPS series offers versions for various distances up to 30 m (100 ft) and up to a maximum temperature of 95 °C (203 °F)	**4/214**	-

© Siemens 2020

Overview

	Application	Device description	Page	Programming Software
Continuous level measurement - Radar transmitters				
	2-wire, 6 GHz pulse radar level transmitter for continuous monitoring of liquids and slurries in storage vessels with nominal pressure and temperature, to a range of 20 m (66 ft).	**SITRANS Probe LR** • Uni-Construction polypropylene rod antenna standard • Process Intelligence signal processing • Auto False-Echo Suppression of false echoes	**4/232**	SIMATIC PDM
	SITRANS LR100: a compact radar transmitter for continuous level measurement of liquids and slurries to a range of 8 m (26 ft). SITRANS LR110: a compact radar transmitter for continuous level measurement of liquids, slurries, or solids to a range of 15 m (49.2 ft).	**SITRANS LR100** • Bluetooth connectivity for easy setup with SITRANS mobile IQ • Chemically resistant PVDF enclosure • W band FMCW radar yields narrow beam with small antenna for superior performance in short range applications • 5 mm accuracy **SITRANS LR110** • Bluetooth connectivity for easy setup with SITRANS mobile IQ • Chemically resistant PVDF enclosure • W band FMCW radar yields narrow beam with small antenna for superior performance in short range applications • HART 7.0 or Modbus RTU communication for intelligent integration into your application • 2 mm accuracy and zero near range distance yields optimum inventory management capability	**4/236** **4/238**	
	Compact radar transmitter for continuous level measurement of liquids and solids to a range of 30 m (98.4 ft).	**SITRANS LR120** • Bluetooth connectivity for easy setup with SITRANS mobile IQ • Chemically resistant PVDF enclosure • W band FMCW radar yields narrow beam with small antenna for superior performance in short range applications • HART 7.0 or Modbus RTU (in preparation) communication for intelligent integration into your application • Submergence shield accessory prevents build up on sensor during flooding conditions • 2 mm accuracy and zero near range distance yields optimum inventory management capability	**4/241**	
	SITRANS LR140: a 2 wire loop powered radar transmitter for continuous level measurement of liquids and slurries to a range of 8 m (26 ft). SITRANS LR150: a compact radar transmitter for continuous level measurement of liquids, slurries, and solids to a range of 15 m (49.2 ft), with optional HMI.	**SITRANS LR140** • Bluetooth connectivity for easy setup with SITRANS mobile IQ. • Chemically resistant PVDF sensor. • W band FMCW radar yields narrow beam with small antenna for superior performance in short range applications. **SITRANS LR150** • Bluetooth connectivity for easy setup with SITRANS mobile IQ. • Optional HMI with pushbutton programming and local diagnostic data. • Chemically resistant PVDF sensor. • W band FMCW radar yields narrow beam with small antenna for superior performance in short range applications.	**4/244** **4/246**	
	2-wire, 6 GHz pulse radar level transmitter for continuous monitoring of liquids and slurries in storage and process vessels including high temperature and pressure, to a range of 20 m (66 ft).	**SITRANS LR200** • Program without opening the lid, even in hazardous areas, using patented infrared IS handheld programmer • Special Uni-Construction hermetically sealed polypropylene rod antenna has integrated threaded connection • Built-in alphanumeric display with support in four languages	**4/249**	SIMATIC PDM AMS SITRANS DTM

© Siemens 2020

Overview

	Application	Device description	Page	Programming Software
	2-wire, 25 GHz pulse radar level transmitter for continuous monitoring of liquids and slurries in storage and process vessels including high temperature and pressure, to a range of 20 m (66 ft); antenna designs ideal for small vessels, low dielectric media, food & beverages and corrosive/aggressive media.	**SITRANS LR250** • Simple operation using the graphical local user interface (LUI) • Plug-and-play setup using the intuitive Quick Start Wizard • 25 GHz high frequency allows for small horn antennas and easy mounting in nozzles • Process Intelligence signal processing for improved measurement reliability and Auto False-Echo Suppression of fixed obstructions	**4/263**	SIMATIC PDM AMS SITRANS DTM
	4-wire, 24 GHz FMCW radar level transmitter with extremely high signal-to-noise ratio and advanced signal processing for continuous monitoring of solids up to 100 m (328 ft); ideal for measurement in extreme dust and high temperature applications	**SITRANS LR460** • Process Intelligence for advanced signal processing and quick and easy adjustment • Self-guided Quick Start Wizard for plug and play startup • 100 m (328 ft) range for long-range and difficult applications	**4/319**	SIMATIC PDM
	2-wire, 78 GHz FMCW radar level transmitter for continuous monitoring of solids and liquids to a range of 100 m (328 ft); easy to install, plug and play, virtually no maintenance	**SITRANS LR560** • Rugged stainless steel design • 78 GHz high frequency provides very narrow beam, virtually no mounting nozzle noise, and optimal reflection from sloped solids • Aimer option to direct beam to area of interest, such as draw point of cone • Air purge connection is included for self-cleaning of extremely sticky solids • Lens antenna is highly resistant to product buildup • Local display interface (LDI) allows local programming and diagnostics	**4/325**	SIMATIC PDM AMS SITRANS DTM
Continuous level measurement - Guided wave radar transmitters				
	Guided wave radar transmitters for short- and medium-range level, level/interface, and volume measurement of liquids, slurries, and solids. The four LG models are unaffected by changes in process conditions, high temperatures and pressures, and provide a wide range of hygienic options.	**SITRANS LG240/250/260/270** • Measures accurately on materials with dielectric (dK) as low as 1.4 • Guided wave radar measurement for up to 2 mm (0.08 inch) accuracy • Measures level, level/interface, and volume of solids, slurries, and liquids • 4 button programming for quick setup • Reliable level measurement on harsh applications with pressure up to 400 bar g (40 000 kPa) and temperatures as high as 450 °C (842 °F)	**4/332**	SIMATIC PDM SITRANS DTM
Continuous level measurement - Capacitance transmitters				
	For liquids and solids applications, ideal for standard industrial applications in chemical, hydrocarbon processing, food and beverage, and mining, aggregate and cement industries.	**SITRANS LC300** • Sophisticated, but easy-to-adjust microprocessor combined with field-proven probes • Active shield technology ensures measurements are unaffected by vapors, product deposits, dust, and condensation	**4/375**	-
Communications				
		SmartLinx Module • Optional communication modules, SmartLinx, provide direct digital connection to popular industrial fieldbus systems	**4/390**	-

© Siemens 2020

Overview

Continuous Level						
Conditions	**Ultrasonic**	**Radar**	**Guided Wave Radar**	**Capacitance**	**Gravimetric**	**Hydrostatic pressure**
Measurement						
Level	■	■	■	■	◆	■
Interface (liquid/liquid)			■	◆		■
Interface (liquid/solid)	◆			◆		
Volume	■	■	■	◆	◆	■
Mass					■	■
Flow (open channel)	■	◆				
Level Applications						
Changing density	■	■	■	■		
Changing dielectric	■	■	■	◆	■	■
Aggressive chemicals	■	■	■	■	■	■
Pressure/vacuum		■	■	■	■	■
High temperature		■	■	■	■	■
Cryogenic			■		■	
Turbulence	■	■	◆	◆	■	■
Steam		◆	■	◆	■	■
Hydrocarbon vapors/solvents		■	■	■	■	■
Foam	◆	◆	◆	◆	■	■
Buildup	◆	◆	◆	◆	■	◆
High viscosity	■	■	◆	◆	■	◆
Dust	◆	■	■	■	■	
Solids powders	◆	■	◆	◆	■	
Solids granules/pellets < 25 mm (1 inch)	■	■	◆	◆	■	
Solids > 25 mm (1 inch)	■	■			■	
High angle of repose	◆	■	■	◆	■	

■ preferred

◆ condition dependent

© Siemens 2020

Overview

Point Level				
Conditions	**Vibration**	**Capacitance**	**Paddle**	**Ultrasonic**
Measurement				
Level	■	■	■	■
Interface (liquid/liquid)		■		
Interface (liquid/solid)	◆			
Volume				
Mass				
Flow (open channel)				
Level Applications				
Changing density	■	■	■	■
Changing dielectric	■	◆	■	■
Aggressive chemicals	■	■	◆	■
Pressure/vacuum	■	■	■	
High temperature	■	■	■	
Cryogenic	■			
Turbulence	◆	◆		■
Steam	■	◆	■	
Hydrocarbon vapors/solvents	■	◆		
Foam	◆	◆		◆
Buildup	◆	◆	■	◆
High viscosity	◆	◆	◆	■
Dust	■	■	■	◆
Solids powders	■	◆	■	◆
Solids granules/pellets < 25 mm (1 inch)	■	◆	■	■
Solids > 25 mm (1 inch)	◆	◆	■	■
High angle of repose	■	■	■	◆

■ preferred

◆ condition dependent

© Siemens 2020

Overview

Introduction

Inverse frequency shift capacitance point level and material detection switches are designed to withstand the harsh environments of high pressure and high temperature applications.

Inverse Frequency Technology

Siemens inverse frequency shift capacitance devices incorporate a unique frequency-based approach to level measurement. The capacitance units monitor the effect of capacitance based on frequency change. The relationship between capacitance and frequency is inverse. Because small level changes result in a large frequency change, the result is excellent resolution and accuracy.

Principle of Operation

Inverse frequency shift capacitance devices require two components: a reference electrode of a variable capacitor and the measurement electrode. In capacitive level measurement, the environment (typically the vessel wall) acts as the reference electrode, while the probe supplies the measurement electrode. The dielectric is composed of the vessel contents and, if the measurement electrode is insulated, the insulating layer.

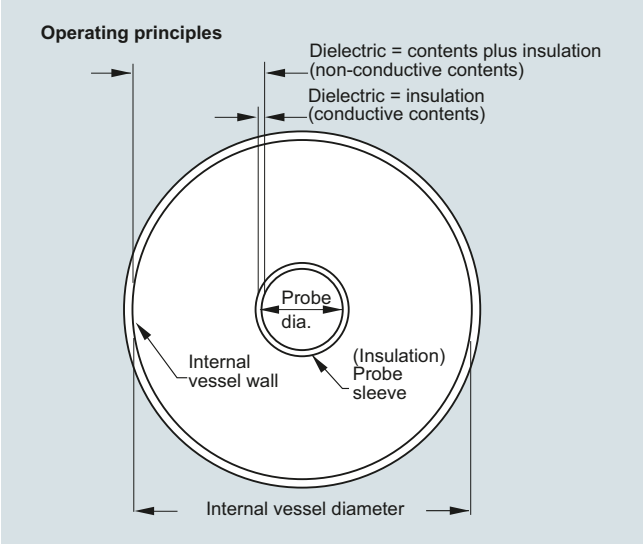

Inverse frequency shift capacitance operation

Capacitance is affected by the surface area of the electrodes, the separation distance between the electrodes and the dielectric constant of the vessel contents. The dielectric constant is the measure of a material's ability to store energy. The relative dielectric constant of air (vacuum) is 1; all other materials have a higher value.

Mode of operation

Common Terms

Capacitance

The property of a system of conductors and dielectrics that permits the storage of electricity when a potential difference exists between the conductors. Its value is expressed as the ratio of a quantity of electricity to a potential difference and the unit is a Farad.

Capacitor

A device in a circuit that has the potential to store an electric charge. Typically a capacitor has two conductors or electrodes separated by a layer of a non-conducting material called a dielectric. With the conductors on opposite sides of the dielectric layer oppositely charged by a source of voltage, the electrical energy of the charged system is stored in the polarized dielectric.

Dielectric constant

The ability of a dielectric to store electrical potential energy under the influence of an electric field. This is measured by a ratio which compares the capacitance of a condenser with the material as dielectric to its capacitance with a vacuum/dry air as dielectric: the dielectric constant of air is 1.

Active shield

The portion of the probe isolated from the active measurement section. The sensor signal is connected to the active shield portion of the probe, eliminating the electrical potential difference between the shield and the measurement section. So, the shield portion of the probe near the process connection is not affected by changes in vapor concentration, material buildup, dust, or condensation.

© Siemens 2020

Technical specifications

Point Level Measurement			
Criteria	**Pointek CLS100**	**Pointek CLS200**	**Pointek CLS300**
Typical applications	Liquids, slurries, powders, granules, applications in constricted spaces	Liquids, slurries, powders, granules, foam, food, and pharmaceuticals, - petrochemicals	Liquids, slurries, powders, granules, relatively high pressure, and temperature, hazardous areas
Max. length including sensor	100 mm (4 inch)	Rod: 5.5 m (18 ft) Cable: up to 30 m (98 ft)	Rod: 1 m (40 inch) Cable: 25 m (82 ft)
Process temperature (Temperature ratings are pressure dependent. See Pressure/Temperature curves for respective product.)	• Stainless steel process connection: -30 ... +100 °C (22 ... +212 °F) • Fully Synthetic (PPS process connection): -10 ... +100 °C (14 ... 212 °F)	• -40 ... +85 °C (-40 ... +185 °F) • With thermal isolator: -40 ... +125 °C (-40 ... +257 °F)	• -40 ... +200 °C (-40 ... +392 °F) • HT version: -40 ... +400 °C (-40 ... +752 °F)
Process pressure (Pressure ratings are temperature dependent. See Pressure/Temperature curves for respective product.)	Up to 10 bar g (146 psi g)	• Rod versions: Up to 25 bar g (365 psi g) • Cable version: Up to 10 bar g (146 psi g)	Up to 35 bar g (511 psi g)
Output	Stainless steel cable or enclosure version: • 4 ... 20/20 ... 4 mA, 2-wire current loop • Solid-state output Fully-synthetic version (PPS) • Relay output	Standard: • 1 SPDT Form C relay, solid-state switch Digital: • Solid-state switch included	Standard: • 1 SPDT Form C relay, solid-state switch Digital: • Solid-state switch included
Communications		Standard: • 3 LED indicators Digital: • PROFIBUS PA; SIMATIC PDM compatible	Standard: • 3 LED indicators Digital: • PROFIBUS PA; SIMATIC PDM compatible
Power Specifications	Standard: • 12 ... 33 V DC Intrinsically Safe (Stainless steel version only): • 10 ... 30 V DC	Standard: • 12 ... 250 V AC/DC, 0 ... 60 Hz, 2 W max. Digital: • Bus voltage: 12 ... 30 V DC, IS version: 12 ... 24 V DC • Current consumption: 12.5 mA	Standard: • 12 ... 250 V AC/DC, 0 ... 60 Hz, 2 W max. Digital: • Bus voltage: 12 ... 30 V DC, IS version: 12 ... 24 V DC • Current consumption: 12.5 mA
Approvals	Stainless steel cable or enclosure version: CE, CSA, FM, ATEX, RCM, Lloyds Register, WHG Fully-synthetic version (PPS): CSA, FM	CSA, FM, CE, ATEX, RCM, Lloyds Register, WHG, Vlarem II	CSA, FM, CE, ATEX, RCM, Lloyds Register, WHG, Vlarem II

© Siemens 2020

Overview

Pointek CLS100 is a compact, 2-wire, inverse frequency shift capacitance switch for level and material detection in constricted spaces, interfaces, solids, liquids, slurries, and foam; with the ability to tune out buildup on probe.

Benefits

- Easy installation with verification by built-in LED
- Low maintenance with no moving parts
- Sensitivity adjustment
- Integrated cable or PBT enclosure versions available
- Intrinsically Safe, Dust Ignition Proof, and General Purpose options available

Application

Pointek CLS100's short insertion length of 100 mm (4 inch) and versatility in various applications and in vessels or pipes makes it a good replacement for traditional capacitance sensors.

Its advanced tip-sensing technology provides accurate, repeatable switchpoint performance. The PPS (Polyphenylene sulfide) probe [optional PVDF (Polyvinylidene Fluoride)] is chemically resistant with an effective process operating temperature range from -30 to +100 °C (-22 to +212 °F) (7ML5501), and -10 to +100 °C (14 to 212 °F) (7ML5610). The fully potted design ensures reliability in a vibrating environment such as agitated tanks up to 4 g. When used with a SensGuard protection cover, the CLS100 is protected from shearing, impact, and abrasion in tough primary processes.

The Pointek CLS100 is available in three versions. The integral cable version has a stainless steel process connection and probe options of PPS or PVDF. The fully synthetic version has a thermoplastic polyester enclosure with a PPS process connection combined with a PPS probe. The standard enclosure version has a thermoplastic polyester enclosure with a stainless steel process connection in combination with a PPS or PVDF probe.

- Key Applications: liquids, slurries, powders, granules, food and pharmaceuticals, chemicals, hazardous areas

Configuration

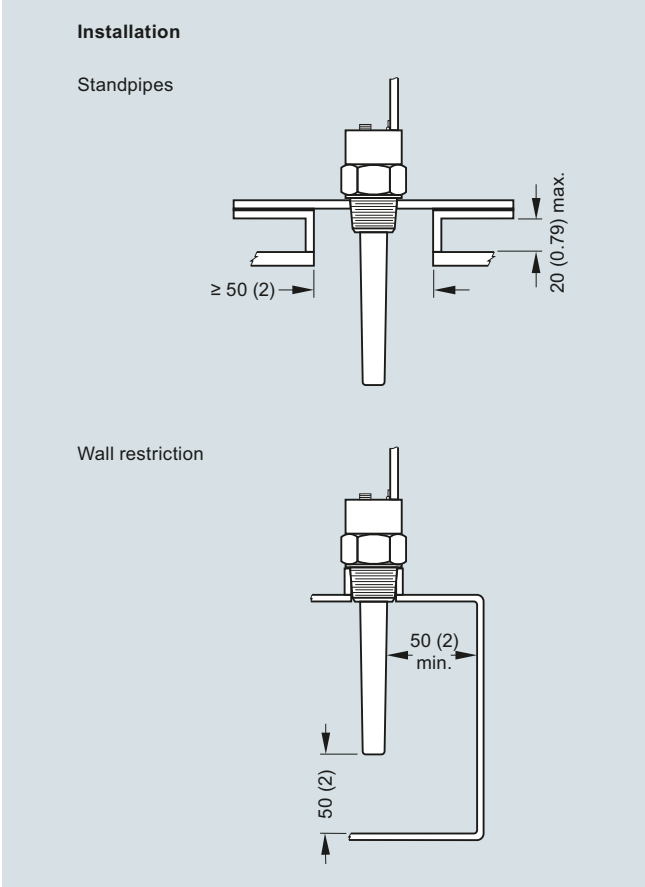

Pointek CLS100 installation, dimensions in mm (inch)

© Siemens 2020

Technical specifications

	Stainless steel process connection (integral cable or enclosure version) (7ML5501)	Fully synthetic process connection (enclosure version only) (7ML5610)
Mode of operation		
Measuring principle	Inverse frequency shift capacitive level detection	Inverse frequency shift capacitive level detection
Input		
Measured variable	Change in picoFarad (pF)	Change in picoFarad (pF)
Output		
Output signal		
• Alarm output	4 ... 20/20 ... 4 mA 2-wire loop	4 ... 20/20 ... 4 mA 2-wire loop
• Switch output[1]	Solid-state: 30 V DC/30 V AC, max. 82 mA	Max. switching voltage: 60 V DC/30 V AC Max. switching current: 1 A
• Fail-safe mode	Min. or max.	Min. or max.
Accuracy		
Repeatability	2 mm (0.08 inch)	2 mm (0.08 inch)
Rated operating conditions[2]		
Installation conditions		
• Location	Indoor/outdoor	Indoor/outdoor
Ambient conditions		
• Ambient temperature	-30 ... +85 °C (-22 ... +185 °F)	-10 ... +85 °C (14 ... 185 °F)
• Storage temperature	-40 ... +85 °C (-40 ... +185 °F)	-40 ... +85 °C (-40 ... +185 °F)
• Installation category	I	I
• Pollution degree	4	4
Medium conditions		
• Relative dielectric constant ε_r	Min. 1.5	Min. 1.5
• Process temperature	-30 ... +100 °C (-22 ... +212 °F)	-10 ... +100 °C (14 ... 212 °F)
• Pressure (vessel)	-1 ... +10 bar g (-14.6 ... +146 psi g), nominal[2]	-1 ... +10 bar g (-14.6 ... +146 psi g), nominal
• Degree of protection		
- Enclosure version	IP68/Type 4/NEMA 4	IP68/Type 4/NEMA 4
- Integral cable version	IP65/Type 4/NEMA 4	Not applicable
• Cable inlet	½" NPT (M20 x 1.5 optional)	½" NPT (M20 x 1.5 optional)
Design		
	Enclosure/Integral cable version	Fully synthetic version
Material		
• Body (Enclosure version)	Thermoplastic polyester	Thermoplastic polyester
• Lid (Enclosure version)	Transparent thermoplastic polycarbonate (PC)	Transparent thermoplastic polycarbonate (PC)
• Integrated cable body (Integral cable version)	316L stainless steel	Not applicable

	Stainless steel process connection (integral cable or enclosure version) (7ML5501)	Fully synthetic process connection (enclosure version only) (7ML5610)
Sensor length (nominal)	100 mm (4 inch)	100 mm (4 inch)
Process connection material of probe/wetted parts[3]	Connection: 316L stainless steel; Process seal: FKM (optional FFKM); Sensor: PPS (optional PVDF)[4]	PPS process connection and PPS sensor (Uni-Construction)
Connection (Enclosure version)	Internal 5-point terminal block, ½" NPT wiring entrance, M20 x 1.5 optional	Removable internal 5-point terminal block, ½" NPT wiring entrance, M20 x 1.5 optional
Connection (Integral cable version)	4 conductors, 1 m (3.3 ft), 0.5 mm² (22 AWG), shielded, polyester jacket	Not applicable
Process connection	¾" NPT [(Taper), ANSI/ASME B1.20.1] R 1" [(BSPT), EN 10226/PT (JIS-T), JIS B 0203] G 1" [(BSPP), EN ISO 228-1/PF (JIS-P), JIS B 0202]	¾" NPT [(Taper), ANSI/ASME B1.20.1] R 1" [(BSPT), EN 10226/PT (JIS-T), JIS B 0203]
Power supply		
Standard	12 ... 33 V DC	12 ... 33 V DC
Intrinsically Safe	10 ... 30 V DC (Intrinsically Safe barrier required)	Not applicable
Certificates and approvals	• General: CE, CSA, FM, RCM • Marine: Lloyds Register of Shipping, categories ENV1, ENV2, and ENV5 Dust Ignition Proof (barrier required): CSA/FM Class II and III, Div. 1, Groups E, F, G T4 • Intrinsically Safe (barrier required): CSA/FM Class I, II, and III, Div. 1, Groups A, B, C, D, E, F, G T4 ATEX II 1 GD 1/2GD EEx ia IIC T4 to T6 T107 °C • Overfill protection: WHG (Germany)	• General: CSA, FM

1) When synthetic process connection version (7ML5610) is used in wet locations, switching voltage of the relay is limited to 35 V DC/16 V AC.

2) When operation is in areas classified as hazardous, observe restrictions according to relevant certificate.
See also Pressure/Temperature curves on page 5/13.

3) For caustic materials, consult a local sales person for alternative O-rings. For more information, please visit http://www.automation.siemens.com/aspa_app.

4) When FFKM O-ring (Option A22) is selected, process temperature is restricted to -20 °C (-4 °F).

© Siemens 2020

Selection and ordering data

	Article No.
Pointek CLS100 RF Capacitance point level switch, stainless steel process connection ↗	**7ML5501-**
Detects level and interface in liquids, solids, slurries and foam. Compact, with 100 mm (4 inch) insertion, adaptable sensitivity, with the ability to tune out build-up on probe.	**0** ■ ■ ■ ■
↗ Click on the Article No. for the online configuration in the PIA Life Cycle Portal.	
Process Connection	
¾" NPT [(Taper), ANSI/ASME B1.20.1]	**A**
R 1" [(BSPT), EN 10226/PT (JIS-T), JIS B 0203]	**E**
G 1" [(BSPP), EN ISO 228-1/PF (JIS-P), JIS B 0202]	**J**
Approvals	
General Purpose: CE, CSA, FM, RCM	**A**
CSA/FM Class I, II, and III, Div. 1, Groups A, B, C, D, E, F, G T4; ATEX II 1 GD ½ GD EEx ia IIC T4 ... T6 T107 °C[1]	**C**
CSA/FM Class II and III, Div. 1, Groups E, F, G[1]	**G**
Device version	
Integral cable version (PPS probe)	**1**
Enclosure version (PPS probe), ½" NPT cable inlet	**3**
Integral cable version with PVDF probe body	**5**
Enclosure version with PVDF probe body (½" NPT cable inlet)	**6**
Enclosure version (PPS probe), M20 x 1.5 cable inlet	**7**
Enclosure version with PVDF probe body, M20 x 1.5 cable inlet	**8**
Overfill protection	
Not required	**0**
Required (WHG)	**1**

[1] Barrier or Intrinsically Safe power supply required for Intrinsically Safe protection.

Further designs	Order code
Please add "**-Z**" to Article No. and specify Order code(s).	
Stainless steel tag [70 x 13 mm (2.75 x 0.5 inch)]: Measuring-point number/identification (max. 20 characters) specify in plain text	**Y17**
FFKM seal O-ring[1]	**A22**
Material inspection Certificate Type 3.1 per EN 10204	**C12**
INMETRO[2]	**E34**
Operating Instructions	
Note: due to ATEX regulations one Quick start manual is included with every product. All literature is available to download for free, in a range of languages, at	

http://www.siemens.com/processinstrumentation/documentation

[1] See Temperature restriction on page 4/14.

[2] Available only with Approvals option C.

Accessories	Article No.
SensGuard, ¾" NPT (PPS). Only available for CLS100 with ¾" NPT thread.	**7ML1830-1DL**
SensGuard, R 1" (BSPT) (PPS). Only available for CLS100 with ¾" NPT thread.	**7ML1830-1DM**
Tag, stainless steel, 12 x 45 mm (0.47 x 1.77 inch), one text line, suitable for enclosures	**7ML1930-1AC**
Siemens Intrinsically Safe Barrier (DC powered), ATEX II 1 G EEx ia	**7NG4124-0AA00**
½" NPT General Purpose Cable Entry IP68/IP69K NEMA 6, -40 ... +80 °C (-40 ... +176 °F), Dust Ignition Proof, cable size 6 ... 12 mm (0.236 ... 0.472 inch)	**7ML1830-1JA**
M20 x 1.5 General Purpose Cable Entry IP68/IP69K NEMA 6, -40 ... +80 °C (-40 ... +176 °F), Dust Ignition Proof, cable size 7 ... 12 mm (0.275 ... 0.472 inch)	**7ML1830-1JC**

	Article No.
Pointek CLS100 RF Capacitance point level switch, PPS process connection ↗	**7ML5610-**
Detects level and interface in liquids, solids, slurries, and foam. Compact, with 100 mm (4 inch) insertion, adaptable sensitivity, with the ability to tune out build-up on probe.	**0** ■ ■ ■ ■
↗ Click on the Article No. for the online configuration in the PIA Life Cycle Portal.	
Process connection (PPS)	
¾" NPT [(Taper), ANSI/ASME B1.20.1] (PPS probe body)	**A**
R 1" [(BSPT), EN 10226/PT (JIS-T), JIS B 0203] (PPS probe body)	**B**
Approvals	
General Purpose: CSA, FM	**D**
Versions/Options	
Enclosure version, PPS process connection, ½" NPT cable inlet	**1**
Enclosure version, PPS process connection, M20 x 1.5	**2**
Overfill protection	
Not required	**0**
Required	**1**

Further designs	Order code
Please add "**-Z**" to Article No. and specify Order code(s).	
Stainless steel tag [70 x 13 mm (2.75 x 0.5 inch)]: Measuring-point number/identification (max. 20 characters) specify in plain text	**Y17**
Material inspection Certificate Type 3.1 per EN 10204	**C12**
Operating Instructions	
Note: due to ATEX regulations one Quick start manual is included with every product. All literature is available to download for free, in a range of languages, at	

http://www.siemens.com/processinstrumentation/documentation

Accessories	Article No.
SensGuard, ¾" NPT (PPS). Only available for CLS100 with ¾" NPT thread.	**7ML1830-1DL**
SensGuard, R 1" (BSPT) (PPS). Only available for CLS100 with ¾" NPT thread.	**7ML1830-1DM**
Tag, stainless steel, 12 x 45 mm, (0.47 x 1.77 inch) one text line, suitable for enclosures	**7ML1930-1AC**

[1] See Temperature restriction on page 4/14.

© Siemens 2020

Options

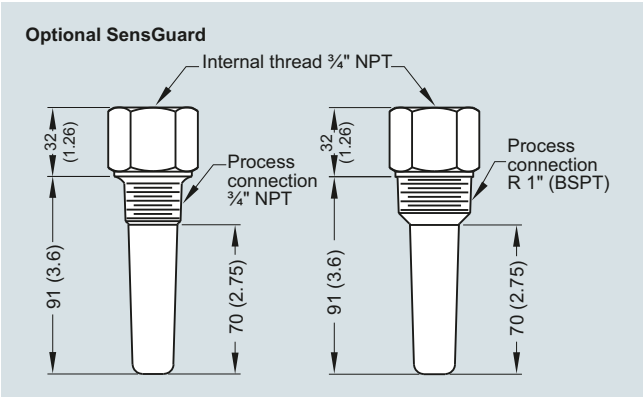

Optional SensGuard, dimensions in mm (inch)

© Siemens 2020

Characteristic curves

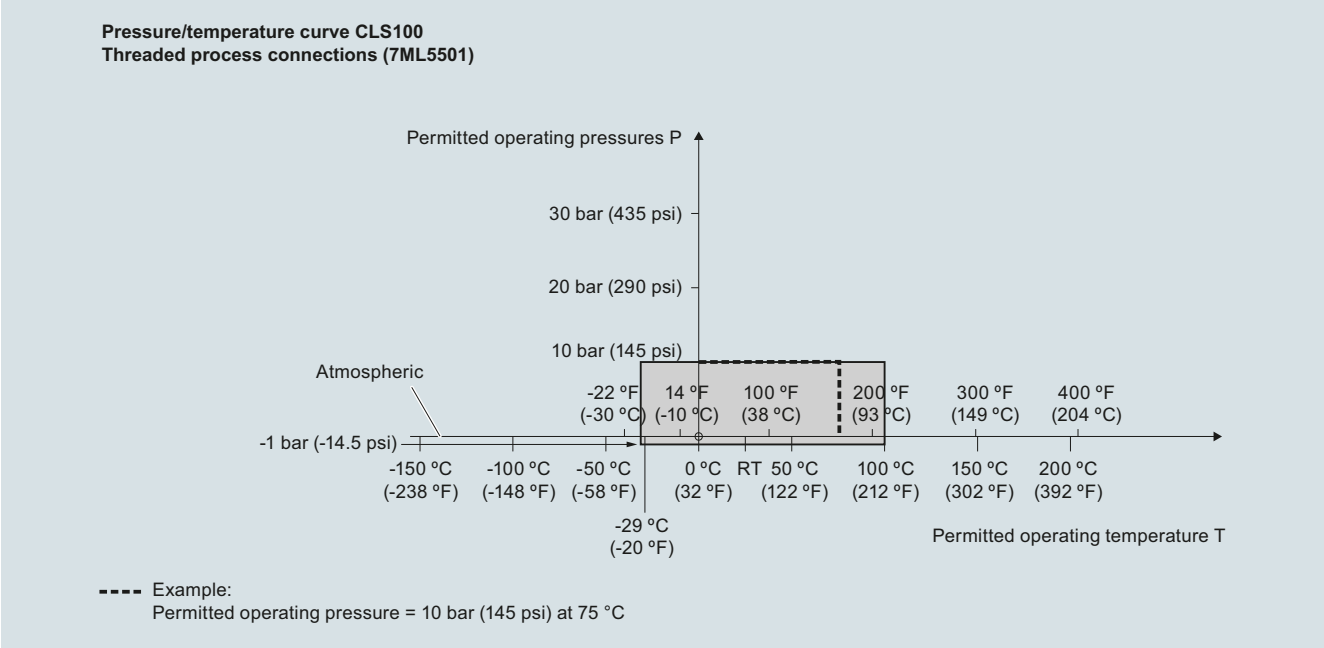

Pointek CLS100 process pressure/temperature derating curves

Dimensional drawings

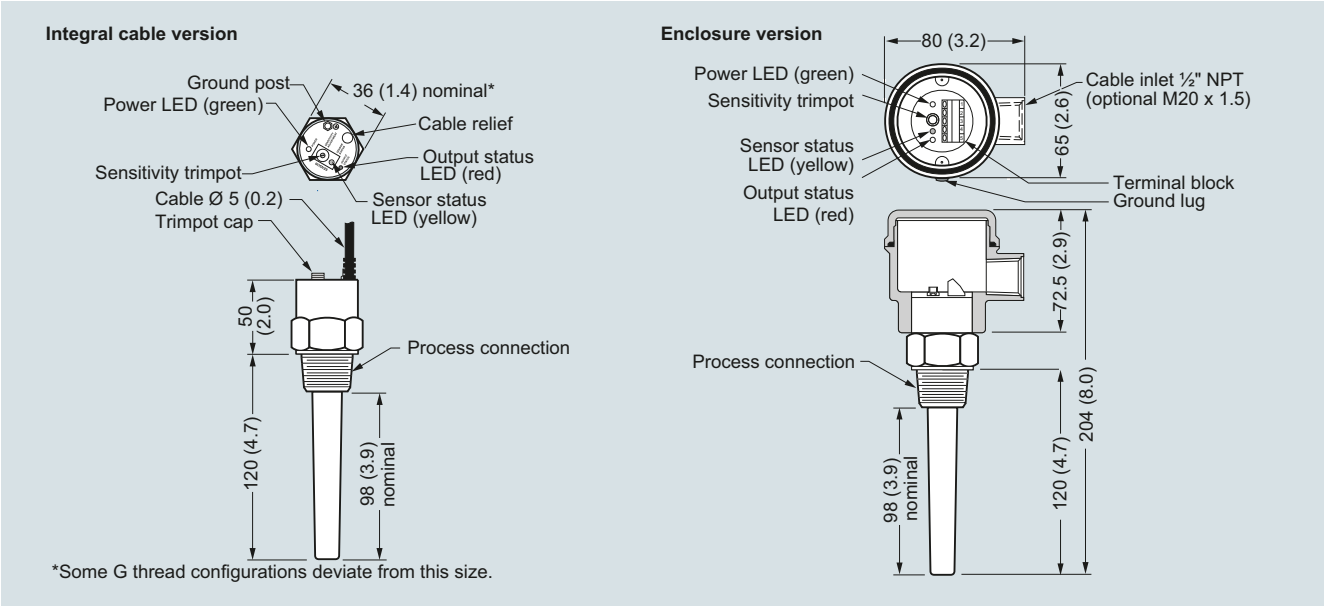

Pointek CLS100, dimensions in mm (inch)

© Siemens 2020

Circuit diagrams

Integral Cable Version - Non Intrinsically Safe only

LOW/HIGH Alarm

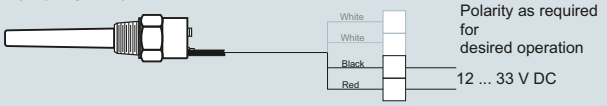

4/20 mA Loop Alarm

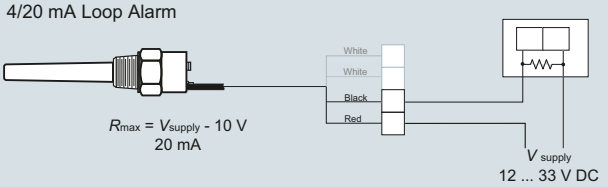

Solid State Switch Version

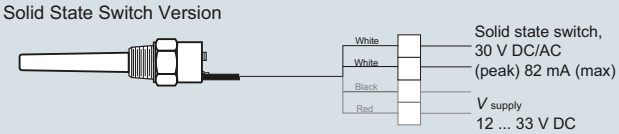

Enclosure and Fully Synthetic Version

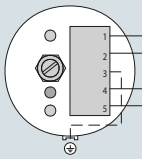

Terminal operations	Cable equivalent
mA current loop (+V or -V)	Red wire
mA current loop (+V or -V)	Black wire
ground	Cable shield
Solid state switch/relay*	White wire
Solid state switch/relay*	White wire

* Switch/relay normally open in unpowered state
* Relay not available on Pointek CLS100 IS version (7ML5501)

Note:
When driving an inductive load (for example, an external relay), a protection diode must be connected in the correct polarity to prevent possible switch damage due to inductive spikes generated by switching the inductor (please refer to instruction manual). Intrinsically Safe Models - please follow local regulations and area classifications; refer to instruction manual for more details.

Pointek CLS100 connections

© Siemens 2020

Overview

Pointek CLS200 (standard version) is a versatile inverse frequency shift capacitance level and material detection switch with optional rod/cable choices and configurable output. CLS200 is ideal for detection of liquids, solids, slurries, foam, and interfaces and has the ability to tune out buildup on the probe.

Benefits

- Potted construction protects signal circuit from shock, vibration, humidity, and/or condensation
- High chemical resistance
- Level detection independent of tank or pipe earth reference
- Insensitive to product buildup due to high frequency oscillation
- 3 LED indicators for sensor status, output status, and power
- Suitable for API 2350

Application

Pointek CLS200 standard version has 3 LED indicators with basic relay and solid-state switch alarms. Universal switch for solids/liquids and interface.

The power supply is galvanically isolated and accepts a wide range of voltages (12 to 250 V AC/DC). When used with thermal isolator, the stainless steel and PPS (PVDF optional) materials used in the probe construction provide a temperature rating up to 125 °C (257 °F) on the process wetted portion of the probe. The switch responds to any material with a dielectric constant of 1.5 or more by detecting a change in oscillating frequency, and it can be set to detect before contact or on contact with the probe. The CLS200 operates independently of the tank wall or pipe so it does not require an external reference electrode for level detection in a non-conductive vessel such as concrete or plastic (EMC regulations applicable in some regions).

- Key Applications: liquids, slurries, powders, granules, pressurized applications, hazardous areas

Configuration

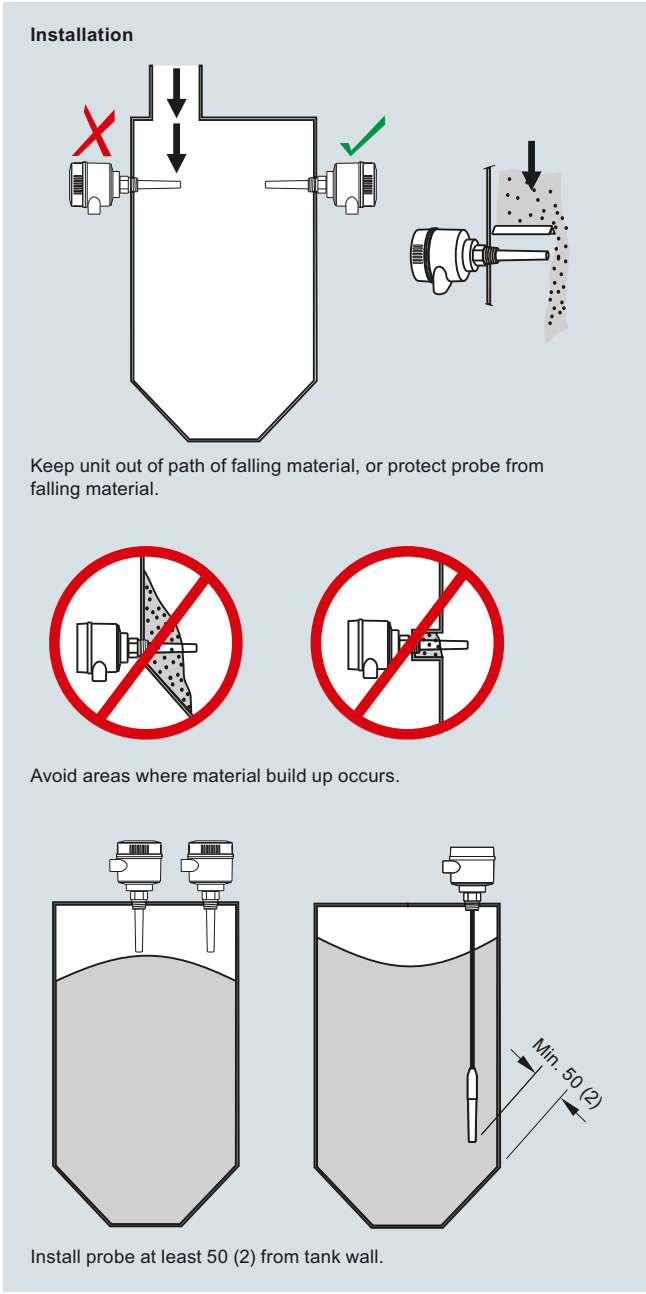

Pointek CLS200 installation, dimensions in mm (inch)

© Siemens 2020

Technical specifications

Mode of operation	
Measuring principle	Inverse frequency shift capacitive level detection
Input	
Measured variable	Change in picoFarad (pF)
Output	
Output signal	
• Relay output	1 SPDT Form C relay
- Max. contact voltage	• 30 V DC • 250 V AC
- Max. contact current	• 5 A DC • 8 A AC
- Max. switching capacity	150 W DC 2 000 VA AC
- Time delay (ON and/or OFF)	1 ... 60 s
• Solid-state output	
- Output	Galvanically isolated
- Protection	Against reversed polarity (bipolar)
- Max. switching voltage	• 30 V DC • 30 V peak AC
- Max. load current	82 mA
- Voltage drop	< 1 V, typical at 50 mA
- Time delay (pre or post switching)	1 ... 60 s
Rated operating conditions[1]	
Installation conditions	
• Location	Indoor/outdoor
Ambient conditions	
• Ambient temperature	-40 ... +85 °C (-40 ... +185 °F)[2]
• Storage temperature	-40 ... +85 °C (-40 ... +185 °F)
• Installation category	II
• Pollution degree	4
Medium conditions	Liquids, bulk solids, slurries and interfaces
• Relative dielectric constant ε_r	Min. 1.5
• Process temperature	
- Without thermal isolator	-40 ... +85 °C (-40 ... +185 °F)[2]
- With thermal isolator	-40 ... +125 °C (-40 ... +257 °F)
• Process pressure (rod version)	-1 ... +25 bar g (-14.6 ... +365 psi g) (nominal)
• Process pressure (cable version)[3]	-1 ... +10 bar g (-14.6 ... +150 psi g) (nominal)
• Process pressure (sliding coupling version)	-1 ... +10 bar g (-14.6 ... +150 psi g) (nominal)
Electromagnetic compatibility	To comply with CE EMC regulations (where applicable); the CLS200 should be installed per the instruction manual.

Design	
Material	
• Enclosure	Epoxy-coated aluminum with gasket
• Optional thermal isolator	316L stainless steel
Connection	Removable terminal block, max. 2.5mm²
Degree of protection	IP65/Type 4/NEMA 4 (optional IP68)
Cable inlet	2 x M20 x 1.5 thread (option: 2 x ½" NPT conduit entry including 1 plugged entry)
Power supply	12 ... 250 V AC/DC, 0 ... 60 Hz max. 2 W
Certificates and approvals	
General Purpose	CSA, FM, CE, RCM
Dust Ignition Proof	ATEX II ½ D T100 °C
Flameproof Enclosure With IS Probe	ATEX II 1 G EEx d[ia] IIC T6 ... T4 ATEX II ½ D T100 °C
Dust Ignition Proof with IS Probe	CSA/FM Class II, Div. 1, Groups E, F, G CSA/FM Class III T4
Explosion Proof Enclosure With IS Probe	CSA/FM Class I, Div. 1, Groups A, B, C, D CSA/FM Class II, Div. 1, Groups E, F, G CSA/FM Class III T4
Marine	Lloyds Register of Shipping, Categories ENV1, ENV2, and ENV5
Overfill Protection	WHG (Germany) VLAREM II
Others	Pattern Approval (China), SIL

1) When operation is in areas classified as hazardous, observe restrictions according to relevant certificate. See also Pressure/Temperature curves on page 5/34.

2) Thermal isolator is used if process connection temperature exceeds 85 °C (185 °F)

3) Pressure rating of process seal is temperature dependent. See Pressure/Temperature curves on page 5/34.

© Siemens 2020

Technical specifications (continued)

Design: Probe				
	Rod version	**Sanitary version**	**Cable version**	**Sliding Coupling version**
Max. length	5 500 mm (216.53 inch)	5 500 mm (216.53 inch)	• 30 000 mm (1 181.1 inch) liquids and slurries • 5 000 mm (196.85 inch) solids (under loads)	5 500 mm (216.53 inch)
Process connection	R ¾", 1", 1¼", 1½" [(BSPT), EN 10226/PT (JIS-T), JIS B 0203]	1½", 2" sanitary fitting clamp 316L stainless steel	R ¾", 1", 1¼", 1½" [(BSPT), EN 10226/PT (JIS-T), JIS B 0203]	R ¾", 1", 1¼", 1½" [(BSPT), EN 10226/PT (JIS-T), JIS B 0203]
	¾", 1", 1¼", 1½" NPT [(Taper), ANSI/ASME B1.20.1]		¾", 1", 1¼", 1½" NPT [(Taper), ANSI/ASME B1.20.1]	¾", 1", 1¼", 1½" NPT [(Taper), ANSI/ASME B1.20.1]
	G ¾", 1", 1½" [(BSPP), EN ISO 228-1/PF (JIS-P), JIS B 0202]		G ¾", 1", 1½" [(BSPP), EN ISO 228-1/PF (JIS-P), JIS B 0202]	G ¾", 1", 1½" [(BSPP), EN ISO 228-1/PF (JIS-P), JIS B 0202]
	316L stainless steelASME/EN flange		316L stainless steel ASME/EN flange	
Extension material	316L stainless steel optional PFA coated[1)]	316L stainless steel	Fluoroethylene propylene (FEP) cable with stainless steel core	316L stainless steel
Sensor wetted parts	PPS (optional PVDF)	PPS (optional PVDF)	PPS (optional PVDF)	PPS (optional PVDF)
O-ring seal material	FKM (optional FFKM)[2)]	FKM (optional FFKM)[2)]	FKM (optional FFKM)[2)]	FKM (optional FFKM)[2)]
Thermal isolator[3)]	Optional	Optional	Optional	Optional
Extension	User selected length	User selected length	Cable extension	User selected length

1) PFA coating (7ML5634 and 7ML5644) has 120 micron thickness

2) For caustic materials, consult a local sales person for alternative O-rings. For more information, please visit http://www.automation.siemens.com/aspa_app.

3) Thermal isolator is used if process connection temperature exceeds 85 °C (185 °F)

© Siemens 2020

Selection and ordering data

	Article No.
Pointek CLS200 RF Capacitance point level switch, rod design ↗	**7ML5630-** ■ ■ ■ ■ ■ - ■ ■ ■ **0**
Detects level and interface in liquids, solids, slurries, and foam. Adjustable, 5.5 m (18.04 ft), insertion, adaptable sensitivity, with the ability to tune out build-up on probe.	
↗ Click on the Article No. for the online configuration in the PIA Life Cycle Portal.	
Process connection	
Threaded, 316L stainless steel	
¾" NPT [(Taper), ANSI/ASME B1.20.1]	**0 A**
1" NPT [(Taper), ANSI/ASME B1.20.1]	**0 B**
1¼" NPT [(Taper), ANSI/ASME B1.20.1]	**0 C**
1½" NPT [(Taper), ANSI/ASME B1.20.1]	**0 D**
R ¾" [(BSPT), EN 10226/PT (JIS-T), JIS B 0203]	**1 A**
R 1" [(BSPT), EN 10226/PT (JIS-T), JIS B 0203]	**1 B**
R 1½" [(BSPT), EN 10226/PT (JIS-T), JIS B 0203]	**1 D**
G ¾" [(BSPP), EN SO 228-1/PF (JIS-P), JIS B 0202]	**3 A**
G 1" [(BSPP), EN ISO 228-1/PF (JIS-P), JIS B 0202]	**3 B**
G 1½" [(BSPP), EN ISO 228-1/PF (JIS-P), JIS B 0202]	**3 D**
Welded flange, 316L stainless steel, raised face	
1" ASME, 150 lb	**5 A**
1" ASME, 300 lb	**5 B**
1" ASME, 600 lb	**5 C**
1½" ASME, 150 lb	**5 D**
1½" ASME, 300 lb	**5 E**
1½" ASME, 600 lb	**5 F**
2" ASME, 150 lb	**5 G**
2" ASME, 300 lb	**5 H**
2" ASME, 600 lb	**5 J**
3" ASME, 150 lb	**5 K**
3" ASME, 300 lb	**5 L**
3" ASME, 600 lb	**5 M**
4" ASME, 150 lb	**5 N**
4" ASME, 300 lb	**5 P**
4" ASME, 600 lb	**5 Q**
Welded flange, 316L stainless steel, Type A flat faced	
DN 25, PN 16	**6 A**
DN 25, PN 40	**6 B**
DN 40, PN 16	**6 C**
DN 40, PN 40	**6 D**
DN 50, PN 16	**6 E**
DN 50, PN 40	**6 F**
DN 80, PN 16	**6 G**
DN 80, PN 40	**6 H**
DN 100, PN 16	**6 J**
DN 100, PN 40	**6 K**
(Note: Flange bolting patterns and facings dimensionally correspond to the applicable ASME B16.5 or EN 1092-1 standard.)	
Probe length	
(length from flange face) (threaded lengths include process thread)	
Note: No Y01 needed in Order code for standard lengths	
Compact [threaded 120 mm (4.72 inch), Flanged 98 mm (3.86 inch)]	**A**
Extended rod, 250 mm (9.84 inch)	**B**
Extended rod, 350 mm (13.78 inch)	**C**
Extended rod, 500 mm (19.69 inch)	**D**
Extended rod, 750 mm (29.53 inch)	**E**
Extended rod, 1 000 mm (39.37 inch)	**F**
Extended rod, 1 250 mm (49.21 inch)	**G**
Extended rod, 1 350 mm (53.15 inch)	**H**
Extended rod, 1 500 mm (59.06 inch)	**J**
Extended rod, 1 750 mm (68.90 inch)	**K**
Extended rod, 2 000 mm (78.74 inch)	**L**

	Article No.
Pointek CLS200 RF Capacitance point level switch, rod design	**7ML5630-** ■ ■ ■ ■ ■ - ■ ■ ■ **0**
Detects level and interface in liquids, solids, slurries, and foam. Adjustable, 5.5 m (18.04 ft), insertion, adaptable sensitivity, with the ability to tune out build-up on probe.	
Add Order code Y01 and plain text: "Insertion length ... mm"	
Extended rod, 210 ... 1 000 mm (8.27 ... 39.37 inch)	**M**
Extended rod, 1 001 ... 2 000 mm (39.41 ... 78.74 inch)	**N**
Extended rod, 2 001 ... 3 000 mm (78.78 ... 118.11 inch)	**P**
Extended rod, 3 001 ... 4 000 mm (118.15 ... 157.48 inch)	**Q**
Extended rod, 4 001 ... 5 000 mm (157.52 ... 196.85 inch)	**R**
Extended rod, 5 001 ... 5 500 mm (196.89 ... 216.53 inch)	**S**
Thermal isolator	
Without thermal isolator	**0**
With thermal isolator [for process connection temperatures over 85 °C (185 °F)]	**1**
Remote mount electronics and mounting bracket	
With 2 m (79 inch) of cable[1)2)]	**2**
With 5 m (197 inch) of cable[1)2)]	**3**
Wetted seals	
FKM	**0**
FFKM [for process temperatures above -20 °C (-4 °F)]	**1**
Probe material	
316L stainless steel with PPS probe body	**0**
316L stainless steel with PVDF probe body	**1**
Approvals	
Dust Ignition Proof:CE, RCM, ATEX II 1/2 D T100 °C	**C**
Flameproof Enclosure with IS Probe: CE, RCM, ATEX II 1 G EEx d[ia] IIC T6 ... T4, ATEX II 1/2 D T100 °C	**D**
Flameproof Enclosure with IS Probe, with WHG approval: CE, RCM, ATEX II 1/2 G EEx d[ia] IIC T6 ... T4, ATEX II 1/2 D T100 °C	**E**
Dust Ignition Proof with IS Probe: CSA/FM Class II, Div. 1, Groups E, F, G, CSA/FM Class III T4	**F**
Explosion Proof Enclosure with IS Probe:CSA/FM Class I, Div. 1, Groups A, B, C, D, CSA/FM Class II, Div. 1, Groups E, F, G, CSA/FM Class III T4	**G**
General Purpose (CSA, FM)	**H**
General Purpose (CE, RCM)	**J**
General Purpose (CSA, FM, CE, RCM) with WHG approval	**K**
Enclosure and lid	
Aluminum epoxy coated	
2 x ½" NPT via adapter - cable inlet, IP65	**A**
2 x M20 x 1.5 cable inlet, IP65	**B**
2 x ½" NPT via adapter - cable inlet, IP68	**C**
2 x M20 x 1.5 cable inlet IP68	**D**

1) Barrier or Intrinsically Safe power supply required for Intrinsically Safe protection.

2) Available with Approval options F, G, and H.

© Siemens 2020

Selection and ordering data

	Order code
Further designs	
Please add "**-Z**" to Article No. and specify Order code(s).	
Total insertion length: enter the total insertion length in plain text description	**Y01**
Stainless steel tag [70 x 13 mm (2.75 x 0.5 inch)]: Measuring-point number/identification (max. 27 characters) specify in plain text	**Y15**
Manufacturer's test certificate: M to DIN 55350, Part 18 and ISO 9000	**C11**
Material inspection Certificate Type 3.1 per EN 10204	**C12**
SIL/IEC 61508 Declaration of Conformity [SIL 2 (overspill)]	**C20**
INMETRO[1)]	**E34**
Operating Instructions	
All literature is available to download for free, in a range of languages, at	
http://www.siemens.com/processinstrumentation/documentation	
Accessories	See page **4/41**

1) Available only with Approvals options C, D, E.

	Article No.
Pointek CLS200 RF Capacitance point level switch, cable design ↗	**7ML5631-** ■ ■ ■ ■ ■ - ■ ■ ■ **0**
Detects level and interface in liquids, solids, slurries, and foam. Cable extension options to 30 m (98.43 ft), adaptable sensitivity, with the ability to tune out build-up on probe.	
↗ Click on the Article No. for the online configuration in the PIA Life Cycle Portal.	
Process connection	
Threaded, 316L stainless steel	
¾" NPT [(Taper), ANSI/ASME B1.20.1]	**0 A**
1" NPT [(Taper), ANSI/ASME B1.20.1]	**0 B**
1¼" NPT [(Taper), ANSI/ASME B1.20.1]	**0 C**
1½" NPT [(Taper), ANSI/ASME B1.20.1]	**0 D**
R ¾" [(BSPT), EN 10226/PT (JIS-T), JIS B 0203]	**1 A**
R 1" [(BSPT), EN 10226/PT (JIS-T), JIS B 0203]	**1 B**
R 1½" [(BSPT), EN 10226/PT (JIS-T), JIS B 0203]	**1 D**
G ¾" [(BSPP), EN ISO 228-1/PF (JIS-P), JIS B 0202]	**3 A**
G 1" [(BSPP), EN ISO 228-1/PF (JIS-P), JIS B 0202]	**3 B**
G 1½" [(BSPP), EN ISO 228-1/PF (JIS-P), JIS B 0202]	**3 D**
Welded flange, 316L stainless steel, raised face	
1" ASME, 150 lb	**5 A**
1" ASME, 300 lb	**5 B**
1" ASME, 600 lb	**5 C**
1½" ASME, 150 lb	**5 D**
1½" ASME, 300 lb	**5 E**
1½" ASME, 600 lb	**5 F**
2" ASME, 150 lb	**5 G**
2" ASME, 300 lb	**5 H**
2" ASME, 600 lb	**5 J**
3" ASME, 150 lb	**5 K**
3" ASME, 300 lb	**5 L**
3" ASME, 600 lb	**5 M**
4" ASME, 150 lb	**5 N**
4" ASME, 300 lb	**5 P**
4" ASME, 600 lb	**5 Q**
Welded flange, 316L stainless steel, Type A flat faced	
DN 25, PN 16	**6 A**
DN 25, PN 40	**6 B**
DN 40, PN 16	**6 C**
DN 40, PN 40	**6 D**
DN 50, PN 16	**6 E**
DN 50, PN 40	**6 F**
DN 80, PN 16	**6 G**
DN 80, PN 40	**6 H**
DN 100, PN 16	**6 J**
DN 100, PN 40	**6 K**
(Note: Flange bolting patterns and facings dimensionally correspond to the applicable ASME B16.5 or EN 1092-1 standard.)	

© Siemens 2020

Selection and ordering data

	Article No.
Pointek CLS200 RF Capacitance point level switch, cable design	**7ML5631-** ■ ■ ■ ■ ■ - ■ ■ ■ **0**
Detects level and interface in liquids, solids, slurries, and foam. Cable extension options to 30 m (98.43 ft), adaptable sensitivity, with the ability to tune out build-up on probe.	
Probe length	
(length from flange face) (threaded lengths include process thread)	
Note: No Y01 needed in Order code for standard lengths	
Extended cable, 3 000 mm (118.11 inch), length can be determined by customer on assembly[1]	**A**
Extended cable, 6 000 mm (236.22 inch), length can be determined by customer on assembly[1]	**B**
Add Order code Y01 and plain text: "Insertion length ... mm"	
Extended cable, 500 ... 5 000 mm (19.69 ... 196.85 inch)	**C**
Extended cable, 5 001 ... 10 00 mm (196.89 ... 393.70 inch)	**D**
Extended cable, 10 001 ... 15 000 mm (393.74 ... 590.55 inch)	**E**
Extended cable, 15 001 ... 20 000 mm (590.59 ... 787.4 inch)	**F**
Extended cable, 20 001 ... 25 000 mm (787.44 ... 984.25 inch)	**G**
Extended cable, 25 001 ... 30 000 mm (984.29 ... 1 181.1 inch)	**H**
Thermal isolator	
Without thermal isolator	**0**
With thermal isolator [for process connection temperatures over 85 °C (185 °F)]	**1**
Remote mount electronics and mounting bracket	
With 2 m (79 inch) of cable[2]	**2**
With 5 m (197 inch) of cable[2]	**3**
Wetted seals	
FKM and PTFE	**0**
FFKM and PTFE [for process temperatures above -20 °C) (-4 °F)]	**1**
Probe material	
FEP jacketed cable with PPS probe body	**0**
FEP jacketed cable with PVDF probe body	**1**
Approvals	
Dust Ignition Proof: CE, RCM, ATEX II 1/2 D T100 °C	**C**
Flameproof Enclosure with IS Probe: CE, RCM, ATEX II 1 G EEx d[ia] IIC T6 ... T4, ATEX II 1/2 D T100 °C	**D**
Flameproof Enclosure with IS Probe, with WHG approval: CE, RCM, ATEX II 1/2 G EEx d[ia] IIC T6 ... T4, ATEX II 1/2 D T100 °C	**E**
Dust Ignition Proof with IS Probe: CSA/FM Class II, Div. 1, Groups E, F, G, CSA/FM Class III T4	**F**
Explosion Proof Enclosure with IS Probe: CSA/FM Class I, Div. 1, Groups A, B, C, D, CSA/FM Class II, Div. 1, Groups E, F, G, CSA/FM Class III T4	**G**
General Purpose (CSA, FM)	**H**
General Purpose (CE, RCM)	**J**
General Purpose (CSA, FM, CE, RCM) with WHG approval	**K**
Enclosure and lid	
Aluminum epoxy coated	
2 x ½" NPT via adapter - cable inlet, IP65	**A**
2 x M20 x 1.5 cable inlet, IP65	**B**
2 x ½" NPT via adapter - cable inlet, IP68	**C**
2 x M20 x 1.5 cable inlet, IP68	**D**

[1] Sensor detached to allow customer to set desired cable length.
[2] Available with Approvals options F ... H.

	Order code
Further designs	
Please add "**-Z**" to Article No. and specify Order code(s).	
Total insertion length: enter the total insertion length in plain text description	**Y01**
Stainless steel tag [70 x 13 mm (2.75 x 0.5 inch)]: Measuring-point number/identification (max. 27 characters) specify in plain text	**Y15**
Manufacturer's test certificate: M to DIN 55350, Part 18 and ISO 9000	**C11**
Material inspection Certificate Type 3.1 per EN 10204	**C12**
SIL/IEC 61508 Declaration of Conformity [SIL 2 (overspill)]	**C20**
INMETRO[1]	**E34**
Operating Instructions	
All literature is available to download for free, in a range of languages, at	
http://www.siemens.com/processinstrumentation/documentation	
Accessories	See page **4/41**

[1] Available only with Approvals options C, D, E.

© Siemens 2020

Selection and ordering data

	Article No.									
Pointek CLS200 RF Capacitance point level switch, sanitary rod design ↗	**7ML5632-**									
Detects level and interface in liquids, solids, slurries, and foam. Adjustable, 5.5 m (18.04 ft), insertion, adaptable sensitivity, with the ability to tune out build-up on probe.	■	■	■	■	■	-	■	■	■	**0**
↗ Click on the Article No. for the online configuration in the PIA Life Cycle Portal.										
Process connection										
Sanitary 316L stainless steel										
1" sanitary fitting clamp	**8**	**A**								
1½" sanitary fitting clamp	**8**	**B**								
2" sanitary fitting clamp	**8**	**C**								
2½" sanitary fitting clamp	**8**	**D**								
3" sanitary fitting clamp (Note: Sanitary connection dimensionally corresponds to the applicable ISO 2852 standard)	**8**	**E**								
Probe length										
(length from process connection face)										
Note: No Y01 needed in Order code for standard lengths										
Compact, 98 mm (3.86 inch)			**A**							
Extended rod, 250 mm (9.84 inch)			**B**							
Extended rod, 350 mm (13.78 inch)			**C**							
Extended rod, 500 mm (19.69 inch)			**D**							
Extended rod, 750 mm (29.53 inch)			**E**							
Extended rod, 1 000 mm (39.37 inch)			**F**							
Extended rod, 1 250 mm (49.21 inch)			**G**							
Extended rod, 1 350 mm (53.15 inch)			**H**							
Extended rod, 1 500 mm (59.06 inch)			**J**							
Extended rod, 1 750 mm (68.90 inch)			**K**							
Extended rod, 2 000 mm (78.74 inch)			**L**							
Add Order code Y01 and plain text: "Insertion length ... mm"										
Extended rod, 110 ... 350 mm (4.3 ... 13.78 inch)			**M**							
Extended rod, 351 ... 1 000 mm (13.78 ... 39.37 inch)			**N**							
Extended rod, 1 001 ... 2 000 mm (39.41 ... 78.74 inch)			**P**							
Extended rod, 2 001 ... 3 000 mm (78.78 ... 118.11 inch)			**Q**							
Extended rod, 3 001 ... 4 000 mm (118.15 ... 157.48 inch)			**R**							
Extended rod, 4 001 ... 5 000 mm (157.52 ... 196.85 inch)			**S**							
Extended rod, 5 001 ... 5 500 mm (196.89 ... 216.53 inch)			**T**							
Thermal isolator										
Thermal isolator				**0**						
With thermal isolator [for process connection temperatures over 85 °C (185 °F)]				**1**						
Remote mount electronics and mounting bracket										
Remote mount electronics and mounting bracket				**2**						
Remote mount electronics with 5 m (197 inch) of cable				**3**						
Wetted seals										
FKM					**0**					
FFKM [for process temperatures above -20 °C (-4 °F)]					**1**					
Probe material										
316L stainless steel with PPS probe body							**0**			
316L stainless steel with PVDF probe body							**1**			

	Article No.									
Pointek CLS200 RF Capacitance point level switch, sanitary rod design	**7ML5632-**									
Detects level and interface in liquids, solids, slurries, and foam. Adjustable, 5.5 m (18.04 ft), insertion, adaptable sensitivity, with the ability to tune out build-up on probe.	■	■	■	■	■	-	■	■	■	**0**
Approvals										
Dust Ignition Proof: CE, RCM, ATEX II ½ D T100 °C								**C**		
Flameproof Enclosure with IS Probe: CE, RCM, ATEX II 1 G EEx d[ia] IIC T6 ... T4, ATEX II ½ D T100 °C								**D**		
Flameproof Enclosure with IS Probe: CE, RCM, ATEX II 1 G EEx d[ia] IIC T6 ... T4, ATEX II ½ D T100 °C								**E**		
Flameproof Enclosure with IS Probe, with WHG approval: CE, RCM, ATEX II ½ G EEx d[ia] IIC T6 ... T4, ATEX II ½ D T100 °C								**F**		
Dust Ignition Proof with IS Probe: CSA/FM Class II, Div. 1, Groups E, F, G, CSA/FM Class III T4								**G**		
General Purpose (CSA, FM)								**H**		
General Purpose (CE, RCM)								**J**		
General Purpose (CSA, FM, CE, RCM) with WHG approval								**K**		
Enclosure and lid										
Aluminum epoxy coated										
2 x ½" NPT via adapter - cable inlet, IP65									**A**	
2 x M20 x 1.5 cable inlet, IP65									**B**	
2 x ½" NPT via adapter - cable inlet, IP68									**C**	
2 x M20 x 1.5 cable inlet, IP68									**D**	

Further designs	Order code
Please add "**-Z**" to Article No. and specify Order code(s).	
Total insertion length: enter the total insertion length in plain text description	**Y01**
Stainless steel tag [70 x 13 mm (2.75 x 0.5 inch)]: Measuring-point number/identification (max. 27 characters) specify in plain text	**Y15**
Manufacturer's test certificate: M to DIN 55350, Part 18 and ISO 9000	**C11**
Material inspection Certificate Type 3.1 per EN 10204	**C12**
SIL/IEC 61508 Declaration of Conformity [SIL 2 (overspill)]	**C20**
INMETRO[1)]	**E34**
Operating Instructions	
All literature is available to download for free, in a range of languages, at	

http://www.siemens.com/processinstrumentation/documentation

Accessories	See page **4/41**

[1)] Available only with Approvals options C, D, E.

© Siemens 2020

Selection and ordering data

	Article No.
Pointek CLS200 RF Capacitance point level switch, sliding coupling design ↗	**7ML5633-** ■ ■ ■ ■ ■ - ■ ■ ■ **0**
Detects level and interface in liquids, solids, slurries, and foam. Adjustable, 5.5 m (18.04 ft), insertion, adaptable sensitivity, with the ability to tune out build-up on probe.	
↗ Click on the Article No. for the online configuration in the PIA Life Cycle Portal.	
Process connection	
Threaded, 316L stainless steel	
¾" NPT [(Taper), ANSI/ASME B1.20.1]	**0 A**
1" NPT [(Taper), ANSI/ASME B1.20.1]	**0 B**
1¼" NPT [(Taper), ANSI/ASME B1.20.1]	**0 C**
1½" NPT [(Taper), ANSI/ASME B1.20.1]	**0 D**
R ¾" [(BSPT), EN 10226/PT (JIS-T), JIS B 0203]	**1 A**
R 1" [(BSPT), EN 10226/PT (JIS-T), JIS B 0203]	**1 B**
R 1½" [(BSPT), EN 10226/PT (JIS-T), JIS B 0203]	**1 D**
G ¾" [(BSPP), EN ISO 228-1/PF (JIS-P), JIS B 0202]	**3 A**
G 1" [(BSPP), EN ISO 228-1/PF (JIS-P), JIS B 0202]	**3 B**
G 1½" [(BSPP), EN ISO 228-1/PF (JIS-P), JIS B 0202]	**3 D**
Probe length	
(length from flange face) (threaded lengths include process thread)	
Note: No Y01 needed in Order code for standard lengths	
Extended rod, 350 mm (13.78 inch)	**C**
Extended rod, 500 mm (19.69 inch)	**D**
Extended rod, 750 mm (29.53 inch)	**E**
Extended rod, 1 000 mm (39.37 inch)	**F**
Extended rod, 1 250 mm (49.21 inch)	**G**
Extended rod, 1 350 mm (53.15 inch)	**H**
Extended rod, 1 500 mm (59.06 inch)	**J**
Extended rod, 1 750 mm (68.90 inch)	**K**
Extended rod, 2 000 mm (78.74 inch)	**L**
Add Order code Y01 and plain text: "Insertion length ... mm"	
Extended rod, 350 ... 1 000 mm (13.78 ... 39.37 inch)	**M**
Extended rod, 1 001 ... 2 000 mm (39.41 ... 78.74 inch)	**N**
Extended rod, 2 001 ... 3 000 mm (78.78 ... 118.11 inch)	**P**
Extended rod, 3 001 ... 4 000 mm (118.15 ... 157.48 inch)	**Q**
Extended rod, 4 001 ... 5 000 mm (157.52 ... 196.85 inch)	**R**
Extended rod, 5 001 ... 5 500 mm (196.89 ... 216.53 inch)	**S**
Thermal isolator	
Without thermal isolator	**0**
With thermal isolator [for process connection temperatures over 85 °C (185 °F)]	**1**
Remote mount electronics and mounting bracket	
With 2 m (79 inch) of cable[1)]	**2**
With 5 m (197 inch) of cable[1)]	**3**
Wetted seals	
FKM and PTFE	**0**
FFKM and PTFE [for process temperatures above -20 °C (-4 °F)]	**1**
Probe material	
316L stainless steel with PPS probe body	**0**
316L stainless steel with PVDF probe body	**1**

	Article No.
Pointek CLS200 RF Capacitance point level switch, sliding coupling design	**7ML5633-** ■ ■ ■ ■ ■ - ■ ■ ■ **0**
Detects level and interface in liquids, solids, slurries, and foam. Adjustable, 5.5 m (18.04 ft), insertion, adaptable sensitivity, with the ability to tune out build-up on probe.	
Approvals	
Dust Ignition Proof: CE, RCM, ATEX II 1/2 D T100 °C	**C**
Flameproof Enclosure with IS Probe: CE, RCM, ATEX II 1 G EEx d[ia] IIC T6 ... T4, ATEX II 1/2 D T100 °C	**D**
Flameproof Enclosure with IS Probe, with WHG approval: CE, RCM, ATEX II 1/2 G EEx d[ia] IIC T6 ... T4, ATEX II 1/2 D T100 °C	**E**
Dust Ignition Proof with IS Probe: CSA/FM Class II, Div. 1, Groups E, F, G CSA/FM Class III T4	**F**
Explosion Proof Enclosure with IS Probe: CSA/FM Class I, Div. 1, Groups A, B, C, D CSA/FM Class II, Div. 1, Groups E, F, G CSA/FM Class III T4	**G**
General Purpose (CSA, FM)	**H**
General Purpose (CE, RCM)	**J**
General Purpose (CSA, FM, CE, RCM) with WHG approval	**K**
Enclosure and lid	
Aluminum epoxy coated	
2 x ½" NPT via adapter - cable inlet, IP65	**A**
2 x M20 x 1.5 cable inlet, IP65	**B**
2 x ½" NPT via adapter - cable inlet, IP68	**C**
2 x M20 x 1.5 cable inlet, IP68	**D**

1) Available with Approvals options F ... H.

Further designs	Order code
Please add "**-Z**" to Article No. and specify Order code(s).	
Total insertion length: enter the total insertion length in plain text description	**Y01**
Stainless steel tag [70 x 13 mm (2.75 x 0.5 inch)]: Measuring-point number/identification (max. 27 characters) specify in plain text	**Y15**
Manufacturer's test certificate: M to DIN 55350, Part 18 and ISO 9000	**C11**
Material inspection Certificate Type 3.1 per EN 10204	**C12**
SIL/IEC 61508 Declaration of Conformity [SIL 2 (overspill)]	**C20**
INMETRO[1)]	**E34**
Operating Instructions	
All literature is available to download for free, in a range of languages, at	
http://www.siemens.com/processinstrumentation/documentation	
Accessories	See page **4/41**

1) Available only with Approval options C, D, E.

© Siemens 2020

Options

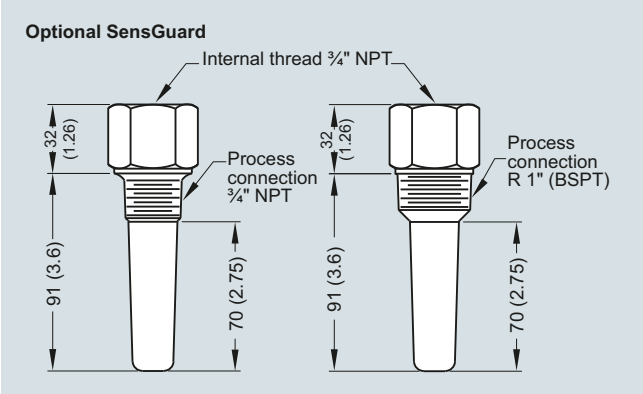

Optional SensGuard, dimensions in mm (inch)

Characteristic curves

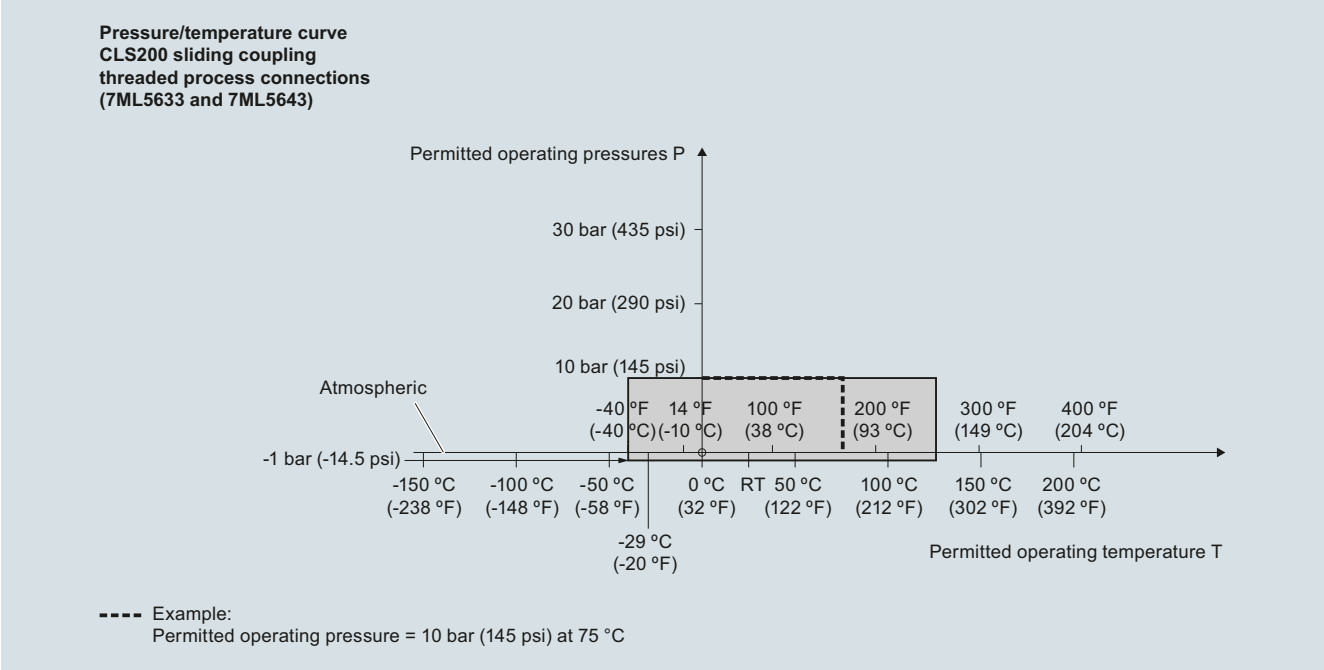

Pointek CLS200 process pressure/temperature derating curves (7ML5633 and 7ML5643)

© Siemens 2020

Characteristic curves (continued)

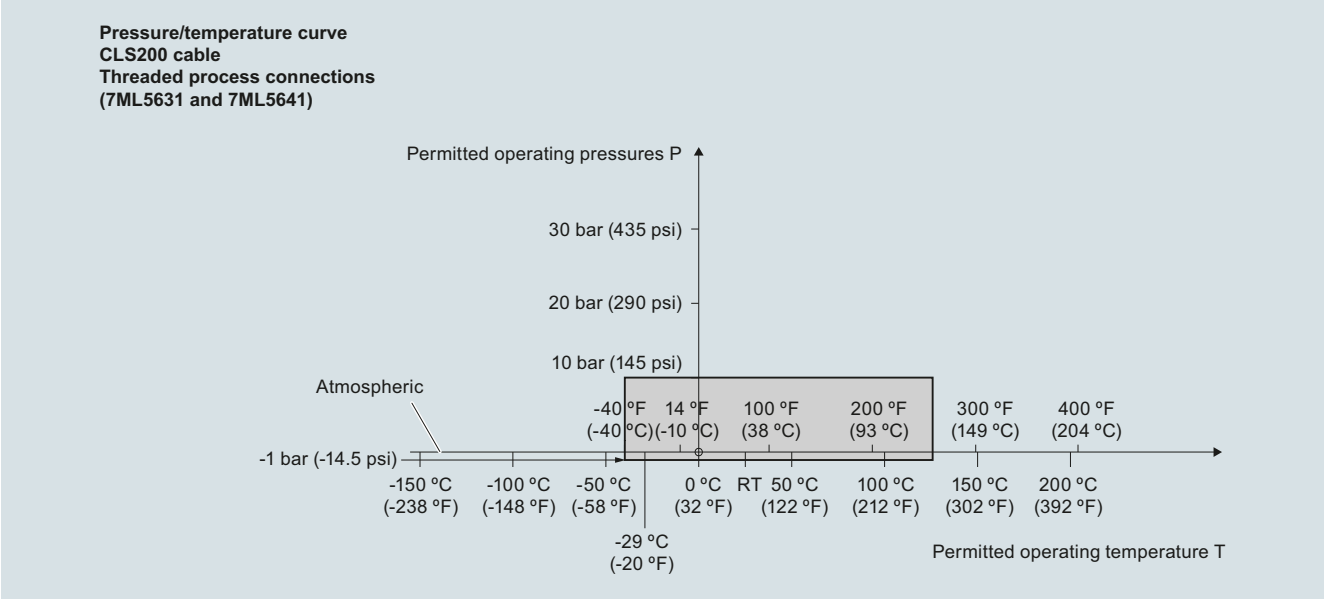

Pointek CLS200 process pressure/temperature derating curves (7ML5631 and 7ML5641)

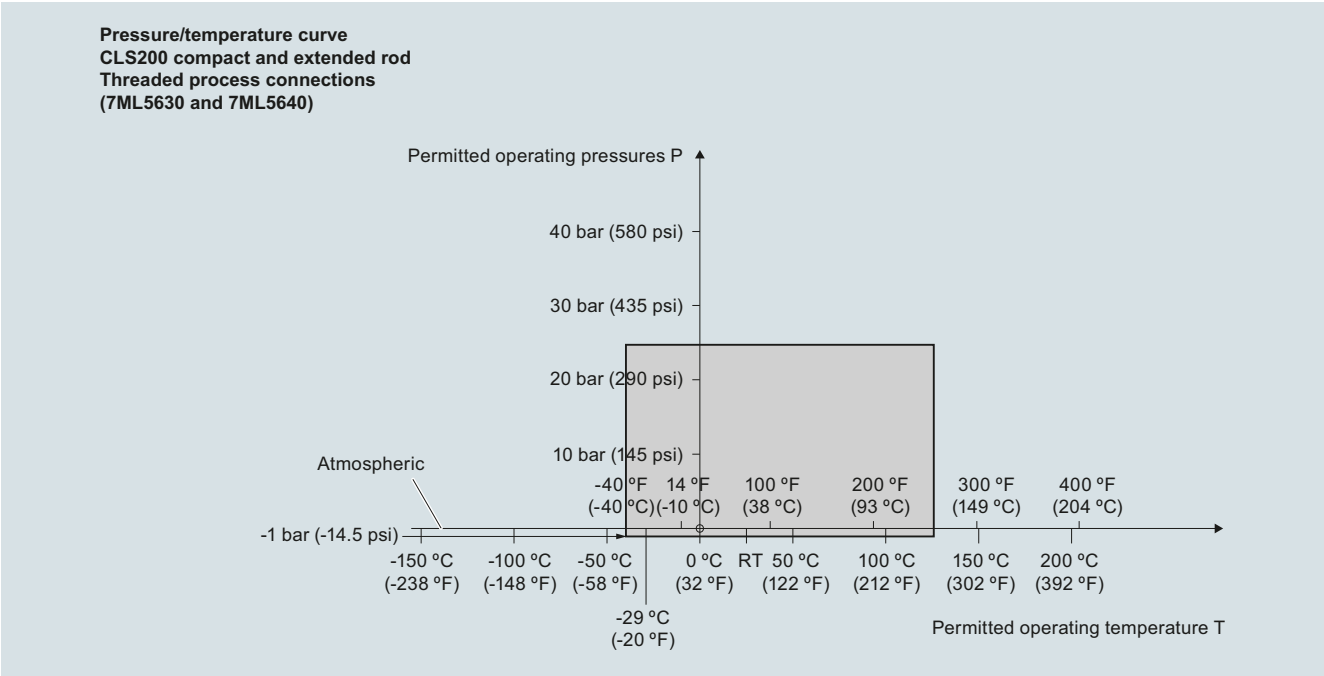

Pointek CLS200 process pressure/temperature derating curves (7ML5630 or 7ML5640)

© Siemens 2020

Characteristic curves (continued)

Pressure/temperature curve
CLS200 compact and extended sanitary type
Sanitary process connections
(7ML5632 and 7ML5642)

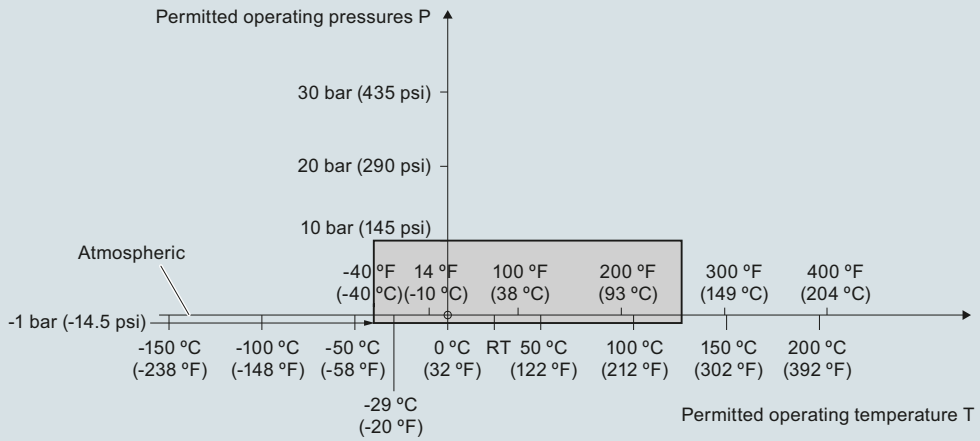

Pointek CLS200 process pressure/temperature derating curves (7ML5632 and 7ML5642)

Pressure/temperature curve
CLS200, cable
ASME flanged process connections
(7ML5631 and 7ML5641)

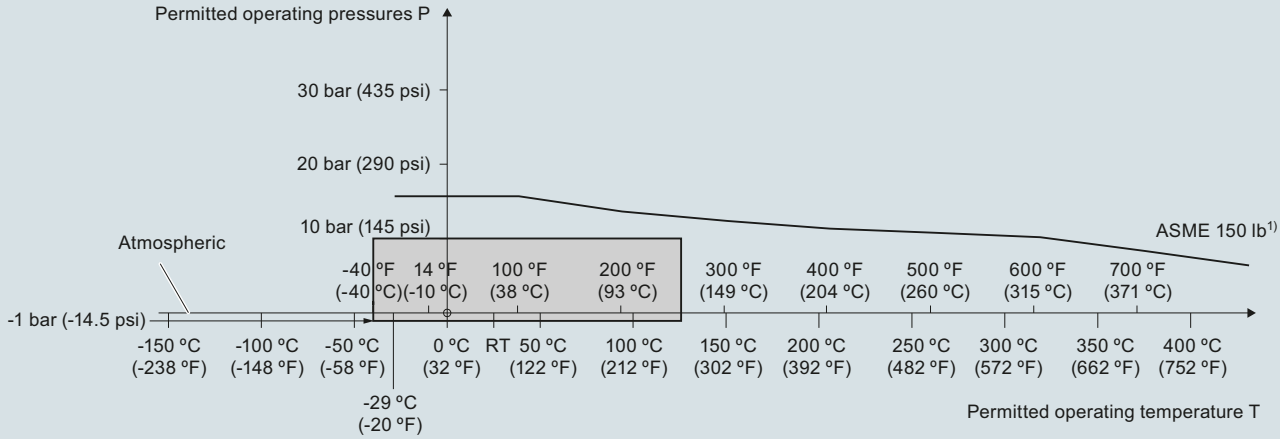

1) The curve denotes the minimum allowable flange class for the shaded area below.

Pointek CLS200 process pressure/temperature derating curves (7ML5631 and 7ML5641)

© Siemens 2020

Characteristic curves (continued)

Pressure/temperature curve
CLS200 compact and extended rod
ASME flanged process connections
(7ML5630 and 7ML5640)

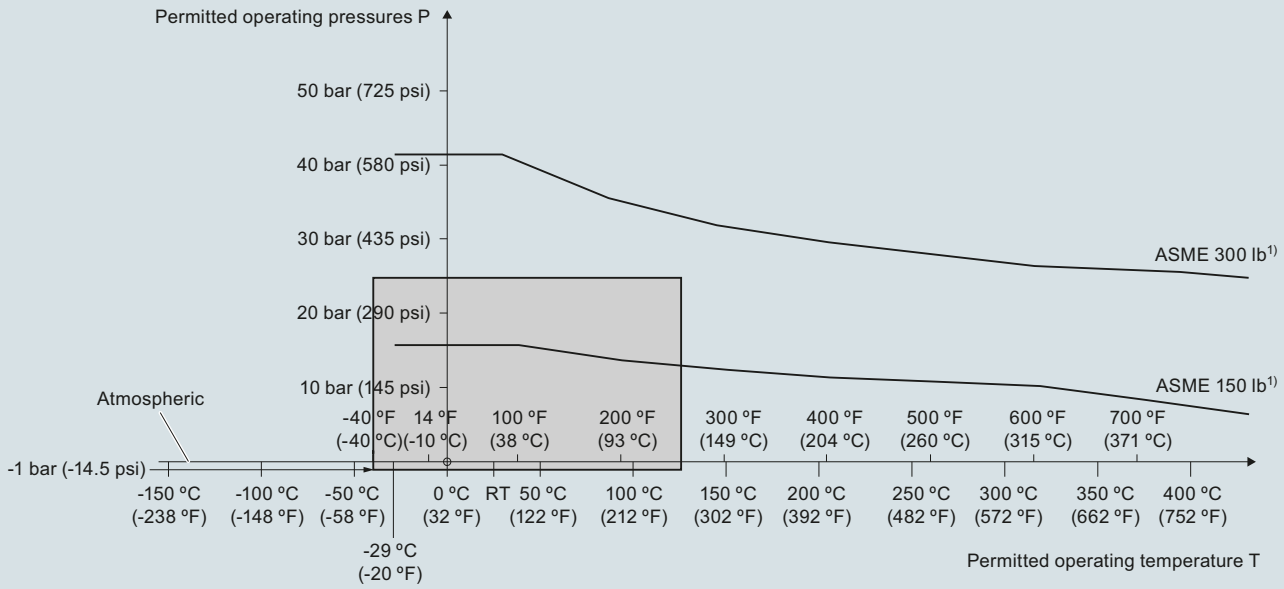

1) The curve denotes the minimum allowable flange class for the shaded area below.

Pointek CLS200 process pressure/temperature derating curves (7ML5630 and 7ML5640)

Pressure/temperature curve
CLS200 cable
EN flanged process connections
(7ML5631 and 7ML5641)

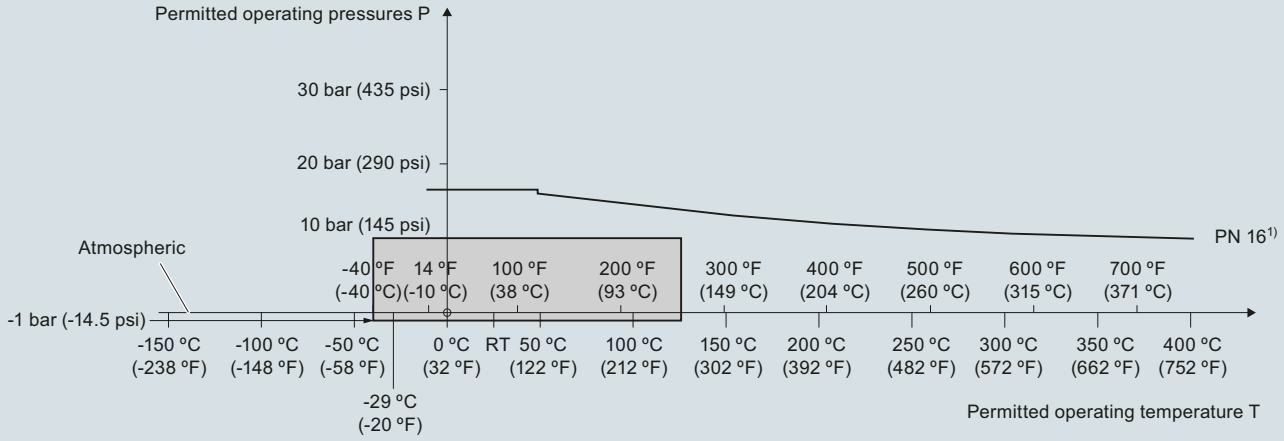

1) The curve denotes the minimum allowable flange class for the shaded area below.

Pointek CLS200 process pressure/temperature derating curves (7ML5631 and 7ML5641)

© Siemens 2020

Characteristic curves (continued)

Pressure/Temperature Curve
CLS200 Compact and Extended Rod
EN Flanged Process Connections
(7ML5630 and 7ML5640)

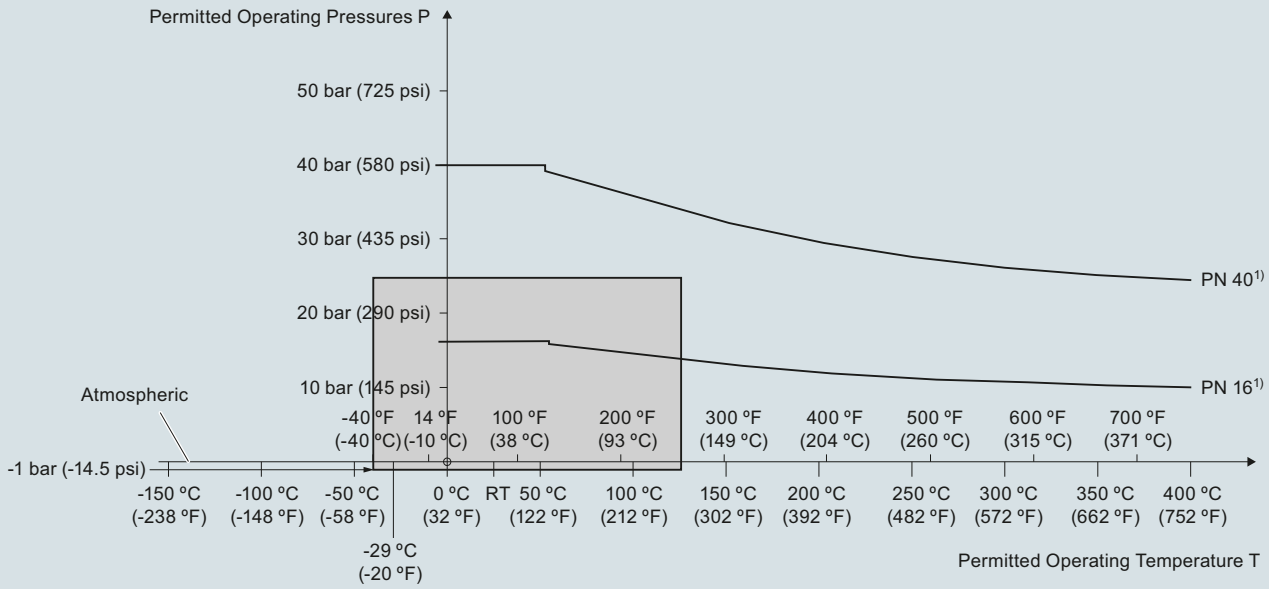

[1)] The curve denotes the minimum allowable flange class for the shaded area below.

Pointek CLS200 process pressure/temperature derating curves (7ML5630 and 7ML5640)

© Siemens 2020

Dimensional drawings

Compact version
Threaded
(7ML5630 and 7ML5640)

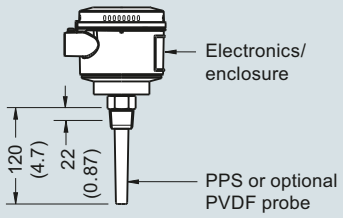

Extended rod version
Threaded
(7ML5630 and 7ML5640)

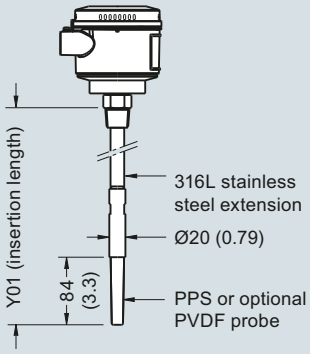

Min. insertion length = 200 (7.87)
Max. insertion length = 5 500 (216)

Extended cable version
Threaded
(7ML5631 and 7ML5641)

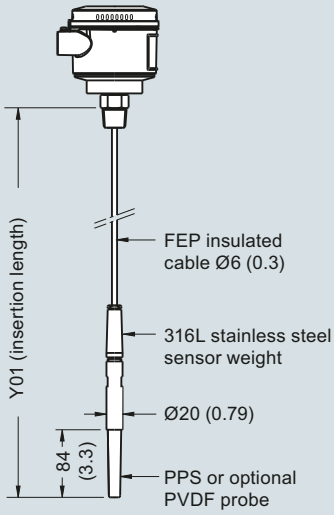

Min. insertion length = 500 (19.69)
Max. insertion length = 30 000 (1 181)
Applicable for liquids and solids applications. Cable can be shortened on site.

Sanitary compact version
Sanitary fitting
(7ML5632 and 7ML5642)

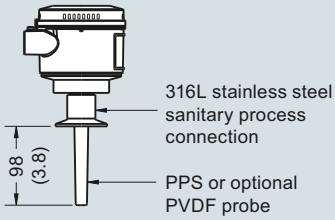

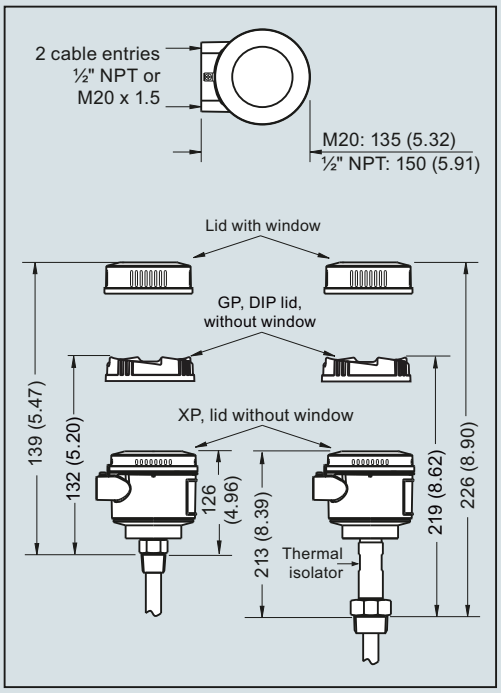

Sanitary extended version
Sanitary fitting
(7ML5632 and 7ML5642)

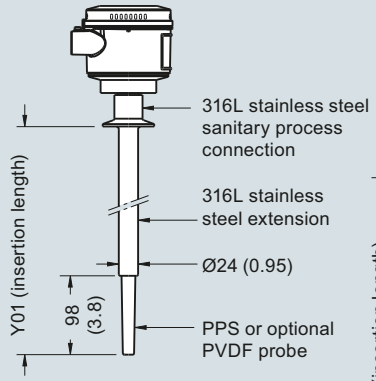

Min. insertion length = 110 (4.3)
Max. insertion length = 5 500 (216)

Sliding coupling version
Threaded
(7ML5633 and 7ML5643)

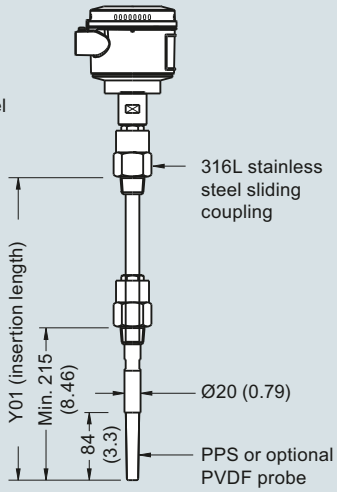

Min. insertion length = 350 (13.82)
Max. insertion length = 5 500 (216)

Pointek CLS200 threaded/sanitary process connection, dimensions in mm (inch)

© Siemens 2020

Dimensional drawings (continued)

Compact version
Welded Flange (7ML5630 and 7ML5640)
Welded Flange, PFA coated
(7ML5634 and 7ML5644)

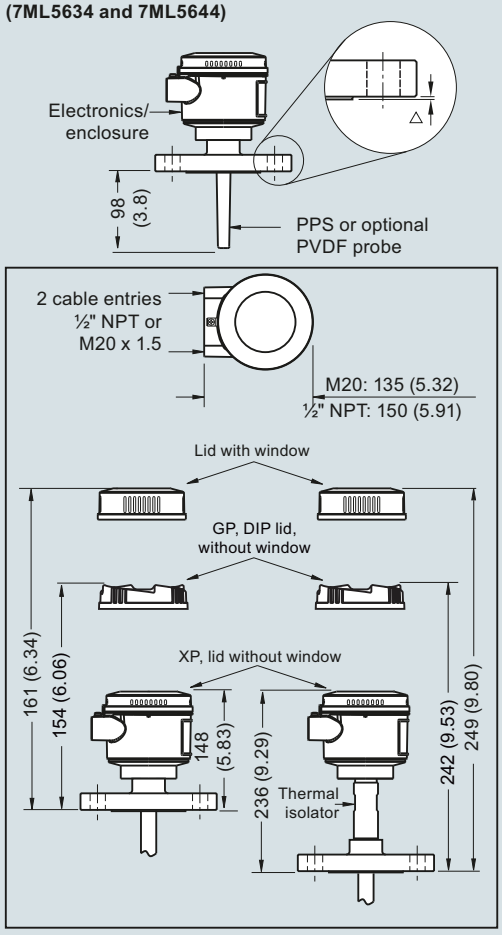

Extended rod version
Welded Flange (7ML5630 and 7ML5640)
Welded Flange, PFA coated
(7ML5634 and 7ML5644)

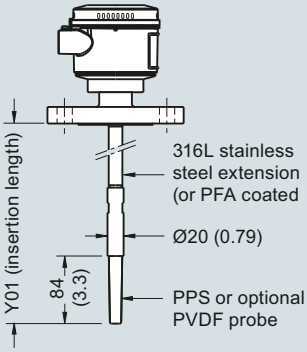

Min. insertion length = 200 (7.87)
Max. insertion length = 5 500 (216)

Extended cable version
Welded Flange
(7ML5631 and 7ML5641)

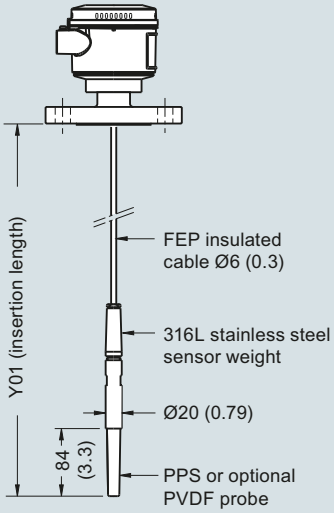

Min. insertion length = 500 (19.69)
Max. insertion length = 30 000 (1 181)
Applicable for liquids and solids applications. Cable can be shortened on site.

Flange Facing (raised face)	
Flange Class	**Facing thickness**
△ ASME 150/300	2 (0.08)
△ ASME 600/900	7 (0.28)
△ PN16/40	2 (0.08)

Insertion length does not include any raised face/gasket face dimension (see Flange Facing Table above)

Pointek CLS200 flanged process connections, dimensions in mm (inch)

© Siemens 2020

Circuit diagrams

Wiring: Pointek CLS200 standard

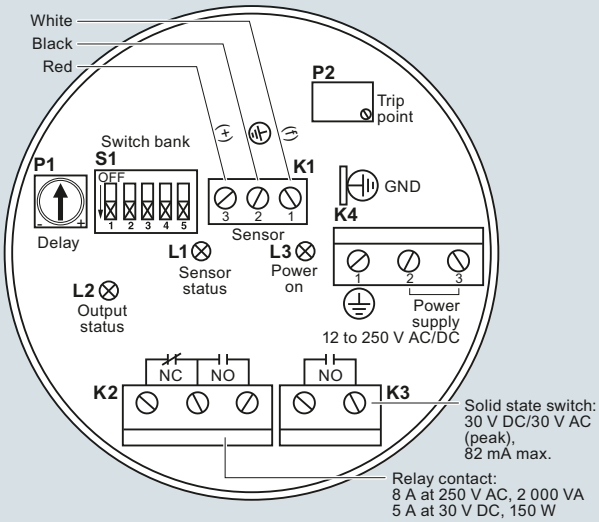

Notes:
- Identification label is on underside of lid. Switch and potentiometer settings are for illustration purposes only (refer to operation/setup in manual).
- All field wiring must have insulation suitable for at least 250 V.
- Relay contact terminals are for use with equipment having no accessible live parts and wiring having insulation suitable for at least 250 V.
- Maximum working voltage between adjacent relay contacts shall be 250 V.
- Refer to the Instruction Manual or contact Siemens representative for detailed wiring information.

Wiring: Pointek CLS200 Digital

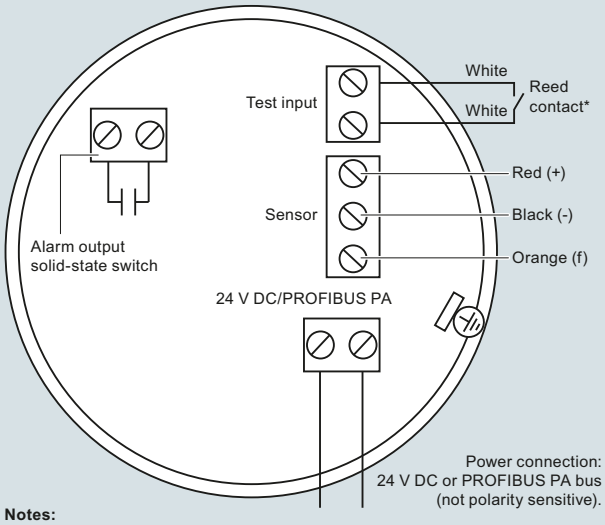

Notes:
Refer to the instruction manual or contact a Siemens representative for detailed wiring information.

***Magnet activated sensor Test**
A magnet can be used to test the sensor without opening the lid of the Pointek CLS200 Digital version. Bring the magnet close to the test area indicated on the enclosure. The sensor test starts and finishes automatically after 10 seconds.

Pointek CLS200 connections

© Siemens 2020

Overview

Pointek CLS200 (digital version) is a versatile inverse frequency shift capacitance level and material detection switch with optional rod/cable choices and configurable output. CLS200 is ideal for detection of liquids, solids, slurries, foam, and interfaces and has the ability to tune out buildup on the probe. The digital version includes PROFIBUS PA, an LCD display, and advanced diagnostic features.

Benefits

- Potted construction protects signal circuit from shock, vibration, humidity, and/or condensation
- High chemical resistance
- Level detection independent of tank or pipe earth reference
- Insensitive to product buildup due to high frequency oscillation
- High sensitivity allows installation in a wide range of liquids, solids or slurry applications
- Integral LCD display allows for easy menu-driven setup
- PROFIBUS PA communication (SIMATIC PDM compatible)

Application

Pointek CLS200 digital version provides an integral LCD display for stand-alone use, and also provides PROFIBUS PA communication (Profile version 3.0, Class B) for connection to a network.

The power supply is galvanically isolated and accepts a wide range of voltages (12 to 30 V DC). When used with thermal isolator, the stainless steel and PPS (PVDF optional) materials used in the probe construction provide a temperature rating up to 125 °C (257 °F) on the process wetted portion of the probe. The switch responds to any material with a dielectric constant of 1.5 or more by detecting a change in oscillating frequency, and it can be set to detect before contact or on contact with the probe. The menu-driven setup allows precise control of the switch point signal damping and alarm functions.

When connected to the PROFIBUS network, advanced diagnostics and set up using SIMATIC PDM are possible.

The CLS200 operates independently of the tank wall or pipe so it does not require an external reference electrode for level detection in a non-conductive vessel such as concrete or plastic (EMC regulations applicable in some regions).

- Key Applications: liquids, slurries, powders, granules, pressurized applications, hazardous areas

Configuration

Installation

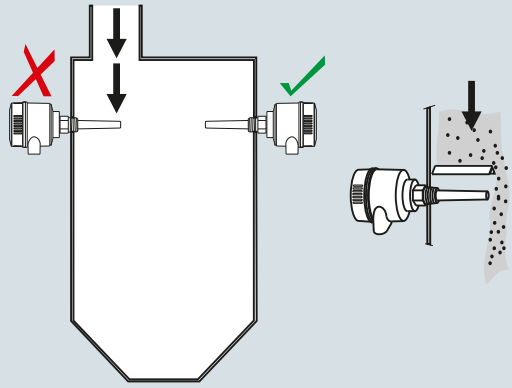

Keep unit out of path of falling material, or protect probe from falling material.

Avoid areas where material build up occurs.

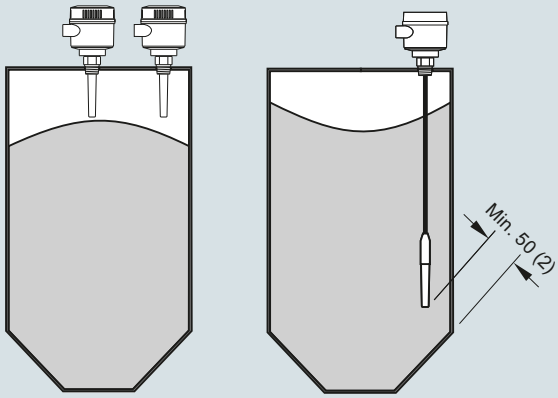

Install probe at least 50 (2) from tank wall.

Pointek CLS200 installation, dimensions in mm (inch)

© Siemens 2020

Technical specifications

Mode of operation	
Measuring principle	Inverse frequency shift capacitive level detection
Input	
Measured variable	Change in picoFarad (pF)
Output	
Output signal	
• Solid-state output	
- Output	Galvanically isolated
- Protection	Against reversed polarity (bipolar)
- Max. switching voltage	• 30 V (DC) • 30 V peak (AC)
- Max. load current	82 mA
- Voltage drop	< 1 V, typical at 50 mA
- Time delay (ON and/or OFF)	Programmable by user (0 ... 100 s)
• Fail-safe mode	Min. or max.
• Connection	Removable terminal block
Rated operating conditions[1]	
Installation conditions	
• Location	Indoor/outdoor
Ambient conditions	
• Ambient temperature	-40 ... +85 °C (-40 ... +185 °F)[2]
• Storage temperature	-40 ... +85 °C (-40 ... +185 °F)
• Installation category	II
• Pollution degree	4
Medium conditions	Liquids, bulk solids, slurries, and interfaces
• Relative dielectric constant ε_r	Min. 1.5
• Process temperature	
- Without thermal isolator	-40 ... +85 °C (-40 ... +185 °F)[2]
- With thermal isolator	-40 ... +125 °C (-40 ... +257 °F)
• Process pressure (rod version)	-1 ... +25 bar g (-14.6 ... +365 psi g) (nominal)
• Process pressure (cable version)[3]	-1 ... +10 bar g (-14.6 ... +150 psi g) (nominal)
• Process pressure (sliding coupling version)	-1 ... +10 bar g (-14.6 ... +150 psi g) (nominal)
Design	
Material	
• Enclosure	Epoxy-coated aluminum with gasket
• Optional thermal isolator	316L stainless steel
Connection	Removable terminal block, max. 2.5 mm²
Degree of protection	IP65/Type 4/NEMA 4 (optional IP68)
Cable inlet	2 x M20 x 1.5 thread (option: 2 x ½" NPT conduit entry including 1 plugged entry)
Electromagnetic compatibility	To comply with CE EMC regulations (where applicable); the CLS200 should be installed per the instruction manual.

Power supply	
Bus voltage	Standard: 12 ... 30 V DC Intrinsically Safe: 12 ... 24 V DC
Current consumption	12.5 mA
Certificates and approvals	
General Purpose	CSA, FM, CE, RCM
Dust Ignition Proof	ATEX II 1/2 D T100 °C
Dust Ignition Proof with IS Probe	CSA/FM Class II, Div. 1, Groups E, F, G CSA/FM Class III T4
Flameproof Enclosure with IS Probe	ATEX II 1/2 G EEx d[ia] IIC T6 ... T4 ATEX II ½ D T100 °C
Explosion Proof with IS Probe	CSA/FM Class I, Div. 1, Groups A, B, C, D CSA/FM Class II, Div. 1, Groups E, F, G CSA/FM Class III T4
Intrinsically Safe[4]	ATEX II 1 G EEx ia IIC T6 ... T4 ATEX II ½ D IP6X T100 °C CSA/FM Class I, Div. 1, Groups A, B, C, D CSA/FM Class II, Div. 1, Groups E, F, G CSA/FM Class III T4
Non-incendive	CSA/FM Class I, Div. 2, Groups A, B, C, D CSA/FM Class II, Div. 2, Groups F, G CSA/FM Class III T4 or T6
Non-Sparking	ATEX II 3 G Ex nA II T6 ... T4 ATEX II 2 D IP6X T100 °C
Marine	Lloyds Register of Shipping, Categories ENV1, ENV2, and ENV5
Others	Pattern Approval (China)
Communication	PROFIBUS PA (IEC 61158 CPF3 CP3/2) Bus physical layer: IEC 61158-2 MBP (IS) Device profile: PROFIBUS PA profile for Process Control Devices Version 3.0, Class B FISCO field device

1) When operation is in areas classified as hazardous, observe restrictions according to relevant certificate. See also Pressure/Temperature curves on page 5/36.

2) Thermal isolator is used if process connection temperature exceeds 85 °C (185 °F)

3) Pressure rating of process seal is temperature dependent. See Pressure/Temperature curves on page 5/34.

4) Barrier or Intrinsically Safe power supply required for Intrinsically Safe protection

© Siemens 2020

Technical specifications (continued)

Design: Probe				
	Rod version	**Sanitary version**	**Cable version**	**Sliding Coupling version**
Max. length	5 500 mm (216.53 inch)	5 500 mm (216.53 inch)	• 30 000 mm (1 181.1 inch) liquids and slurries • 5 000 mm (196.85 inch) solids (under loads)	5 500 mm (216.53 inch)
Process connection	R ¾", 1", 1¼", 1½" [(BSPT), EN 10226/PT (JIS-T), JIS B 0203] ¾", 1", 1¼", 1½" NPT [(Taper), ANSI/ASME B1.20.1] G ¾", 1", 1½" [(BSPP), EN ISO 228-1/PF (JIS-P), JIS B 0202] 316L stainless steel ASME/EN flange	1½", 2" sanitary fitting clamp 316L stainless steel	R ¾", ", 1¼", 1½" [(BSPT), EN 10226/PT (JIS-T), JIS B 0203] ¾", 1", 1¼", 1½" NPT [(Taper), ANSI/ASME B1.20.1] G ¾", 1", 1½" [(BSPP), EN ISO 228-1/PF (JIS-P), JIS B 0202] 316L stainless steel ASME/EN flange	R ¾", 1", 1¼", 1½" [(BSPT), EN 10226/PT (JIS-T), JIS B 0203] ¾", 1", 1¼", 1½" NPT [(Taper), ANSI/ASME B1.20.1] G ¾", 1", 1½" [(BSPP), EN ISO 228-1/PF (JIS-P), JIS B 0202]
Extension material	316L stainless steel optional PFA coated[1)]	316L stainless steel	Fluoroethylene propylene (FEP) cable with stainless steel core	316L stainless steel
Sensor wetted parts	PPS (optional PVDF)	PPS (optional PVDF)	PPS (optional PVDF)	PPS (optional PVDF)
O-ring seal material	FKM (optional FFKM)[2)]	FKM (optional FFKM)[2)]	FKM (optional FFKM)[2)]	FKM (optional FFKM)[2)]
Thermal isolator[3)]	Optional	Optional	Optional	Optional
Extension	User selected length	User selected length	Cable extension	User selected length

1) [1]PFA coating (7ML5634 and 7ML5644) has 120 micron thickness

2) For caustic materials, consult a local sales person for alternative O-rings. For more information, please visit http://www.automation.siemens.com/aspa_app.

3) Thermal isolator is used if process connection temperature exceeds 85 °C (185 °F).

© Siemens 2020

Selection and ordering data

	Article No.
Pointek CLS200 RF Capacitance point level switch, digital, rod design ↗	**7ML5640-** ■ ■ ■ ■ ■ - ■ ■ ■ 0
Detects level and interface in liquids, solids, slurries, and foam. Adjustable, 5.5 m (18.04 ft), insertion, adaptable sensitivity, with the ability to tune out build-up on probe. With display and digital communications.	
↗ Click on the Article No. for the online configuration in the PIA Life Cycle Portal.	
Process connection	
Threaded, 316L stainless steel	
¾" NPT [(Taper), ANSI/ASME B1.20.1]	0 A
1" NPT [(Taper), ANSI/ASME B1.20.1]	0 B
1¼" NPT [(Taper), ANSI/ASME B1.20.1]	0 C
1½" NPT [(Taper), ANSI/ASME B1.20.1]	0 D
R ¾" [(BSPT), EN 10226/PT (JIS-T), JIS B 0203]	1 A
R 1" [(BSPT), EN 10226/PT (JIS-T), JIS B 0203]	1 B
R 1½" [(BSPT), EN 10226/PT (JIS-T), JIS B 0203]	1 D
G ¾" [(BSPP), EN ISO 228-1/PF (JIS-P), JIS B 0202]	3 A
G 1" [(BSPP), EN ISO 228-1/PF (JIS-P), JIS B 0202]	3 B
G 1½" [(BSPP), EN ISO 228-1/PF (JIS-P), JIS B 0202]	3 D
Welded flange, 316L stainless steel, raised face	
1" ASME, 150 lb	5 A
1" ASME, 300 lb	5 B
1" ASME, 600 lb	5 C
1½" ASME, 150 lb	5 D
1½" ASME, 300 lb	5 E
1½" ASME, 600 lb	5 F
2" ASME, 150 lb	5 G
2" ASME, 300 lb	5 H
2" ASME, 600 lb	5 J
3" ASME, 150 lb	5 K
3" ASME, 300 lb	5 L
3" ASME, 600 lb	5 M
4" ASME, 150 lb	5 N
4" ASME, 300 lb	5 P
4" ASME, 600 lb	5 Q
Welded flange, 316L stainless steel, Type A flat faced	
DN 25, PN 16	6 A
DN 25, PN 40	6 B
DN 40, PN 16	6 C
DN 40, PN 40	6 D
DN 50, PN 16	6 E
DN 50, PN 40	6 F
DN 80, PN 16	6 G
DN 80, PN 40	6 H
DN 100, PN 16	6 J
DN 100, PN 40 (Note: flange bolting patterns and facings dimensionally correspond to the applicable ASME B16.5 or EN 1092-1 standard.)	6 K
Probe length	
(length from flange face) (threaded lengths include process thread)	
Note: No Y01 needed in Order code for standard lengths	
Compact [threaded 120 mm (4.72 inch), Flanged 98 mm (3.86 inch)]	A
Extended rod, 250 mm (9.84 inch)	B
Extended rod, 350 mm (13.78 inch)	C
Extended rod, 500 mm (19.69 inch)	D
Extended rod, 750 mm (29.53 inch)	E
Extended rod, 1 000 mm (39.37 inch)	F
Extended rod, 1 250 mm (49.21 inch)	G
Extended rod, 1 350 mm (53.15 inch)	H
Extended rod, 1 500 mm (59.06 inch)	J
Extended rod, 1 750 mm (68.90 inch)	K
Extended rod, 2 000 mm (78.74 inch)	L

	Article No.
Pointek CLS200 RF Capacitance point level switch, digital, rod design	**7ML5640-** ■ ■ ■ ■ ■ - ■ ■ ■ 0
Detects level and interface in liquids, solids, slurries, and foam. Adjustable, 5.5 m (18.04 ft), insertion, adaptable sensitivity, with the ability to tune out build-up on probe. With display and digital communications.	
Add Order code Y01 and plain text: "Insertion length ... mm"	
Extended rod, 210 ... 1 000 mm (8.27 ... 39.37 inch)	M
Extended rod, 1 001 ... 2 000 mm (39.41 ... 78.74 inch)	N
Extended rod, 2 001 ... 3 000 mm (78.78 ... 118.11 inch)	P
Extended rod, 3 001 ... 4 000 mm (118.15 ... 157.48 inch)	Q
Extended rod, 4 001 ... 5 000 mm (157.52 ... 196.85 inch)	R
Extended rod, 5 001 ... 5 500 mm (196.89 ... 216.53 inch)	S
Thermal isolator	
Without thermal isolator	0
With thermal isolator [for process connection temperatures over 85 °C (185 °F)]	1
Remote mount electronics and mounting bracket	
With 2 m (79 inch) of cable[2]	2
With 5 m (197 inch) of cable[2]	3
Wetted seals	
FKM	0
FFKM [for process temperatures above -20 °C (-4 °F)]	1
Probe material	
316L stainless steel with PPS probe body	0
316L stainless steel with PVDF probe body	1
Approvals	
Non-Sparking: CE, RCM, ATEX II 3 G Ex nA II T6 ... T4, ATEX II 2 D IP6X T100 °C	B
Dust Ignition Proof: CE, RCM, ATEX II ½ D T100 °C	C
Intrinsically Safe:[1] CE, RCM, ATEX II 1 G EEx ia IIC T6 ... T4, ATEX II ½ D IP6X T100 °C	D
Flameproof Enclosure with IS Probe: CE, RCM, ATEX II ½ G EEx d[ia] IIC T6 ... T4, ATEX II ½ D T100 °C	E
Non-incendive: CSA/FM Class I, Div. 2, Groups A, B, C, D CSA/FM Class II, Div. 2, Groups F, G CSA/FM Class III T4 or T6	F
Dust Ignition Proof with IS Probe: CSA/FM Class II, Div. 1, Groups E, F, G CSA/FM Class III T4	G
Intrinsically Safe:[1] CSA/FM Class I, Div. 1, Groups A, B, C, D CSA/FM Class II, Div. 1, Groups E, F, G CSA/FM Class III T4	H
Explosion Proof with IS Probe: CSA/FM Class I, Div. 1, Groups A, B, C, D CSA/FM Class II, Div. 1, Groups E, F, G CSA/FM Class III T4	J
General Purpose (CSA, FM)	K
General Purpose (CE, RCM)	L
Enclosure and lid	
Aluminum epoxy coated	
2 x ½" NPT via adapter - cable inlet, IP65	A
2 x M20 x 1.5 cable inlet, IP65	B
2 x ½" NPT via adapter - cable inlet, IP68	C
2 x M20 x 1.5 cable inlet, IP68	D

[1] Barrier or Intrinsically Safe power supply required for Intrinsically Safe protection.

[2] Available with Approvals options F, G, H, J, and K.

© Siemens 2020

Selection and ordering data

	Order code
Further designs	
Please add "**-Z**" to Article No. and specify Order code(s).	
Total insertion length: enter the total insertion length in plain text description	**Y01**
Stainless steel tag [70 x 13 mm (2.75 x 0.5 inch)]: Measuring-point number/identification (max. 27 characters) specify in plain text	**Y15**
Manufacturer's test certificate: M to DIN 55350, Part 18 and ISO 9000	**C11**
Material inspection certificate Type 3.1 per EN 10204	**C12**
INMETRO[1)]	**E34**
Operating Instructions	
All literature is available to download for free, in a range of languages, at	
http://www.siemens.com/processinstrumentation/documentation	
Accessories	See page 4/41

[1)] Available only with Approvals options C and E.

	Article No.
Pointek CLS200 RF Capacitance point level switch, digital, cable design ↗	**7ML5641-** ■ ■ ■ ■ ■ - ■ ■ ■ **0**
Detects level and interface in liquids, solids, slurries, and foam. Cable extension options to 30 m (98.43 ft), adaptable sensitivity, with the ability to tune out build-up on probe. With display and digital communications.	
↗ Click on the Article No. for the online configuration in the PIA Life Cycle Portal.	
Process connection	
Threaded, 316L stainless steel	
¾" NPT [(Taper), ANSI/ASME B1.20.1]	**0 A**
1" NPT [(Taper), ANSI/ASME B1.20.1]	**0 B**
1¼" NPT [(Taper), ANSI/ASME B1.20.1]	**0 C**
1½" NPT [(Taper), ANSI/ASME B1.20.1]	**0 D**
R ¾" [(BSPT), EN 10226/PT (JIS-T), JIS B 0203]	**1 A**
R 1" [(BSPT), EN 10226/PT (JIS-T), JIS B 0203]	**1 B**
R 1½" [(BSPT), EN 10226/PT (JIS-T), JIS B 0203]	**1 D**
G ¾" [(BSPP), EN ISO 228-1/PF (JIS-P), JIS B 0202]	**3 A**
G 1" [(BSPP), EN ISO 228-1/PF (JIS-P), JIS B 0202]	**3 B**
G 1½" [(BSPP), EN ISO 228-1/PF (JIS-P), JIS B 0202]	**3 D**
Welded flange, 316L stainless steel, raised face	
1" ASME, 150 lb	**5 A**
1" ASME, 300 lb	**5 B**
1" ASME, 600 lb	**5 C**
1½" ASME, 150 lb	**5 D**
1½" ASME, 300 lb	**5 E**
1½" ASME, 600 lb	**5 F**
2" ASME, 150 lb	**5 G**
2" ASME, 300 lb	**5 H**
2" ASME, 600 lb	**5 J**
3" ASME, 150 lb	**5 K**
3" ASME, 300 lb	**5 L**
3" ASME, 600 lb	**5 M**
4" ASME, 150 lb	**5 N**
4" ASME, 300 lb	**5 P**
4" ASME, 600 lb	**5 Q**
Welded flange, 316L stainless steel, Type A flat faced	
DN 25, PN 16	**6 A**
DN 25, PN 40	**6 B**
DN 40, PN 16	**6 C**
DN 40, PN 40	**6 D**
DN 50, PN 16	**6 E**
DN 50, PN 40	**6 F**
DN 80, PN 16	**6 G**
DN 80, PN 40	**6 H**
DN 100, PN 16	**6 J**
DN 100, PN 40	**6 K**
(Note: flange bolting patterns and facings dimensionally correspond to the applicable ASME B16.5 or EN 1092-1 standard.)	

© Siemens 2020

Selection and ordering data

	Article No.
Pointek CLS200 RF Capacitance point level switch, digital, cable design Detects level and interface in liquids, solids, slurries, and foam. Cable extension options to 30 m (98.43 ft), adaptable sensitivity, with the ability to tune out build-up on probe. With display and digital communications.	**7ML5641-** ■ ■ ■ ■ ■ - ■ ■ ■ **0**
Probe length	
(length from flange face) (threaded lengths include process thread)	
Note: No Y01 needed in Order code for standard lengths	
Extended cable, 3 000 mm (118.11 inch), length can be determined by customer on assembly	**A**
Extended cable, 6 000 mm (236.22 inch), length can be determined by customer on assembly	**B**
Add Order code Y01 and plain text: "Insertion length ... mm"	
Extended cable, 500 ... 5 000 mm (19.69 ... 196.85 inch)	**C**
Extended cable, 5 001 ... 10 000 mm (196.89 ... 393.70 inch)	**D**
Extended cable, 10 001 ... 15 000 mm (393.74 ... 590.55 inch)	**E**
Extended cable, 15 001 ... 20 000 mm (590.59 ... 787.40 inch)	**F**
Extended cable, 20 001 ... 25 000 mm (787.44 ... 984.25 inch)	**G**
Extended cable, 25 001 ... 30 000 mm (984.29 ... 1 181.10 inch)	**H**
Thermal isolator	
Without thermal isolator	**0**
With thermal isolator [for process connection temperatures over 85 °C (185 °F)]	**1**
Remote mount electronics and mounting bracket	
With 2 m (79 inch) of cable[2]	**2**
With 5 m (197 inch) of cable[2]	**3**
Wetted seals	
FKM and PTFE	**0**
FFKM and PTFE [for process temperatures above -20 °C (-4 °F)]	**1**
Probe material	
FEP jacketed cable with PPS probe body	**0**
FEP jacketed cable with PVDF probe body	**1**
Approvals	
Non-Sparking: CE, RCM, ATEX II 3 G Ex nA II T6 ... T4, ATEX II 2 D IP6X T100 °C	**B**
Dust Ignition Proof: CE, RCM, ATEX II ½ D T100 °C	**C**
Intrinsically Safe:[1] CE, RCM, ATEX II 1 G EEx ia IIC T6 ... T4, ATEX II ½ D IP6X T100 °C	**D**
Flameproof Enclosure with IS Probe: CE, RCM, ATEX II ½ G EEx d[ia] IIC T6 ... T4, ATEX II ½ D T100 °C	**E**
Non-incendive: CSA/FM Class I, Div. 2, Groups A, B, C, D CSA/FM Class II, Div. 2, Groups F, G CSA/FM Class III T4 or T6	**F**
Dust Ignition Proof with IS Probe: CSA/FM Class II, Div. 1, Groups E, F, G CSA/FM Class III T4	**G**
Intrinsically Safe:[1] CSA/FM Class I, Div. 1, Groups A, B, C, D CSA/FM Class II, Div. 1, Groups E, F, G CSA/FM Class III T4	**H**
Explosion Proof with IS Probe: CSA/FM Class I, Div. 1, Groups A, B, C, D CSA/FM Class II, Div. 1, Groups E, F, G CSA/FM Class III T4	**J**
General Purpose (CSA, FM)	**K**
General Purpose (CE, RCM)	**L**

	Article No.
Pointek CLS200 RF Capacitance point level switch, digital, cable design Detects level and interface in liquids, solids, slurries, and foam. Cable extension options to 30 m (98.43 ft), adaptable sensitivity, with the ability to tune out build-up on probe. With display and digital communications.	**7ML5641-** ■ ■ ■ ■ ■ - ■ ■ ■ **0**
Enclosure and lid	
Aluminum epoxy coated	
2 x ½" NPT via adapter - cable inlet, IP65	**A**
2 x M20 x 1.5 cable inlet, IP65	**B**
2 x ½" NPT via adapter - cable inlet, IP68	**C**
2 x M20 x 1.5 cable inlet, IP68	**D**

[1] Barrier or Intrinsically Safe power supply required for Intrinsically Safe protection.

[2] Available with Approvals options F, G, H, J, and K.

Further designs	Order code
Please add "**-Z**" to Article No. and specify Order code(s).	
Total insertion length: enter the total insertion length in plain text description	**Y01**
Stainless steel tag [70 x 13 mm (2.75 x 0.5 inch)]: Measuring-point number/identification (max. 27 characters) specify in plain text	**Y15**
Manufacturer's test certificate: M to DIN 55350, Part 18 and ISO 9000	**C11**
Material inspection Certificate Type 3.1 per EN 10204	**C12**
INMETRO[1]	**E34**
Operating Instructions	
All literature is available to download for free, in a range of languages, at	
http://www.siemens.com/processinstrumentation/documentation	
Accessories	See page 4/41

[1] Available only with Approvals options C and E.

© Siemens 2020

Selection and ordering data

	Article No.									
Pointek CLS200 RF Capacitance point level switch, digital, sanitary rod design. ↗	**7ML5642-**									
Detects level and interface in liquids, solids, slurries, and foam. Adjustable, 5.5 m (18.04 ft), insertion, adaptable sensitivity, with the ability to tune out build-up on probe. With display and digital communications.	■	■	■	■	■	-	■	■	■	**0**
↗ Click on the Article No. for the online configuration in the PIA Life Cycle Portal.										
Process connection										
Sanitary 316L stainless steel										
1" sanitary fitting clamp	**8**	**A**								
1½" sanitary fitting clamp	**8**	**B**								
2" sanitary fitting clamp	**8**	**C**								
2½" sanitary fitting clamp	**8**	**D**								
3" sanitary fitting clamp	**8**	**E**								
(Note: Sanitary connection dimensionally corresponds to the applicable ISO 2852 standard.)										
Probe length										
(length from process connection face)										
Note: No Y01 needed in Order code for standard lengths										
Compact, 98 mm (3.86 inch)			**A**							
Extended rod, 250 mm (9.84 inch)			**B**							
Extended rod, 350 mm (13.78 inch)			**C**							
Extended rod, 500 mm (19.69 inch)			**D**							
Extended rod, 750 mm (29.53 inch)			**E**							
Extended rod, 1 000 mm (39.37 inch)			**F**							
Extended rod, 1 250 mm (49.21 inch)			**G**							
Extended rod, 1 350 mm (53.15 inch)			**H**							
Extended rod, 1 500 mm (59.06 inch)			**J**							
Extended rod, 1 750 mm (68.90 inch)			**K**							
Extended rod, 2 000 mm (78.74 inch)			**L**							
Add Order code Y01 and plain text: "Insertion length ... mm"										
Extended rod, 110 ... 350 mm (4.3 ... 13.78 inch)			**M**							
Extended rod, 351 ... 1 000 mm (13.82 ... 39.37 inch)			**N**							
Extended rod, 1 001 ... 2 000 mm (39.41 ... 78.74 inch)			**P**							
Extended rod, 2 001 ... 3 000 mm (78.78 ... 118.11 inch)			**Q**							
Extended rod, 3 001 ... 4 000 mm (118.15 ... 157.48 inch)			**R**							
Extended rod, 4 001 ... 5 000 mm (157.52 ... 196.85 inch)			**S**							
Extended rod, 5 001 ... 5 500 mm (196.89 ... 216.53 inch)			**T**							
Thermal isolator										
Without thermal isolator				**0**						
With thermal isolator [for process connection temperatures over 85 °C (185 °F)]				**1**						
Remote mount electronics and mounting bracket										
With 2 m (79 inch) of cable[2]				**2**						
With 5 m (197 inch) of cable[2]				**3**						
Wetted seals										
FKM					**0**					
FFKM [for process temperatures above -20 °C (-4 °F)]					**1**					
Probe material										
316L stainless steel with PPS probe body							**0**			
316L stainless steel with PVDF probe body							**1**			
Approvals										
Non-Sparking: CE, RCM, ATEX II 3 G Ex nA II T6 ... T4, ATEX II 2 D IP6X T100 °C								**B**		
Dust Ignition Proof: CE, RCM, ATEX II ½ D T100 °C								**C**		
Intrinsically Safe:[1] CE, RCM, ATEX II 1 G EEx ia IIC T6 ... T4, ATEX II ½ D IP6X T100 °C								**D**		
Flameproof Enclosure with IS Probe: CE, RCM, ATEX II ½ G EEx d[ia] IIC T6 ... T4, ATEX II ½ D T100 °C								**E**		

	Article No.									
Pointek CLS200 RF Capacitance point level switch, digital, sanitary rod design.	**7ML5642-**									
Detects level and interface in liquids, solids, slurries, and foam. Adjustable, 5.5 m (18.04 ft), insertion, adaptable sensitivity, with the ability to tune out build-up on probe. With display and digital communications.	■	■	■	■	■	-	■	■	■	**0**
Non-incendive: CSA/FM Class I, Div. 2, Groups A, B, C, D CSA/FM Class II, Div. 2, Groups F, G CSA/FM Class III T4 or T6								**F**		
Dust Ignition Proof with IS Probe: CSA/FM Class II, Div. 1, Groups E, F, G CSA/FM Class III T4								**G**		
Intrinsically Safe:[1] CSA/FM Class I, Div. 1, Groups A, B, C, D CSA/FM Class II, Div. 1, Groups E, F, G CSA/FM Class III T4								**H**		
Explosion Proof with IS Probe: CSA/FM Class I, Div. 1, Groups A, B, C, D CSA/FM Class II, Div. 1, Groups E, F, G CSA/FM Class III T4								**J**		
General Purpose (CSA, FM)								**K**		
General Purpose (CE, RCM)								**L**		
Enclosure and lid										
Aluminum epoxy coated										
2 x ½" NPT via adapter - cable inlet, IP65									**A**	
2 x M20 x 1.5 cable inlet, IP65									**B**	
2 x ½" NPT via adapter - cable inlet, IP68									**C**	
2 x M20 x 1.5 cable inlet, IP68									**D**	

[1] Barrier or Intrinsically Safe power supply required for Intrinsically Safe protection.

[2] Available with Approvals options F, G, H, J, and K.

Further designs	Order code
Please add "**-Z**" to Article No. and specify Order code(s).	
Total insertion length: enter the total insertion length in plain text description	**Y01**
Stainless steel tag [70 x 13 mm (2.75 x 0.5 inch)]: Measuring-point number/identification (max. 27 characters) specify in plain text	**Y15**
Manufacturer's test certificate: M to DIN 55350, Part 18 and ISO 9000	**C11**
Material inspection Certificate Type 3.1 per EN 10204	**C12**
INMETRO[1]	**E34**
Operating Instructions	
All literature is available to download for free, in a range of languages, at	
http://www.siemens.com/processinstrumentation/documentation	
Accessories	See page 4/41

[1] Available only with Approvals options C and E.

© Siemens 2020

Selection and ordering data

	Article No.									
Pointek CLS200 RF Capacitance point level switch, digital, sliding coupling design. ↗	**7ML5643-**									
Detects level and interface in liquids, solids, slurries, and, foam. Adjustable, 5.5 m (18.04 ft), insertion, adaptable sensitivity, with the ability to tune out build-up on probe. With display and digital communications.	■	■	■	■	■	-	■	■	■	**0**
↗ Click on the Article No. for the online configuration in the PIA Life Cycle Portal.										
Process connection										
Threaded, 316L stainless steel										
¾" NPT [(Taper), ANSI/ASME B1.20.1]	**0**	**A**								
1" NPT [(Taper), ANSI/ASME B1.20.1]	**0**	**B**								
1¼" NPT [(Taper), ANSI/ASME B1.20.1]	**0**	**C**								
1½" NPT [(Taper), ANSI/ASME B1.20.1]	**0**	**D**								
R ¾" [(BSPT), EN 10226/PT (JIS-T), JIS B 0203]	**1**	**A**								
R 1" [(BSPT), EN 10226/PT (JIS-T), JIS B 0203]	**1**	**B**								
R 1½" [(BSPT), EN 10226/PT (JIS-T), JIS B 0203]	**1**	**D**								
G ¾" [(BSPP), EN ISO 228-1/PF (JIS-P), JIS B 0202]	**3**	**A**								
G 1" [(BSPP), EN ISO 228-1/PF (JIS-P), JIS B 0202]	**3**	**B**								
G 1½" [(BSPP), EN ISO 228-1/PF (JIS-P), JIS B 0202]	**3**	**D**								
Probe length										
(length from flange face) (threaded lengths include process thread)										
Note: No Y01 needed in Order code for standard lengths										
Extended rod, 350 mm (13.78 inch)			**C**							
Extended rod, 500 mm (19.69 inch)			**D**							
Extended rod, 750 mm (29.53 inch)			**E**							
Extended rod, 1 000 mm (39.37 inch)			**F**							
Extended rod, 1 250 mm (49.21 inch)			**G**							
Extended rod, 1 350 mm (53.15 inch)			**H**							
Extended rod, 1 500 mm (59.06 inch)			**J**							
Extended rod, 1 750 mm (68.90 inch)			**K**							
Extended rod, 2 000 mm (78.74 inch)			**L**							
Add Order code Y01 and plain text: "Insertion length ... mm"										
Extended rod, 350 ... 1 000 mm (13.82 ... 39.37 inch)			**M**							
Extended rod, 1 001 ... 2 000 mm (39.41 ... 78.74 inch)			**N**							
Extended rod, 2 001 ... 3 000 mm (78.78 ... 118.11 inch)			**P**							
Extended rod, 3 001 ... 4 000 mm (118.15 ... 157.48 inch)			**Q**							
Extended rod, 4 001 ... 5 000 mm (157.52 ... 196.85 inch)			**R**							
Extended rod, 5 001 ... 5 500 mm (196.89 ... 216.53 inch)			**S**							
Thermal isolator										
Without thermal isolator				**0**						
With thermal isolator [for process connection temperatures over 85 °C (185 °F)]				**1**						
Remote mount electronics and mounting bracket										
With 2 m (79 inch) of cable[2]				**2**						
With 5 m (197 inch) of cable[2]				**3**						
Wetted seals										
FKM and PTFE					**0**					
FFKM and PTFE [for process temperatures above -20 °C (-4 °F)]					**1**					
Probe material										
316L stainless steel with PPS probe body							**0**			
316L stainless steel with PVDF probe body							**1**			
Approvals										
Non-Sparking: CE, RCM, ATEX II 3 G Ex nA II T6 ... T4, ATEX II 2 D IP6X T100 °C								**B**		
Dust Ignition Proof: CE, RCM, ATEX II 1/2 D T100 °C								**C**		
Intrinsically Safe:[1] CE, RCM, ATEX II 1 G EEx ia IIC T6 ... T4, ATEX II 1/2 D IP6X T100 °C								**D**		

	Article No.									
Pointek CLS200 RF Capacitance point level switch, digital, sliding coupling design.	**7ML5643-**									
Detects level and interface in liquids, solids, slurries, and, foam. Adjustable, 5.5 m (18.04 ft), insertion, adaptable sensitivity, with the ability to tune out build-up on probe. With display and digital communications.	■	■	■	■	■	-	■	■	■	**0**
Flameproof Enclosure with IS Probe: CE, RCM, ATEX II 1/2 G EEx d[ia] IIC T6 ... T4, ATEX II 1/2 D T100 °C								**E**		
Non-incendive: CSA/FM Class I, Div. 2, Groups A, B, C, D CSA/FM Class II, Div. 2, Groups F, G CSA/FM Class III T4 or T6								**F**		
Dust Ignition Proof with IS Probe: CSA/FM Class II, Div. 1, Groups E, F, G CSA/FM Class III T4								**G**		
Intrinsically Safe:[1] CSA/FM Class I, Div. 1, Groups A, B, C, D CSA/FM Class II, Div. 1, Groups E, F, G CSA/FM Class III T4								**H**		
Explosion Proof with IS Probe: CSA/FM Class I, Div. 1, Groups A, B, C, D CSA/FM Class II, Div. 1, Groups E, F, G CSA/FM Class III T4								**J**		
General Purpose (CSA, FM)								**K**		
General Purpose (CE, RCM)								**L**		
Enclosure and lid										
Aluminum epoxy coated										
2 x ½" NPT via adapter - cable inlet, IP65									**A**	
2 x M20 x 1.5 cable inlet, IP65									**B**	
2 x ½" NPT via adapter - cable inlet, IP68									**C**	
2 x M20 x 1.5 cable inlet, IP68									**D**	

[1] Barrier or Intrinsically Safe power supply required for Intrinsically Safe protection.

[2] Available with Approvals options F, G, H, J, and K.

Further designs	Order code
Please add "**-Z**" to Article No. and specify Order code(s).	
Total insertion length: enter the total insertion length in plain text description	**Y01**
Stainless steel tag [70 x 13 mm (2.75 x 0.5 inch)]: Measuring-point number/identification (max. 27 characters) specify in plain text	**Y15**
Manufacturer's test certificate: M to DIN 55350, Part 18 and ISO 9000	**C11**
Material inspection Certificate Type 3.1 per EN 10204	**C12**
INMETRO[1]	**E34**
Operating Instructions	
All literature is available to download for free, in a range of languages, at	

http://www.siemens.com/processinstrumentation/documentation

Accessories	See page 4/41

[1] Available only with Approvals options C and E.

© Siemens 2020

Selection and ordering data

	Article No.
Accessories	
SensGuard, ¾" NPT (PPS). Only available for CLS200 with ¾" NPT thread.	**7ML1830-1DL**
SensGuard, R 1" (BSPT) (PPS). Only available for CLS200 with ¾" NPT thread.	**7ML1830-1DM**
One metallic cable gland M20 x 1.5, -40 ... +80 °C (-40 ... +176 °F), Dust Ignition Proof, with integrated shield connection (available for PROFIBUS PA)	**7ML1930-1AQ**
General Purpose	
½" NPT General Purpose Cable Entry IP68/IP69K NEMA 6, -40 ... +80 °C (-40 ... +176 °F), Dust Ignition Proof, cable size 6 ... 12 mm (0.236 ... 0.472 inch)	**7ML1830-1JA**
M20 x 1.5 General Purpose Cable Entry IP68/IP69K NEMA 6, -40 ... +80 °C (-40 ... +176 °F), Dust Ignition Proof, cable size 7 ... 12 mm (0.275 ... 0.472 inch)	**7ML1830-1JC**
Hazardous Locations	
1/2" NPT EMC rated Cable Gland: Dust Ignition Proof, Flameproof Exd, and Increased Safety ATEX II 2 GD ExtD A21 (Zone 1, Zone 2, Zone 21, Zone 22, and in Gas Groups IIA, IIB and IIC) 60 ... +80 °C IP66, IP67, IP68, NEMA4X, cable sizes 5.5 ... 12 mm (0.216 ... 0.472 inch)	**7ML1830-1JB**
M20 EMC rated Cable Gland: Dust Ignition Proof, Flameproof Exd, and Increased Safety ATEX II 2 GD ExtD A21 (Zone 1, Zone 2, Zone 21, Zone 22 and in Gas Groups IIA, IIB and IIC) 60 ... +80 °C IP66, IP67, IP68, NEMA4X, cable sizes 5.5 ... 12 mm (0.216 ... 0.472 inch)	**7ML1830-1JD**
Blind threaded flanges are available. Customers interested in a custom designed device should consult a local sales person. For more information, please visit http://www.automation.siemens.com/aspa_app.	
Pointek Specials	See page **4/70**

Options

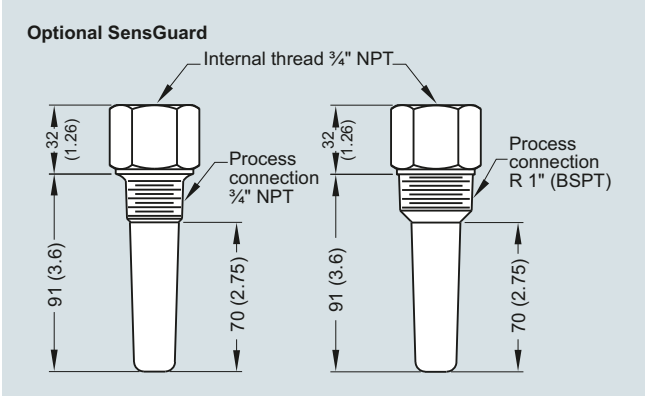

Optional SensGuard, dimensions in mm (inch)

4

© Siemens 2020

Characteristic curves

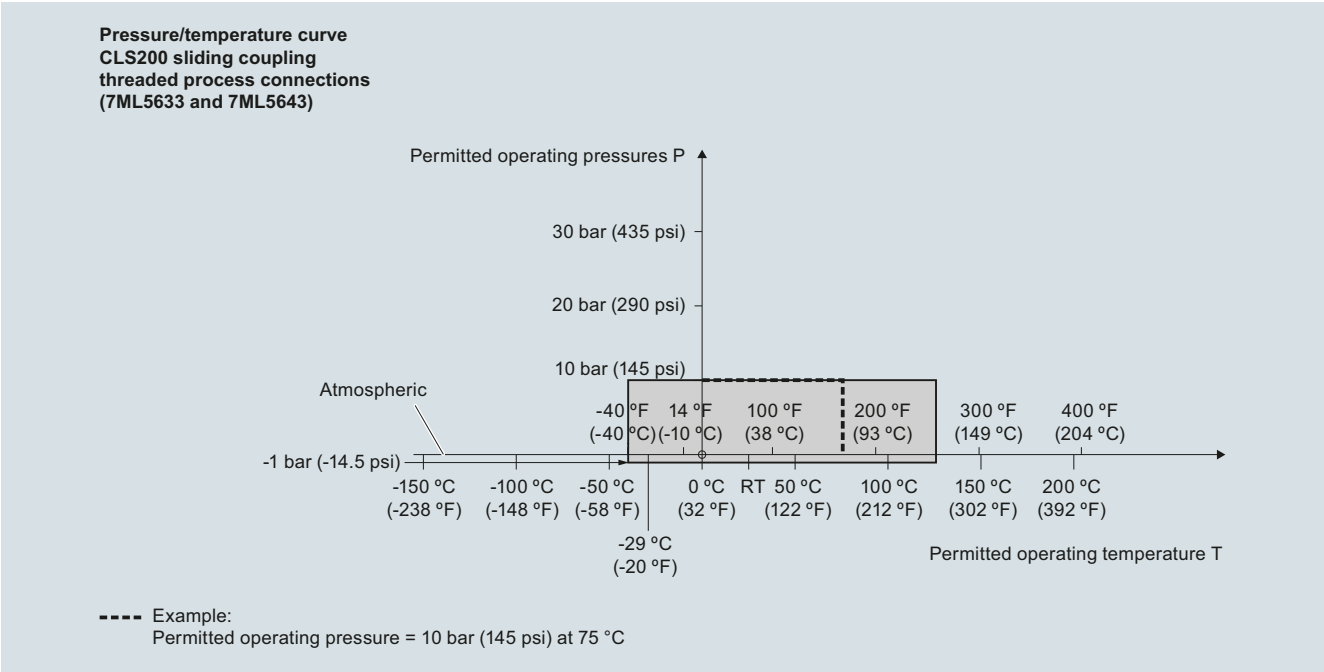

Pointek CLS200 process pressure/temperature derating curves (7ML5633 and 7ML5643)

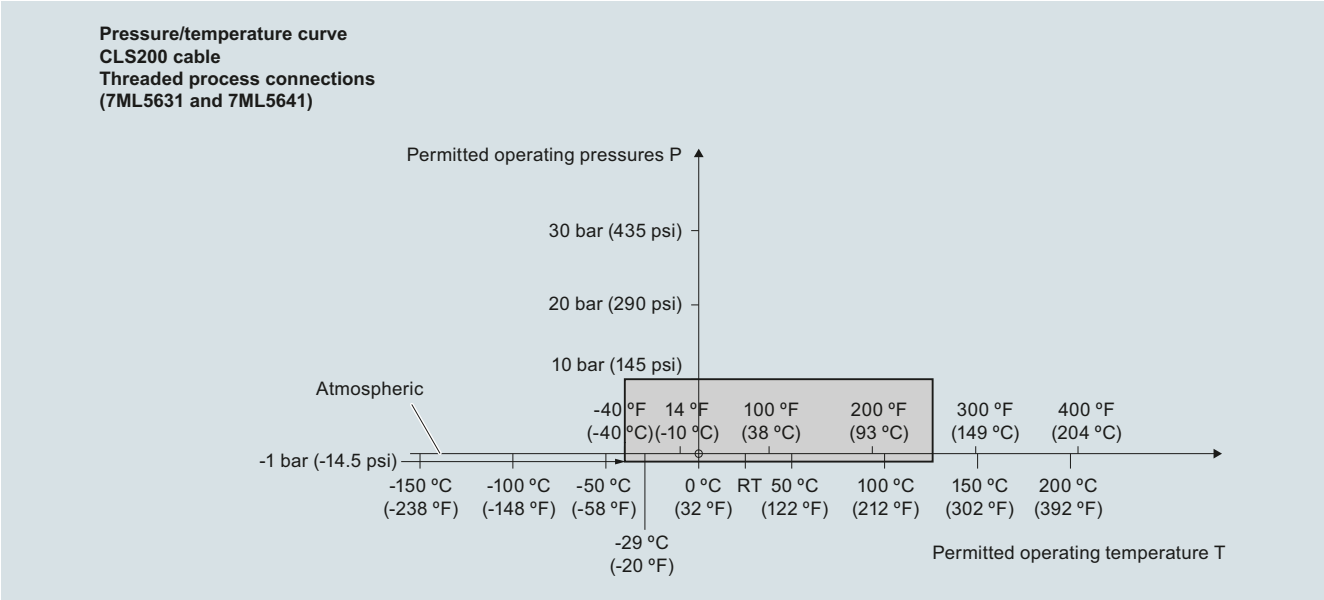

Pointek CLS200 process pressure/temperature derating curves (7ML5631 and 7ML5641)

© Siemens 2020

Characteristic curves (continued)

Pressure/temperature curve
CLS200 compact and extended rod
Threaded process connections
(7ML5630 and 7ML5640)

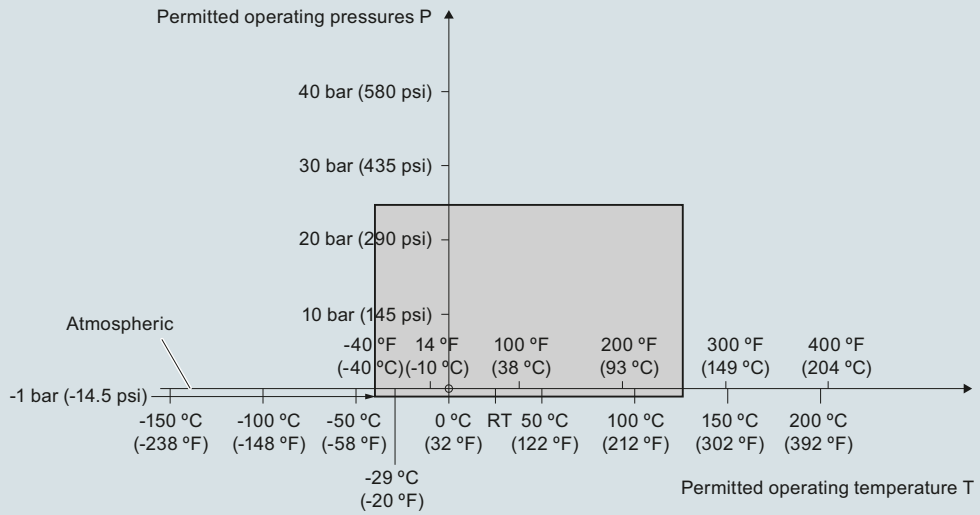

Pointek CLS200 process pressure/temperature derating curves (7ML5630 or 7ML5640)

Pressure/temperature curve
CLS200 compact and extended sanitary type
Sanitary process connections
(7ML5632 and 7ML5642)

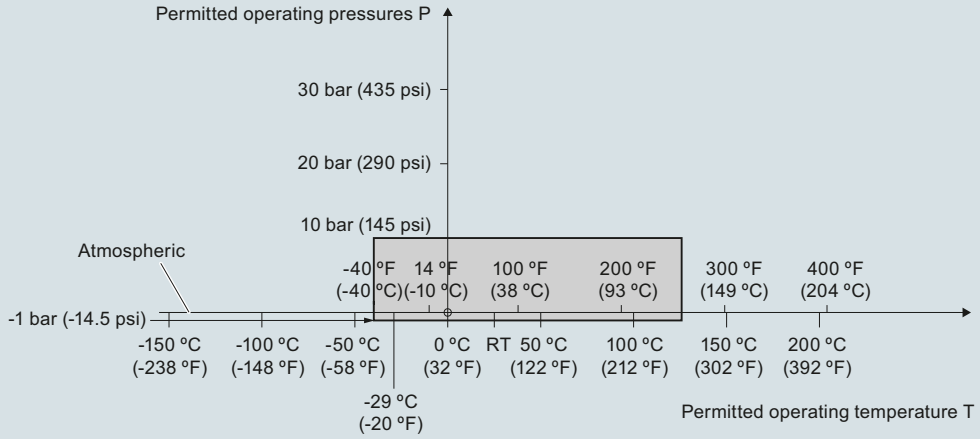

Pointek CLS200 process pressure/temperature derating curves (7ML5632 and 7ML5642)

© Siemens 2020

Characteristic curves (continued)

Pressure/temperature curve
CLS200, cable
ASME flanged process connections
(7ML5631 and 7ML5641)

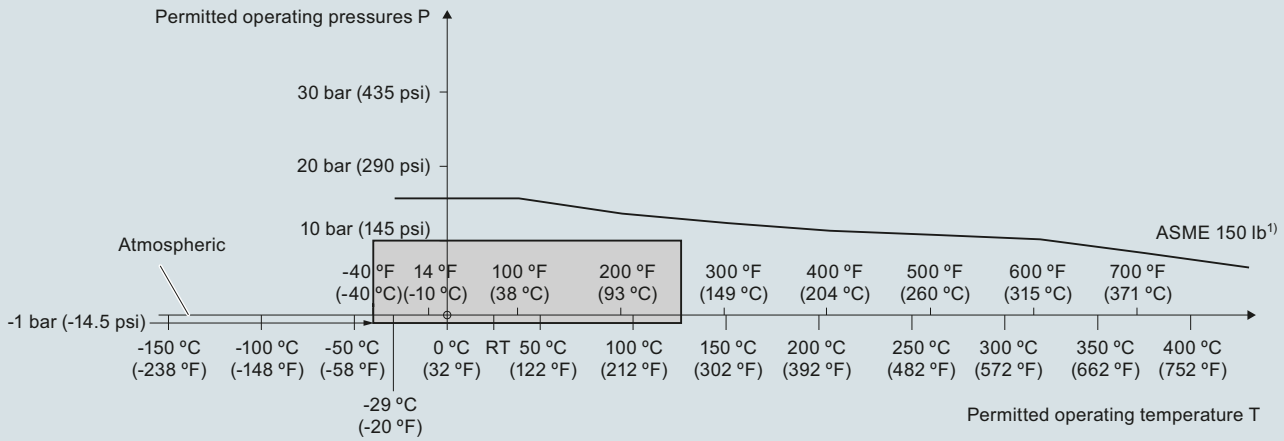

1) The curve denotes the minimum allowable flange class for the shaded area below.

Pointek CLS200 process pressure/temperature derating curves (7ML5631 and 7ML5641)

Pressure/temperature curve
CLS200 compact and extended rod
ASME flanged process connections
(7ML5630 and 7ML5640)

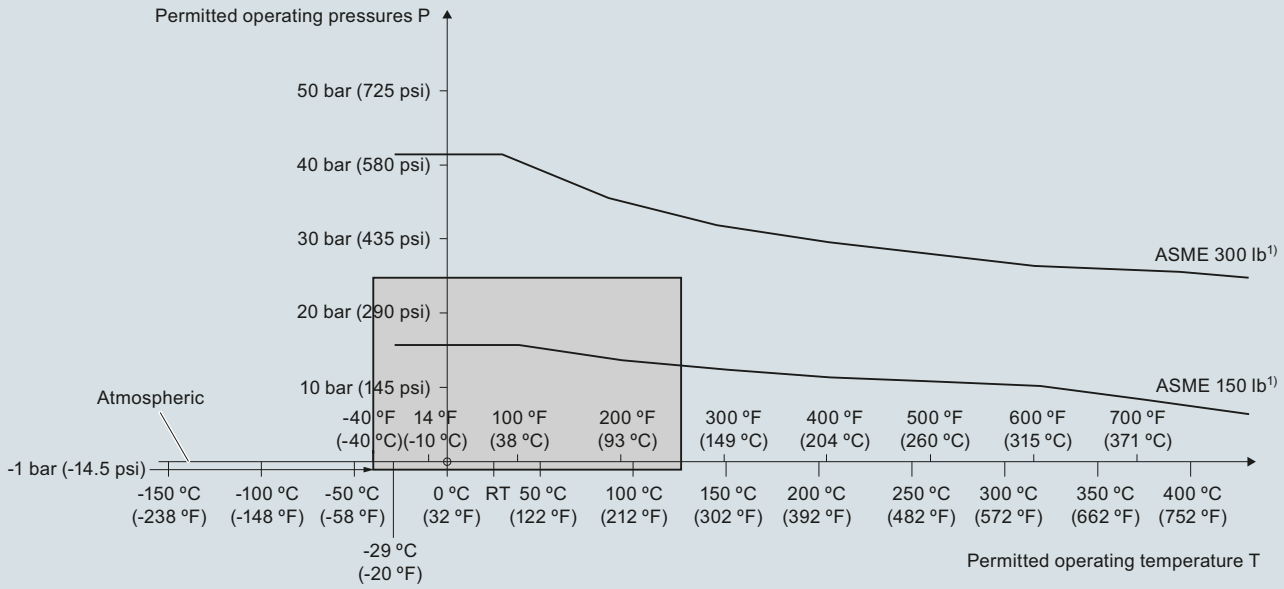

1) The curve denotes the minimum allowable flange class for the shaded area below.

Pointek CLS200 process pressure/temperature derating curves (7ML5630 and 7ML5640)

© Siemens 2020

Characteristic curves (continued)

Pressure/temperature curve
CLS200 cable
EN flanged process connections
(7ML5631 and 7ML5641)

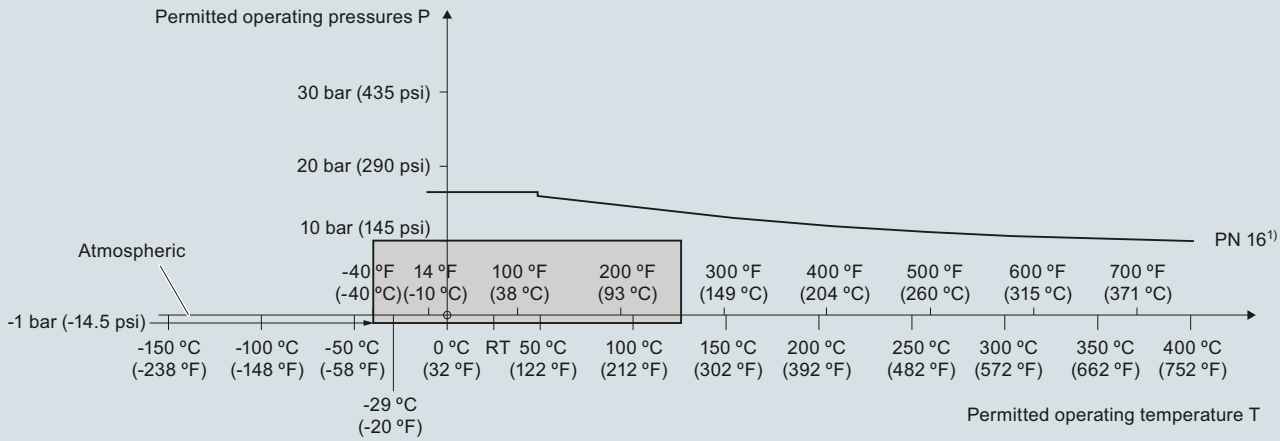

[1)] The curve denotes the minimum allowable flange class for the shaded area below.

Pointek CLS200 process pressure/temperature derating curves (7ML5631 and 7ML5641)

Pressure/Temperature Curve
CLS200 Compact and Extended Rod
EN Flanged Process Connections
(7ML5630 and 7ML5640)

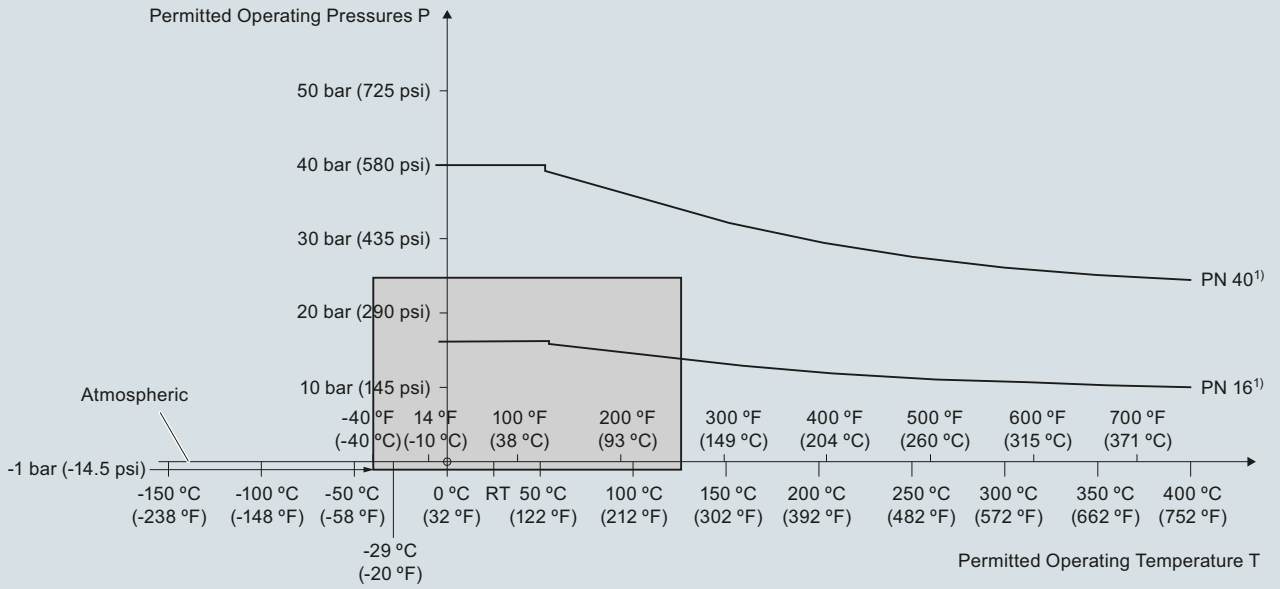

[1)] The curve denotes the minimum allowable flange class for the shaded area below.

Pointek CLS200 process pressure/temperature derating curves (7ML5630 and 7ML5640)

© Siemens 2020

Dimensional drawings

Compact version
Threaded
(7ML5630 and 7ML5640)

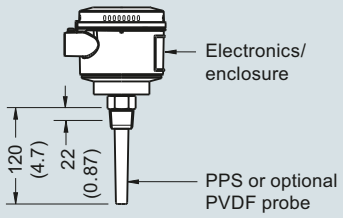

Extended rod version
Threaded
(7ML5630 and 7ML5640)

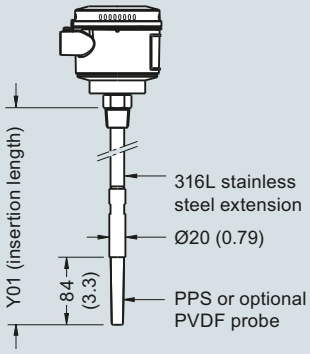

Min. insertion length = 200 (7.87)
Max. insertion length = 5 500 (216)

Extended cable version
Threaded
(7ML5631 and 7ML5641)

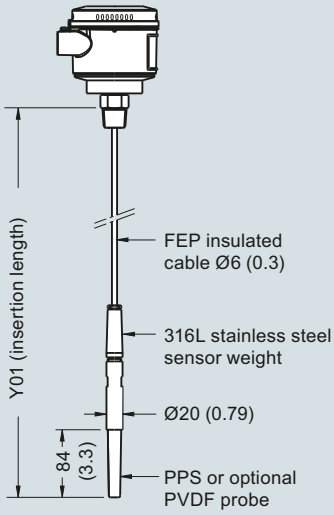

Min. insertion length = 500 (19.69)
Max. insertion length = 30 000 (1 181)
Applicable for liquids and solids applications. Cable can be shortened on site.

Sanitary compact version
Sanitary fitting
(7ML5632 and 7ML5642)

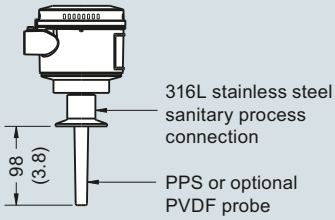

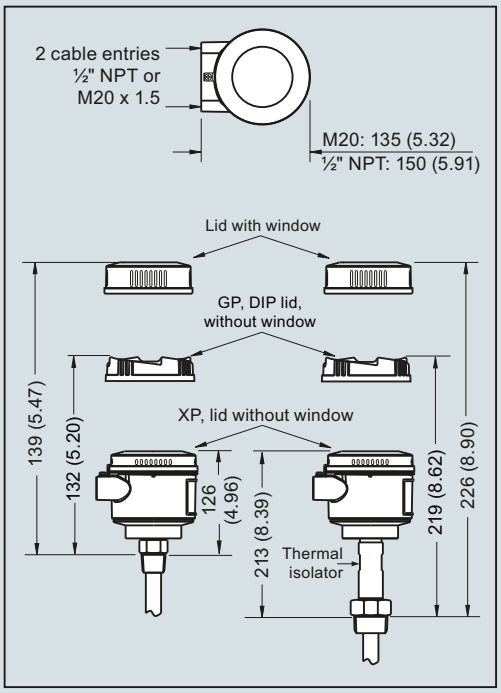

Sanitary extended version
Sanitary fitting
(7ML5632 and 7ML5642)

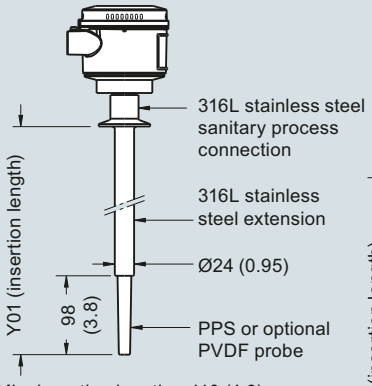

Min. insertion length = 110 (4.3)
Max. insertion length = 5 500 (216)

Sliding coupling version
Threaded
(7ML5633 and 7ML5643)

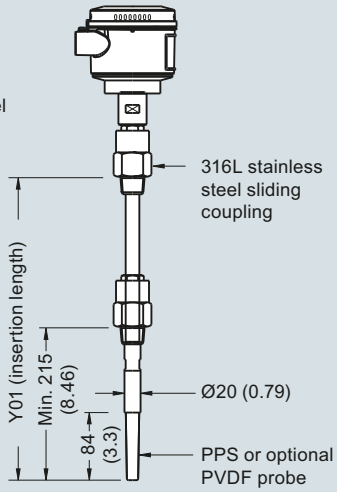

Min. insertion length = 350 (13.82)
Max. insertion length = 5 500 (216)

Pointek CLS200 threaded/sanitary process connections, dimensions in mm (inch)

© Siemens 2020

Dimensional drawings (continued)

Compact version
Welded Flange (7ML5630 and 7ML5640)
Welded Flange, PFA coated
(7ML5634 and 7ML5644)

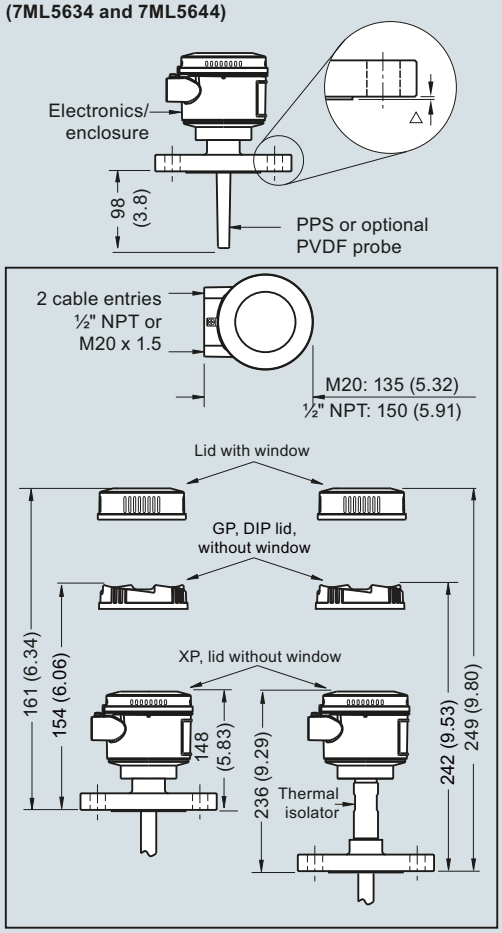

Extended rod version
Welded Flange (7ML5630 and 7ML5640)
Welded Flange, PFA coated
(7ML5634 and 7ML5644)

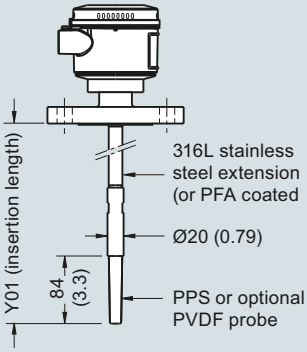

Min. insertion length = 200 (7.87)
Max. insertion length = 5 500 (216)

Extended cable version
Welded Flange
(7ML5631 and 7ML5641)

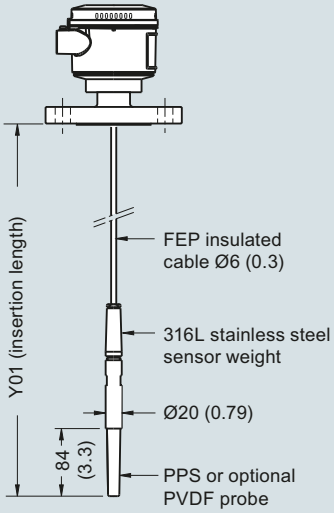

Min. insertion length = 500 (19.69)
Max. insertion length = 30 000 (1 181)
Applicable for liquids and solids applications. Cable can be shortened on site.

Flange Facing (raised face)	
Flange Class	**Facing thickness**
△ ASME 150/300	2 (0.08)
△ ASME 600/900	7 (0.28)
△ PN16/40	2 (0.08)

Insertion length does not include any raised face/gasket face dimension (see Flange Facing Table above)

Pointek CLS200 flanged process connections, dimensions in mm (inch)

© Siemens 2020

Circuit diagrams

Wiring: Pointek CLS200 standard

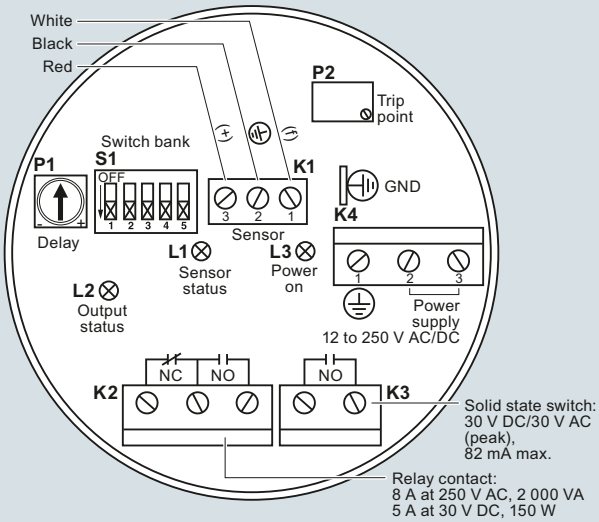

Notes:
- Identification label is on underside of lid. Switch and potentiometer settings are for illustration purposes only (refer to operation/setup in manual).
- All field wiring must have insulation suitable for at least 250 V.
- Relay contact terminals are for use with equipment having no accessible live parts and wiring having insulation suitable for at least 250 V.
- Maximum working voltage between adjacent relay contacts shall be 250 V.
- Refer to the Instruction Manual or contact Siemens representative for detailed wiring information.

Wiring: Pointek CLS200 Digital

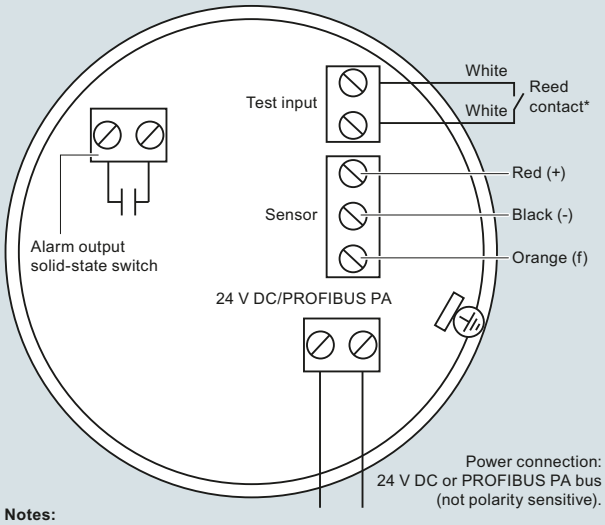

Notes:
Refer to the instruction manual or contact a Siemens representative for detailed wiring information.

***Magnet activated sensor Test**
A magnet can be used to test the sensor without opening the lid of the Pointek CLS200 Digital version. Bring the magnet close to the test area indicated on the enclosure. The sensor test starts and finishes automatically after 10 seconds.

Pointek CLS200 connections

© Siemens 2020

Overview

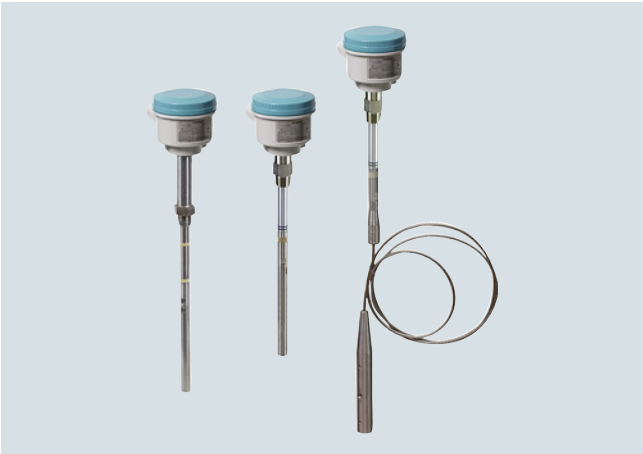

Pointek CLS300 (standard version) is an inverse frequency shift capacitance level and material detection switch with optional rod/cable choices and configurable output. CLS300 is ideal for detecting liquids, solids, slurries, foam, and interfaces in demanding conditions where high pressure and temperatures are present and has the ability to tune out buildup on the probe.

Benefits

- Active-Shield technology so measurement is unaffected by material buildup or nozzle interference in active shield section
- Performs in extremely abrasive conditions because of solid rod construction
- Three LED indicators for adjustment control, output status, and power
- High-temperature version up to 400 °C (752 °F)

Application

Pointek CLS300 standard version has three LED indicators with basic relay and solid-state switch alarms.

The robust design of CLS300 makes it specifically applicable for heavy solids applications where abrasive materials occur as in the mining industry. The fully potted electronics are unaffected by condensation, dust or vibration.

Wetted parts are made of stainless steel with a PFA shield for high chemical resistance, and of ceramic and stainless steel for high temperature version. Materials with low or high dielectric constants can be accurately detected. The unique Active Shield suppresses interference from material buildup or long installation nozzles.

The unique modular design of the Pointek CLS300 provides a wide range of configurations, process connections, extensions and approvals to meet the temperature and pressure requirements of specific applications. The modular design makes ordering easier and reduces stocking requirements. A wide range of probe configurations are available, including rod and cable versions.

- Key Applications: liquids, slurries, bulk solids, relatively high pressure and temperature, hazardous areas, milling and mining applications

Configuration

Installation

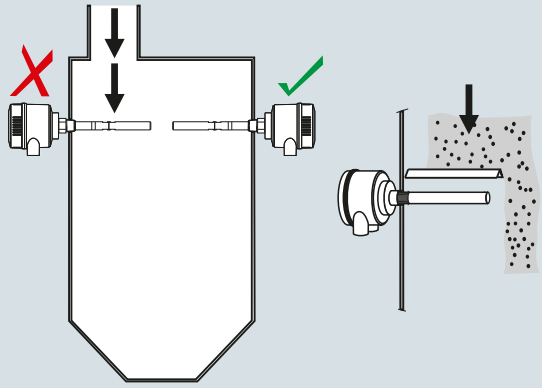

Keep unit out of path of falling material, or protect probe from falling material.

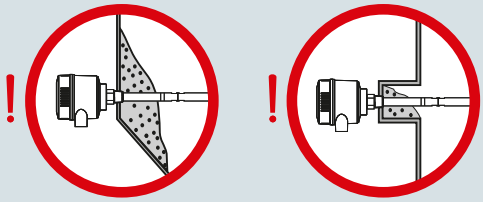

Build up of material in active shield area does not affect switch operation.

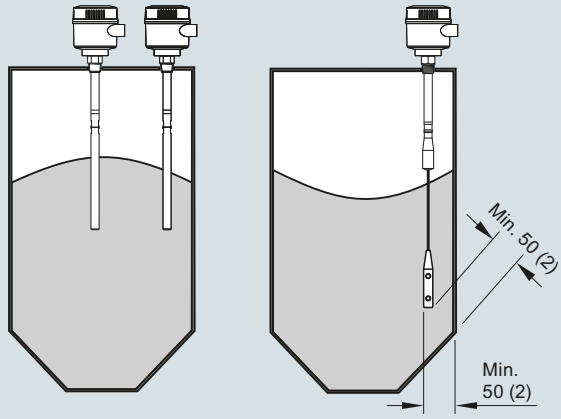

Install probe at least 50 (2) from tank wall.
Note angle of repose and adjust accordingly.

Pointek CLS300 installation, dimensions in mm (inch)

© Siemens 2020

Technical specifications

Mode of operation	
Measuring principle	Inverse frequency shift capacitive level detection
Input	
Measured variable	Change in picoFarad (pF)
Output	
Output signal	
• Relay output	1 SPDT Form C relay
- Max. contact voltage	• 30 V DC • 250 V AC
- Max. contact current	• 5 A (DC) • 8 A (AC)
- Max. switching capacity	• 150 W (DC) • 2 000 VA (AC)
- Time delay (ON and/or OFF)	1 ... 60 s
• Solid-state output	
- Output	Galvanically isolated
- Protection	Against reversed polarity (bipolar)
- Max. switching voltage	• 30 V (DC) • 30 V peak (AC)
- Max. load current	82 mA
- Voltage drop	< 1 V, typical at 50 mA
- Time delay (pre or post switching)	1 ... 60 s
Accuracy	
Resolution	
• Min. sensitivity (pF)	1 % change in actual capacitance
• Max. temperature error	0.2 % of actual capacitance value
Rated operating conditions[1]	
Installation conditions	
• Location	Indoor/outdoor
Ambient conditions	
• Ambient temperature	-40 ... +85 °C (-40 ... +185 °F)[2]
• Storage temperature	-40 ... +85 °C (-40 ... +185 °F)
Medium conditions	Liquids, bulk solids, slurries and interfaces, and applications with viscous materials
• Relative dielectric constant ε_r	Min. 1.5
• Process temperature	
- Rod/Cable version	-40 ... +200 °C (-40 ... +392 °F)[2]
- High-temperature version	-40 ... +400 °C (-40 ... +752 °F)
• Process pressure[3]	-1 ... +35 bar g (-14.6 ... +511 psi g)

Design	
Material (enclosure)	Powder-coated aluminum with gasket
Degree of Protection	Standard: Type 4/NEMA 4/IP65 Optional: Type 4/NEMA 4/IP68
Cable inlet	2 x M20 x 1.5 thread (option: 2 x ½" NPT conduit entry including 1 plugged entry)
Controls and displays	
Displays	3 LEDs, for probe status, output status and power supply
Potentiometers	2 potentiometers for time delay and sensitivity
Switches	5 DIP switches for delay on/off, fail-safe high/low, time delay test/adjust, high/low sensitivity, test delay settings
Power supply	
Supply	12 ... 250 V AC/DC, 0 ... 60 Hz, galvanically isolated, 2 W
Certificates and approvals	
General Purpose	CSA, FM, CE, RCM
Flameproof Enclosure with IS Probe	ATEX II ½ G EEx d[ia] IIC T6 ... T1 ATEX II ½ D T100 °C
Dust Ignition Proof with IS Probe	ATEX II ½ D T100 °C CSA/FM Class II, Div. 1, Groups E, F, G CSA/FM Class III T4
Explosion Proof Enclosure with IS Probe	CSA/FM Class I, Div. 1, Groups A, B, C, D CSA/FM Class II, Div. 1, Groups E, F, G CSA/FM Class III T4
Marine	Lloyds Register of Shipping, Categories ENV1, ENV2, and ENV5
Overfill Protection	WHG (Germany) VLAREM II (Belgium)
Others	Pattern Approval (China)

1) When operation is in areas classified as hazardous, observe restrictions according to relevant certificate. See also Pressure/Temperature curves starting on page 5/57.

2) Thermal isolator is used if process connection temperature exceeds 85 °C (185 °F).

3) Pressure rating of process seal is temperature dependent. See Pressure/Temperature curves starting on page 5/57.

Design: Probe

	Rod version	High Temperature version	Cable version
Length	Min. 250 mm (9.8 inch), max. 1 000 mm (40 inch)	Min. 250 mm (9.8 inch), max. 1 000 mm (40 inch)	Min. 1 000 mm (40 inch), max. 25 000 mm (984 inch)
Sensor wetted parts	PFA (no insulation on active probe), 316L stainless steel, PEEK isolators	Ceramic (ZrO_2[1]) isolators (no insulation on active probe), 316L stainless steel	316 stainless steel, o ptional PFA, PEEK isolators
O-ring seal material	FKM (optional FFKM)[2]	Graphite[2]	FKM (optional FFKM)[2]
Thermal isolator	Optional	Standard	Optional
Extension	User selectable length	User selectable length	User selectable cable length

1) Zirconium Oxide

2) For caustic materials, consult a local sales person for alternative O-rings.
For more information, please visit http://www.automation.siemens.com/aspa_app.

© Siemens 2020

Selection and ordering data

	Article No.
Pointek CLS300 RF Capacitance point level switch, rod design. ↗	**7ML5650-** ■ ■ ■ ■ ■ - ■ ■ ■ ■
Detects level and interface in aggressive liquids, solids, slurries, and foam. Adjustable, 1 m (3.28 ft), insertion, adaptable sensitivity, with active shield to tune out build-up on probe.	
↗ Click on the Article No. for the online configuration in the PIA Life Cycle Portal.	
Process connection	
Threaded, 316L stainless steel	
¾" NPT [(Taper), ANSI/ASME B1.20.1]	0 A
1" NPT [(Taper), ANSI/ASME B1.20.1]	0 B
1¼" NPT [(Taper), ANSI/ASME B1.20.1]	0 C
1½" NPT [(Taper), ANSI/ASME B1.20.1]	0 D
R ¾" [(BSPT), EN 10226/PT (JIS-T), JIS B 0203]	1 A
R 1" [(BSPT), EN 10226/PT (JIS-T), JIS B 0203]	1 B
R 1½" [(BSPT), EN 10226/PT (JIS-T), JIS B 0203]	1 D
G ¾" [(BSPP), EN ISO 228-1/PF (JIS-P), JIS B 0202]	3 A
G 1" [(BSPP), EN ISO 228-1/PF (JIS-P), JIS B 0202]	3 B
G 1½" [(BSPP), EN ISO 228-1/PF (JIS-P), JIS B 0202]	3 D
Welded flange, 316L stainless steel, raised face	
1" ASME, 150 lb	5 A
1" ASME, 300 lb	5 B
1" ASME, 600 lb	5 C
1½" ASME, 150 lb	5 D
1½" ASME, 300 lb	5 E
1½" ASME, 600 lb	5 F
2" ASME, 150 lb	5 G
2" ASME, 300 lb	5 H
2" ASME, 600 lb	5 J
3" ASME, 150 lb	5 K
3" ASME, 300 lb	5 L
3" ASME, 600 lb	5 M
4" ASME, 150 lb	5 N
4" ASME, 300 lb	5 P
4" ASME, 600 lb	5 Q
Welded flange, 316L stainless steel, Type A flat faced	
DN 25, PN 16	6 A
DN 25, PN 40	6 B
DN 40, PN 16	6 C
DN 40, PN 40	6 D
DN 50, PN 16	6 E
DN 50, PN 40	6 F
DN 80, PN 16	6 G
DN 80, PN 40	6 H
DN 100, PN 16	6 J
DN 100, PN 40	6 K
(Note: flange bolting patterns and facings dimensionally correspond to the applicable ASME B16.5 or EN 1092-1 standard.)	
Probe length	
(length from flange face) (threaded lengths include process thread)	
Note: No Y01 needed in Order code for standard lengths	
Standard version, rod 350 mm (13.78 inch)	A
Extended rod, length 500 mm (19.69 inch)	B
Extended rod, length 750 mm (29.53 inch)	C
Extended rod, length 1 000 mm (39.37 inch)	D
Add Order code Y01 and plain text: "Insertion length ... mm"	
Extended rod, factory adjusted length 250 ... 499 mm (9.8 ... 19.65 inch)	E
Extended rod, factory adjusted length 500 ... 749 mm (19.69 ... 29.49 inch)	F
Extended rod, factory adjusted length 750 ... 999 mm (29.53 ... 39.3 inch)	G

	Article No.
Pointek CLS300 RF Capacitance point level switch, rod design.	**7ML5650-** ■ ■ ■ ■ ■ - ■ ■ ■ ■
Detects level and interface in aggressive liquids, solids, slurries, and foam. Adjustable, 1 m (3.28 ft), insertion, adaptable sensitivity, with active shield to tune out build-up on probe.	
Thermal isolator	
Without thermal isolator	0
With thermal isolator [for process connection temperatures over 85 °C (185 °F)]	1
Wetted seals	
FKM	0
FFKM [for process temperatures above -20 °C (-4 °F)]	1
Probe material	
316L stainless steel with PFA lining and PEEK isolators	0
Approvals	
Dust Ignition Proof with IS Probe: CE, RCM, ATEX II ½ D T100 °C	C
Flameproof Enclosure with IS Probe: CE, RCM, ATEX II ½ G EEx d[ia] IIC T6 ... T1, ATEX II ½ D T100 °C	D
Flameproof Enclosure with IS Probe, with WHG approval: CE, RCM, ATEX II ½ G EEx d[ia] IIC T6 ... T1, ATEX II ½ D T100 °C	E
Dust Ignition Proof with IS Probe: CSA/FM Class II, Div. 1, Groups E, F, G, CSA/FM Class III T4	F
Explosion Proof Enclosure with IS Probe: CSA/FM Class I, Div. 1, Groups A, B, C, D, CSA/FM Class II, Div. 1, Groups E, F, G, CSA/FM Class III T4	G
General Purpose (CSA, FM)	H
General Purpose (CE, RCM)	J
General Purpose with WHG approval (CSA, FM, CE, RCM)	K
Enclosure and lid	
Aluminum epoxy coated	
2 x ½" NPT via adapter - cable inlet, IP65	A
2 x M20 x 1.5 cable inlet, IP65	B
2 x ½" NPT via adapter - cable inlet, IP68	C
2 x M20 x 1.5 cable inlet, IP68	D
Active shield length	
Standard length - (125 mm threaded, 105 mm flanged)	0
Extended shield - (250 mm threaded, 230 mm flanged)[1]	1
Extended shield - (400 mm threaded, 380 mm flanged)[2]	2

[1] Available with Probe version options B ... D, F, G only [≥ 500 mm (19.69 inch)].

[2] Available with Probe version options C, D, and G only [≥ 750 mm (29.53 inch)].

© Siemens 2020

Selection and ordering data

	Order code
Further designs	
Please add "**-Z**" to Article No. and specify Order code(s).	
Total insertion length: enter the total insertion length in plain text description	**Y01**
Stainless steel tag [70 x 13 mm (2.75 x 0.5 inch)]: Measuring-point number/identification (max. 27 characters) specify in plain text	**Y15**
Manufacturer's test certificate: M to DIN 55350, Part 18 and to ISO 9000	**C11**
Material Inspection Certificate Type 3.1 per EN 10204	**C12**
INMETRO[1)]	**E34**
Operating Instructions	
All literature is available to download for free, in a range of languages, at	
http://www.siemens.com/processinstrumentation/documentation.	
Accessories	See page **4/69**

1) Available only with Approvals options C, D, E.

	Article No.								
Pointek CLS300 RF Capacitance point level switch, cable design. ↗	**7ML5651-**	■	■	■	■	-	■	■	■
Detects level and interface in aggressive liquids, solids, slurries, and foam. Cable extension options to 25 m (82.02 ft), adaptable sensitivity, with active shield to tune out build-up on probe.									
↗ Click on the Article No. for the online configuration in the PIA Life Cycle Portal.									
Process connection									
Threaded, 316L stainless steel									
1¼" NPT [(Taper), ANSI/ASME B1.20.1]	**0**	**C**							
1½" NPT [(Taper), ANSI/ASME B1.20.1]	**0**	**D**							
R 1½" [(BSPT), EN 10226/PT (JIS-T), JIS B 0203]	**1**	**D**							
G 1½" [(BSPP), EN ISO 228-1/PF (JIS-P), JIS B 0202]	**3**	**D**							
Welded flange, 316L stainless steel, raised face									
1½" ASME, 150 lb	**5**	**D**							
1½" ASME, 300 lb	**5**	**E**							
1½" ASME, 600 lb	**5**	**F**							
2" ASME, 150 lb	**5**	**G**							
2" ASME, 300 lb	**5**	**H**							
2" ASME, 600 lb	**5**	**J**							
3" ASME, 150 lb	**5**	**K**							
3" ASME, 300 lb	**5**	**L**							
3" ASME, 600 lb	**5**	**M**							
4" ASME, 150 lb	**5**	**N**							
4" ASME, 300 lb	**5**	**P**							
4" ASME, 600 lb	**5**	**Q**							
Welded flange, 316L stainless steel, Type A flat faced									
DN 40, PN 16	**6**	**C**							
DN 40, PN 40	**6**	**D**							
DN 50, PN 16	**6**	**E**							
DN 50, PN 40	**6**	**F**							
DN 80, PN 16	**6**	**G**							
DN 80, PN 40	**6**	**H**							
DN 100, PN 16	**6**	**J**							
DN 100, PN 40 (Note: Flange bolting patterns and facings dimensionally correspond to the applicable ASME B16.5 or EN 1092-1 standard.)	**6**	**K**							
Probe length									
(length from flange face) (threaded lengths include process thread)									
Note: No Y01 needed in Order code for standard lengths									
Extended cable, 3 000 mm (118.11 inch), length can be shortened by customer			**A**						
Extended cable, 6 000 mm (236.22 inch), length can be shortened by customer			**B**						
Add Order code Y01 and plain text: "Insertion length ... mm"									
Extended cable, 500 ... 1 000 mm (19.69 ... 39.37 inch)			**E**						
Extended cable, 1 001 ... 5 000 mm (39.41 ... 196.85 inch)			**F**						
Extended cable, 5 001 ... 10 000 mm (196.89 ... 393.70 inch)			**G**						
Extended cable, 10 001 ... 15 000 mm (393.74 ... 590.55 inch)			**H**						
Extended cable, 15 001 ... 20 000 mm (590.59 ... 787.40 inch)			**J**						
Extended cable, 20 001 ... 25 000 mm (787.44 ... 984.25 inch)			**K**						

© Siemens 2020

Selection and ordering data

	Article No.
Pointek CLS300 RF Capacitance point level switch, cable design.	**7ML5651-** ■ ■ ■ ■ ■ - ■ ■ ■ ■
Detects level and interface in aggressive liquids, solids, slurries, and foam. Cable extension options to 25 m (82.02 ft), adaptable sensitivity, with active shield to tune out build-up on probe.	
Thermal isolator	
Without thermal isolator	**0**
With thermal isolator [for process connection temperatures over 85 °C (185 °F)]	**1**
Wetted seals	
FKM	**0**
FFKM [for process temperatures above -20 °C (-4 °F)]	**1**
Probe material	
Bare 316L stainless steel cable, PEEK isolators and 316L stainless steel cable weight	**0**
PFA coated cable, PEEK isolators and 316L stainless steel cable weight	**1**
Approvals	
Dust Ignition Proof with IS Probe: CE, RCM, ATEX II ½ D T100 °C	**C**
Flameproof Enclosure with IS Probe: CE, RCM, ATEX II ½ G EEx d[ia] IIC T6 ... T1, ATEX II ½ D T100 °C	**D**
Flameproof Enclosure with IS Probe, with WHG approval: CE, RCM, ATEX II ½ G EEx d[ia] IIC T6 ... T1, ATEX II ½ D T100 °C	**E**
Dust Ignition Proof with IS Probe:CSA/FM Class II, Div. 1, Groups E, F, G, CSA/FM Class III T4	**F**
Explosion Proof Enclosure with IS Probe: CSA/FM Class I, Div. 1, Groups A, B, C, D, CSA/FM Class II, Div. 1, Groups E, F, G, CSA/FM Class III T4	**G**
General Purpose (CSA, FM)	**H**
General Purpose (CE, RCM)	**J**
General Purpose with WHG approval (CSA, FM, CE, RCM)	**K**
Enclosure and lid	
Aluminum epoxy coated	
2 x ½" NPT via adapter - cable inlet, IP65	**A**
2 x M20 x 1.5 cable inlet, IP65	**B**
2 x ½" NPT via adapter - cable inlet, IP68	**C**
2 x M20 x 1.5 cable inlet, IP68	**D**
Active shield length	
Standard length - (125 mm threaded, 105 mm flanged)	**0**
Extended shield - (250 mm threaded, 230 mm flanged)	**1**
Extended shield - (400 mm threaded, 380 mm flanged)[1]	**2**

[1] Available with Probe version options A, B, F ... K, only [≥ 1 000 mm (39.7 inch)].

	Order code
Further designs	
Please add "**-Z**" to Article No. and specify Order code(s).	
Total insertion length: enter the total insertion length in plain text description	**Y01**
Stainless steel tag [70 x 13 mm (2.75 x 0.5 inch)]: Measuring-point number/identification (max. 27 characters) specify in plain text	**Y15**
Manufacturer's test certificate: M to DIN 55350, Part 18 and to ISO 9000	**C11**
Material Inspection Certificate Type 3.1 per EN 10204	**C12**
INMETRO[1]	**E34**
Operating Instructions	
All literature is available to download for free, in a range of languages, at	
http://www.siemens.com/processinstrumentation/documentation.	
Accessories	See page **4/69**

[1] Available only with Approvals options C, D, E.

© Siemens 2020

Pointek CLS300 - Standard

Selection and ordering data

	Article No.
Pointek CLS300 RF Capacitance point level switch, high temperature design. ↗	**7ML5652-** ■ ■ ■ **0** ■ **-** ■ ■ ■ ■
Detects level and interface in aggressive liquids, solids, slurries, and foam. Adjustable, 1 m (3.28 ft), insertion, adaptable sensitivity, with active shield to tune out build-up on probe.	
↗ Click on the Article No. for the online configuration in the PIA Life Cycle Portal.	
Process connection	
Threaded, 316L stainless steel	
¾" NPT [(Taper), ANSI/ASME B1.20.1]	**0 A**
1" NPT [(Taper), ANSI/ASME B1.20.1]	**0 B**
1¼" NPT [(Taper), ANSI/ASME B1.20.1]	**0 C**
1½" NPT [(Taper), ANSI/ASME B1.20.1]	**0 D**
R ¾" [(BSPT), EN 10226/PT (JIS-T), JIS B 0203]	**1 A**
R 1" [(BSPT), EN 10226/PT (JIS-T), JIS B 0203]	**1 B**
R 1½" [(BSPT), EN 10226/PT (JIS-T), JIS B 0203]	**1 D**
G ¾" [(BSPP), EN ISO 228-1/PF (JIS-P), JIS B 0202]	**3 A**
G 1" [(BSPP), EN ISO 228-1/PF (JIS-P), JIS B 0202]	**3 B**
G 1½" [(BSPP), EN ISO 228-1/PF (JIS-P), JIS B 0202]	**3 D**
Welded flange, 316L stainless steel, raised face	
1" ASME, 150 lb	**5 A**
1" ASME, 300 lb	**5 B**
1" ASME, 600 lb	**5 C**
1½" ASME, 150 lb	**5 D**
1½" ASME, 300 lb	**5 E**
1½" ASME, 600 lb	**5 F**
2" ASME, 150 lb	**5 G**
2" ASME, 300 lb	**5 H**
2" ASME, 600 lb	**5 J**
3" ASME, 150 lb	**5 K**
3" ASME, 300 lb	**5 L**
3" ASME, 600 lb	**5 M**
4" ASME, 150 lb	**5 N**
4" ASME, 300 lb	**5 P**
4" ASME, 600 lb	**5 Q**
Welded flange, 316L stainless steel, Type A flat faced	
DN 25, PN 16	**6 A**
DN 25, PN 40	**6 B**
DN 40, PN 16	**6 C**
DN 40, PN 40	**6 D**
DN 50, PN 16	**6 E**
DN 50, PN 40	**6 F**
DN 80, PN 16	**6 G**
DN 80, PN 40	**6 H**
DN 100, PN 16	**6 J**
DN 100, PN 40	**6 K**
(Note: Flange bolting patterns and facings dimensionally correspond to the applicable ASME B16.5 or EN 1092-1 standard.)	
Probe length	
(length from flange face) (threaded lengths include process thread)	
Note: No Y01 needed in Order code for standard lengths	
Standard version rod, 350 mm (13.78 inch)	**A**
Extended rod, length 500 mm (19.69 inch)	**B**
Extended rod, length 750 mm (29.53 inch)	**C**
Extended rod, length 1 000 mm (39.37 inch)	**D**

	Article No.
Pointek CLS300 RF Capacitance point level switch, high temperature design.	**7ML5652-** ■ ■ ■ **0** ■ **-** ■ ■ ■ ■
Detects level and interface in aggressive liquids, solids, slurries, and foam. Adjustable, 1 m (3.28 ft), insertion, adaptable sensitivity, with active shield to tune out build-up on probe.	
Add Order code Y01 and plain text: "Insertion length ... mm"	
Extended rod, factory adjusted length 250 ... 499 mm (9.8 ... 19.65 inch)	**E**
Extended rod, factory adjusted length 500 ... 749 mm (19.69 ... 29.49 inch)	**F**
Extended rod, factory adjusted length 750 ... 999 mm (29.53 ... 39.3 inch)	**G**
Wetted seals	
Graphite	**0**
Probe material	
316L stainless steel with ceramic (ZrO_2) isolators	**0**
Approvals	
Dust Ignition Proof with IS Probe: CE, RCM, ATEX II ½ D T100 °C	**C**
Flameproof Enclosure with IS Probe: CE, RCM, ATEX II ½ G EEx d[ia] IIC T6 ... T1, ATEX II ½ D T100 °C	**D**
Flameproof Enclosure with IS Probe with WHG approval: CE, RCM, ATEX II ½ G EEx d[ia] IIC T6 ... T1, ATEX II ½ D T100 °C	**E**
Dust Ignition Proof with IS Probe: CSA/FM Class II, Div. 1, Groups E, F, G, CSA/FM Class III T4	**F**
Explosion Proof Enclosure with IS Probe: CSA/FM Class I, Div. 1, Groups A, B, C, D, CSA/FM Class II, Div. 1, Groups E, F, G, CSA/FM Class III T4	**G**
General Purpose (CSA, FM)	**H**
General Purpose (CE, RCM)	**J**
General Purpose with WHG approval (CSA, FM, CE, RCM)	**K**
Enclosure and lid	
Aluminum epoxy coated	
2 x ½" NPT via adapter - cable inlet, IP65	**A**
2 x M20 x 1.5 cable inlet, IP65	**B**
2 x ½" NPT via adapter - cable inlet, IP68	**C**
2 x M20 x 1.5 cable inlet, IP68	**D**
Active shield length	
Standard length - (125 mm threaded, 105 mm flanged)	**0**
Extended shield - (250 mm threaded, 230 mm flanged)[1]	**1**
Extended shield - (400 mm threaded, 380 mm flanged)[2]	**2**

[1] Available with Probe version options B ... D, F, G only [≥ 500 mm (19.69 inch)].

[2] Available with Probe version options C, D, and G only [≥ 750 mm (29.53 inch)].

© Siemens 2020

Selection and ordering data	Order code
Further designs	
Please add "**-Z**" to Article No. and specify Order code(s).	
Total insertion length: enter the total insertion length in plain text description[1]	**Y01**
Stainless steel tag [70 x 13 mm (2.75 x 0.5 inch)]: Measuring-point number/identification (max. 27 characters) specify in plain text	**Y15**
Manufacturer's test certificate: M to DIN 55350, Part 18 and to ISO 9000	**C11**
Material Inspection Certificate Type 3.1 per EN 10204	**C12**
INMETRO[2]	**E34**
Operating Instructions	
All literature is available to download for free, in a range of languages, at	
http://www.siemens.com/processinstrumentation/documentation.	
Accessories	See page **4/69**

[1] Not available with Probe length option B.

[2] Available only with Approvals options C, D, E.

© Siemens 2020

Characteristic curves

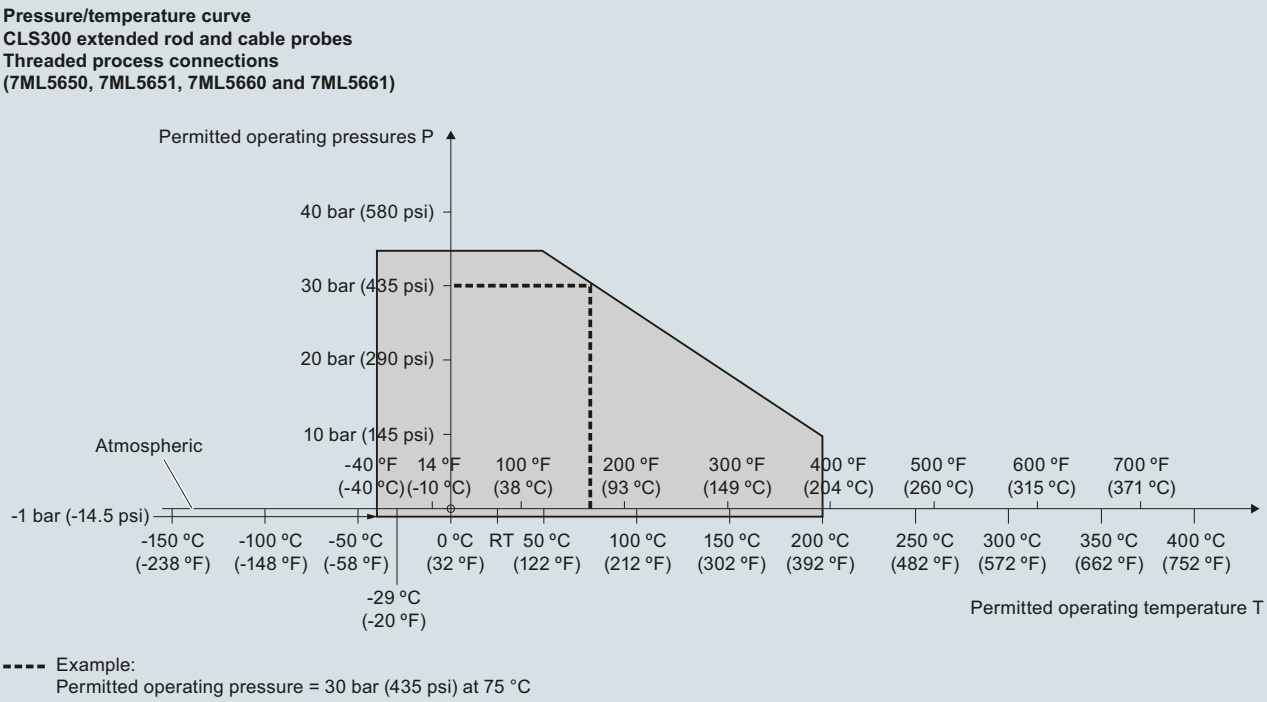

Pointek CLS300 process pressure/temperature derating curves (7ML5650, 7ML5651, 7ML5660, and 7ML5661)

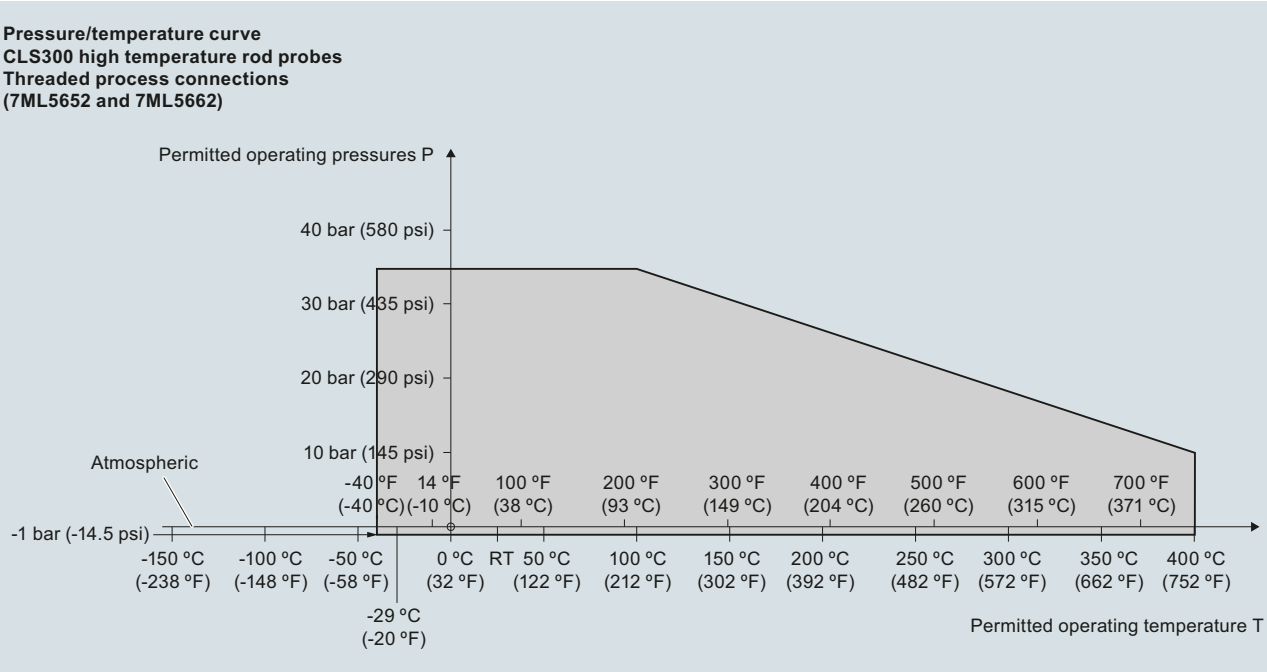

Pointek CLS300 process pressure/temperature derating curves (7ML5652 and 7ML5662)

© Siemens 2020

Characteristic curves (continued)

Pressure/temperature curve
CLS300 extended rod and cable probes
ASME flanged process connections
(7ML5650, 7ML5651, 7ML5660 and 7ML5661)

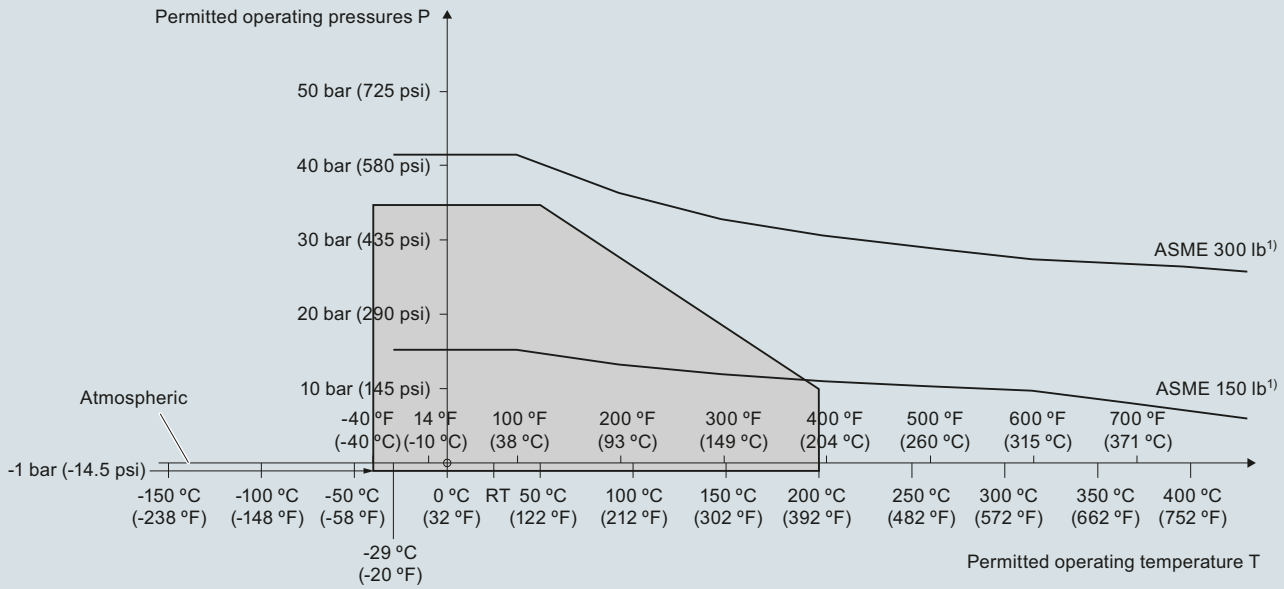

1) The curve denotes the minimum allowable flange class for the shaded area below.

Pointek CLS300 process pressure/temperature derating curves (7ML5650, 7ML5651, 7ML5660, and 7ML5661)

© Siemens 2020

Characteristic curves (continued)

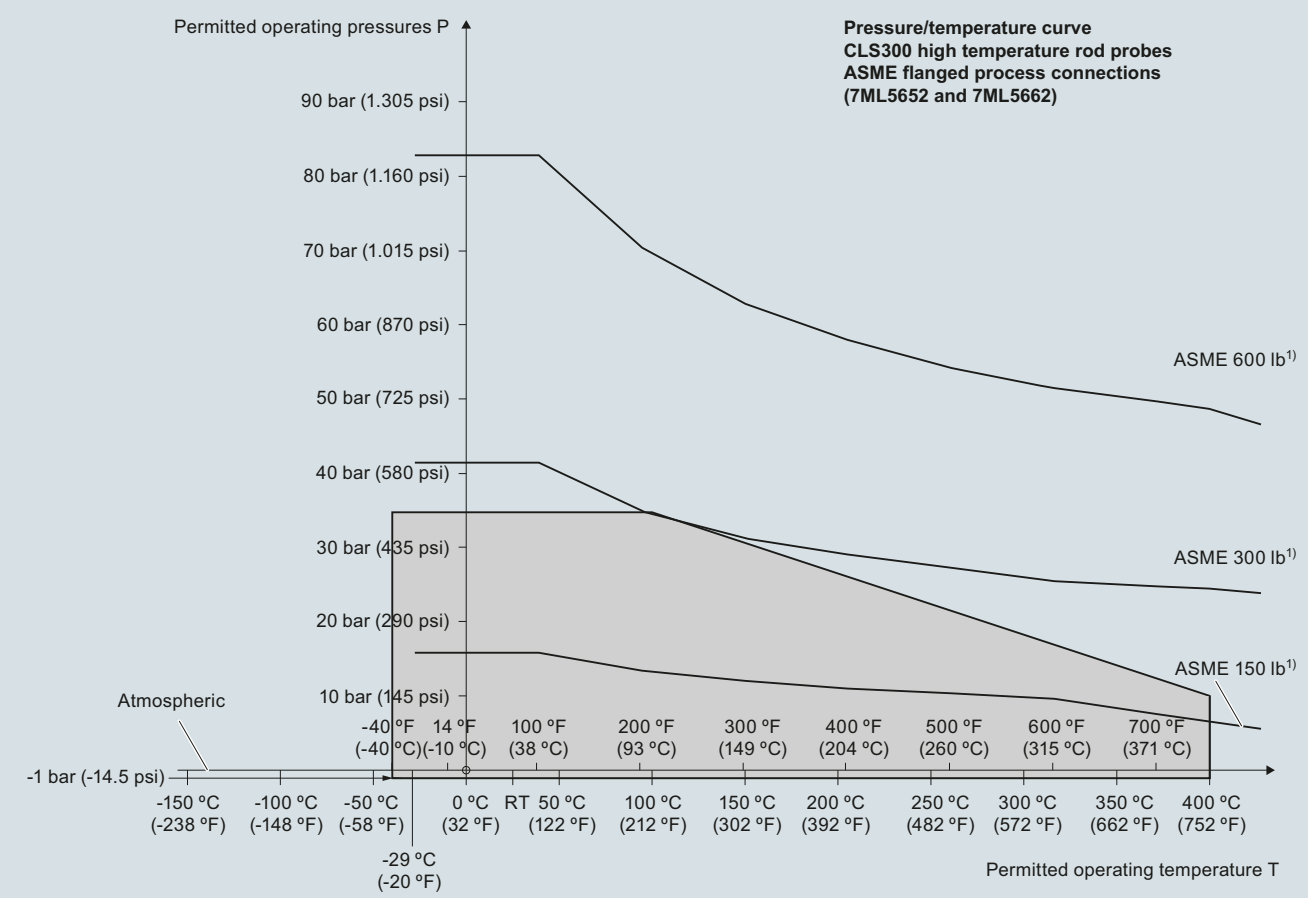

1) The curve denotes the minimum allowable flange class for the shaded area below.

Pointek CLS300 process pressure/temperature derating curves (7ML5652 and 7ML5662)

© Siemens 2020

Characteristic curves (continued)

Pressure/temperature curve
CLS300 extended rod and cable probes
EN flanged process connections
(7ML5650, 7ML5651, 7ML5660 and 7ML5661)

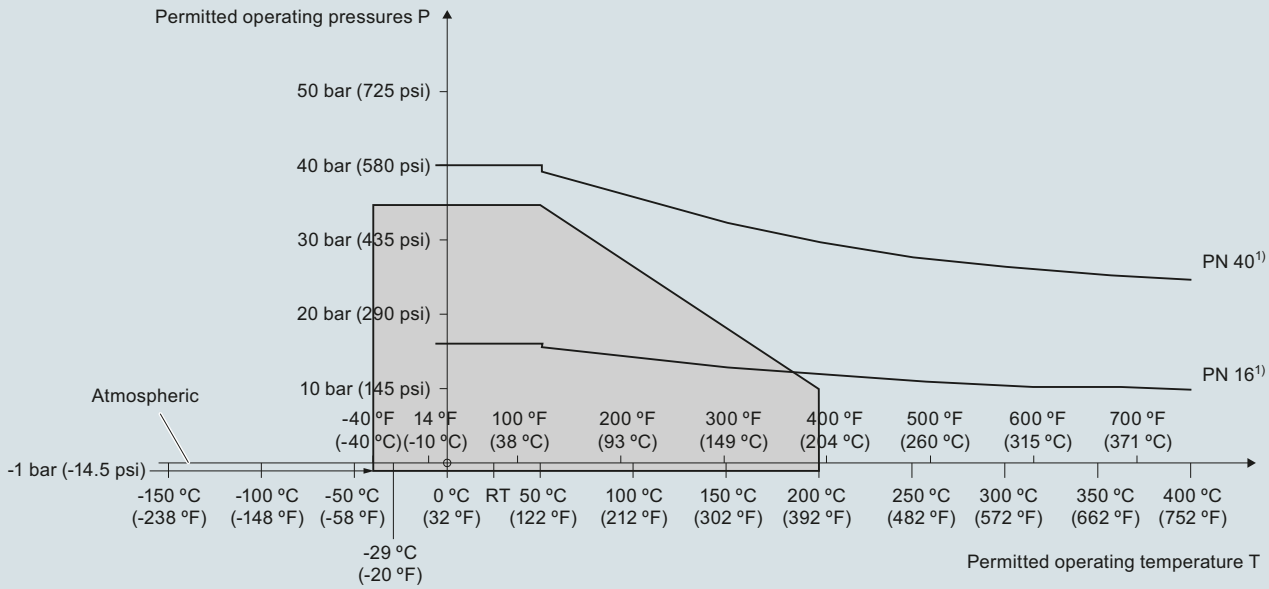

[1)] The curve denotes the minimum allowable flange class for the shaded area below.

Pointek CLS300 process pressure/temperature derating curves (7ML5650, 7ML5651, 7ML5660, and 7ML5661)

Pressure/Temperature Curve
CLS300 High Temperature Rod Probes
EN Flanged Process Connections (7ML5652 and 7ML5662)

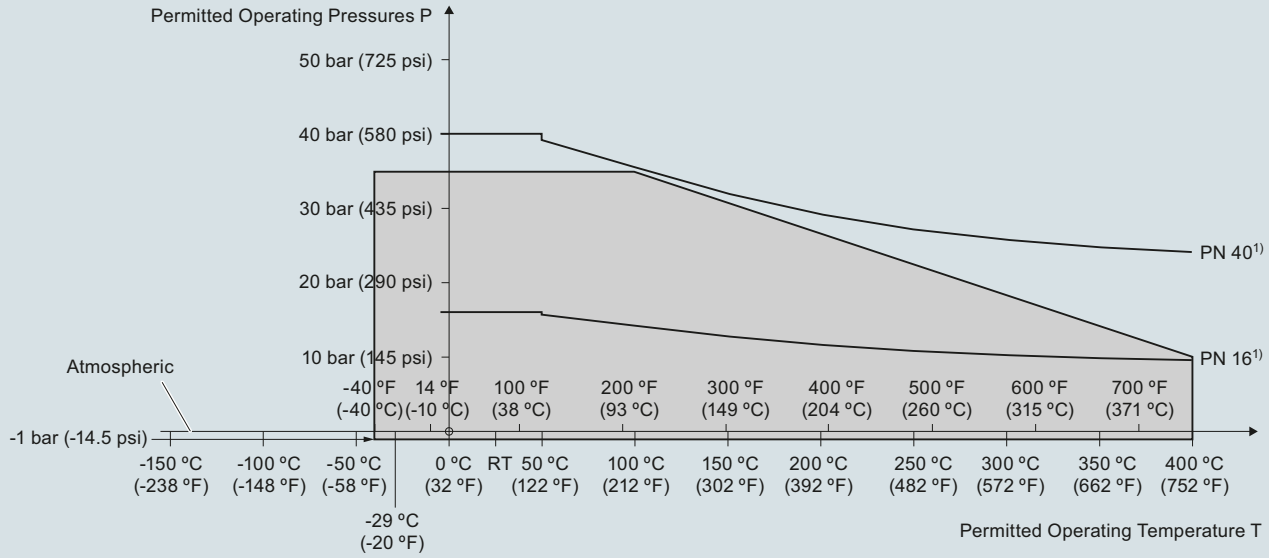

[1)] The curve denotes the minimum allowable flange class for the shaded area below.

Pointek CLS300 process pressure/temperature derating curves (7ML5652 and 7ML5662)

© Siemens 2020

Dimensional drawings

Rod version
Threaded (7ML5650 and 7ML5660)

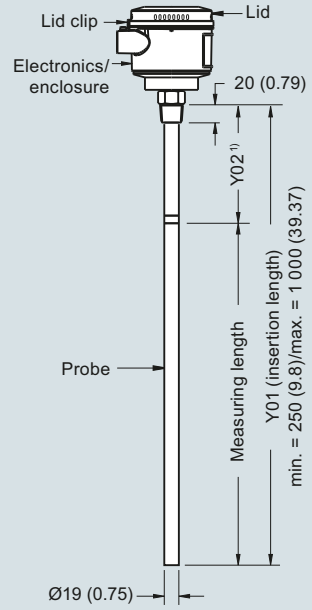

High temperature rod version
Threaded (7ML5652 and 7ML5662)

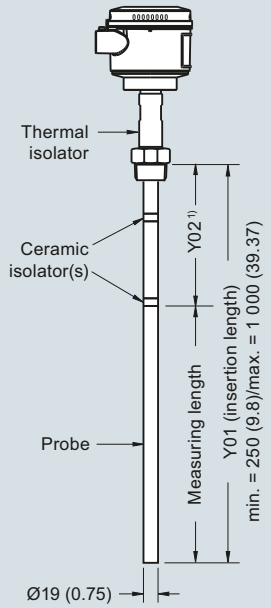

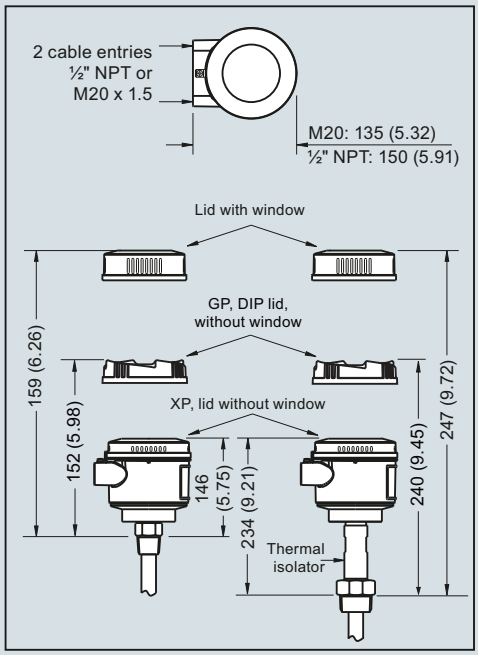

Cable version, non-insulated
Threaded (7ML5651 and 7ML5661)

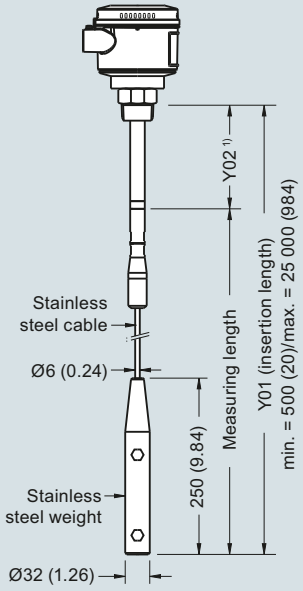

Cable version, insulated
Threaded (7ML5651 and 7ML5661)

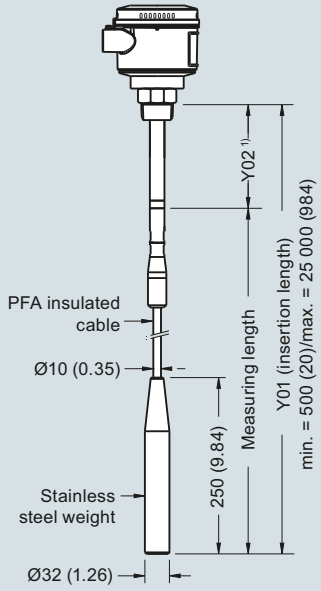

Note:

1) Extended Active Shield (Y02): standard length 125 (4.92). Optional active shield lengths: 250 (9.84) or 400 (15.75).

Pointek CLS300 threaded process connections, dimensions in mm (inch)

© Siemens 2020

Dimensional drawings (continued)

Rod version
Welded flange (7ML5650 and 7ML5660)

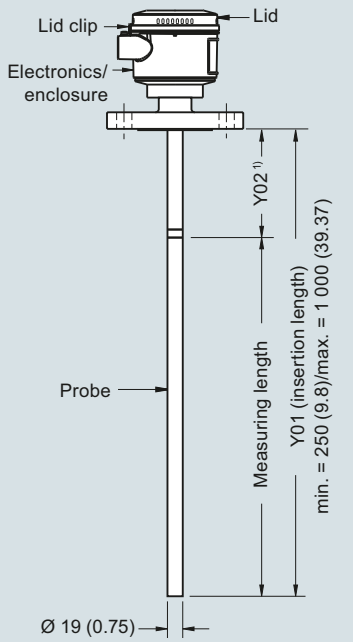

High temperature rod version
Welded flange
(7ML5652 and 7ML5662)

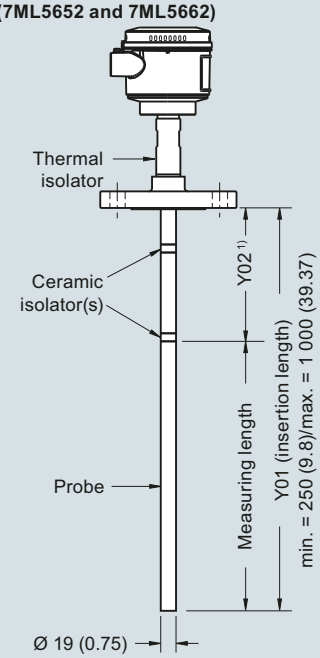

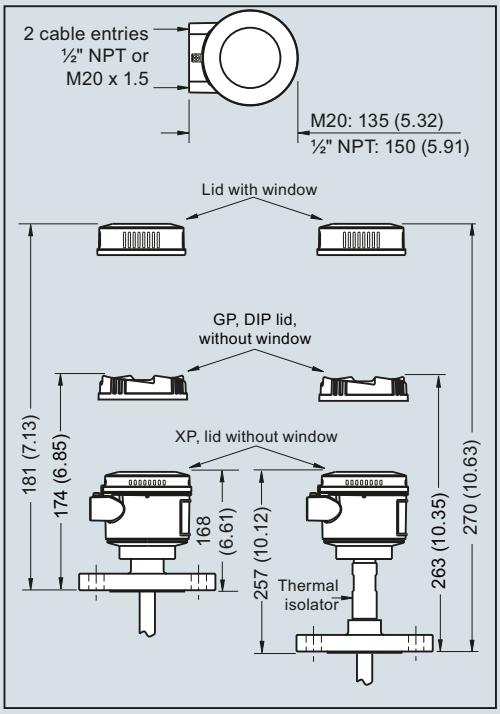

Cable version, non-insulated
Welded flange (7ML5651 and 7ML5661)

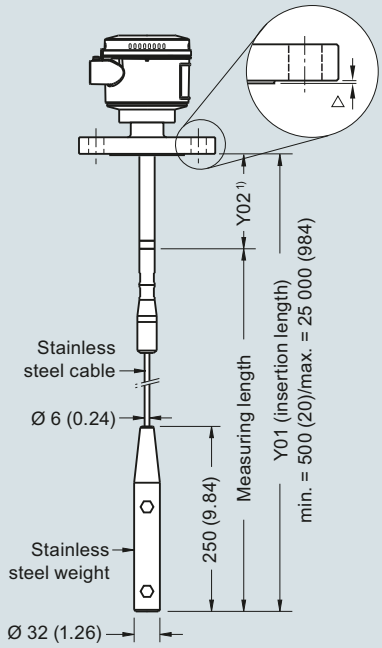

Cable version, insulated
Welded flange (7ML5651 and 7ML5661)

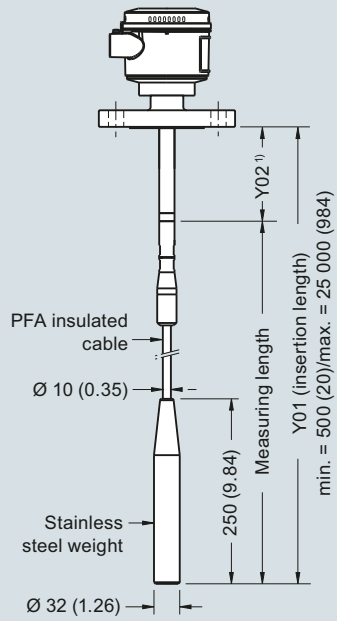

Flange Facing (raised face)	
Flange Class	**Facing thickness**
△ ASME 150/300	2 (0.08)
△ ASME 600/900	7 (0.28)
△ PN16/40	2 (0.08)

Note:

1) Extended Active Shield (Y02): standard length 105 (4.13). Optional active shield lengths: 230 (9.06) or 380 (14.96).
Insertion length does not include any raised face/gasket face dimension (see Flange Facing Table above)

Pointek CLS300 flanged process connections, dimensions in mm (inch)

© Siemens 2020

Circuit diagrams

Wiring: Pointek CLS300 standard

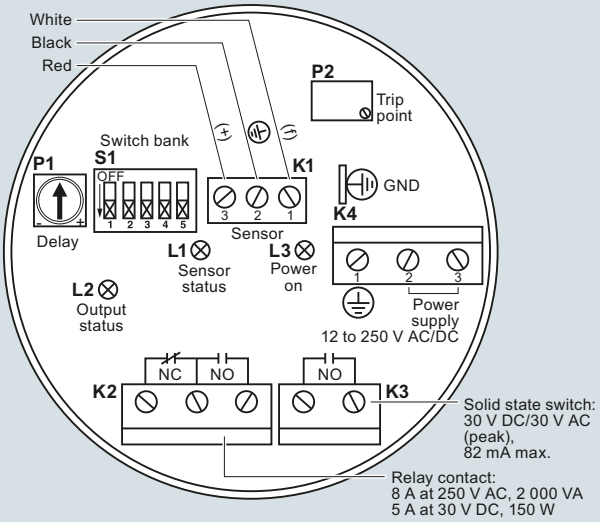

Notes:
- Identification label is on underside of lid. Switch and potentiometer settings are for illustration purposes only (refer to operation/setup in manual).
- All field wiring must have insulation suitable for at least 250 V.
- Relay contact terminals are for use with equipment having no accessible live parts and wiring having insulation suitable for at least 250 V.
- Maximum working voltage between adjacent relay contacts shall be 250 V.
- Refer to the Instruction manual or contact Siemens representative for detailed wiring information.

Wiring: Pointek CLS300 digital

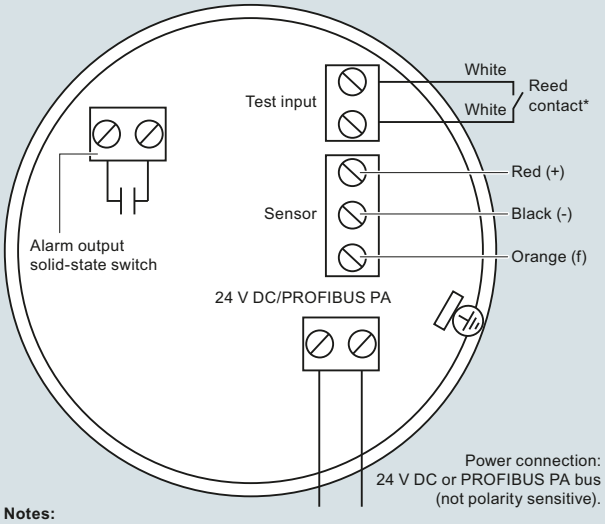

Notes:
Refer to the instruction manual or contact a Siemens representative for detailed wiring information.

***Magnet activated sensor test**
A magnet can be used to test the sensor without opening the lid of the Pointek CLS300 digital version. Bring the magnet close to the test area indicated on the enclosure. The sensor test starts and finishes automatically after 10 seconds.

Pointek CLS300 connections

© Siemens 2020

Overview

Pointek CLS300 (digital version) is an inverse frequency shift capacitance level and material detection switch with optional rod/cable choices and configurable output. It is ideal for detecting liquids, solids, slurries, foam, and interfaces in demanding conditions where high pressure and temperatures are present and has the ability to tune out buildup on the probe. The digital version includes PROFIBUS PA, an LCD display, and advanced diagnostic features.

Benefits

- Active-Shield technology so measurement is unaffected by material buildup or nozzle interference in active shield section
- Performs in extremely abrasive conditions because of solid rod construction
- Push-button calibration, full-function diagnostics
- High sensitivity allows installation in a wide range of liquids, solids or slurry applications
- Integral LCD display allows for easy menu-driven setup
- PROFIBUS PA communication (SIMATIC PDM compatible)

Application

Pointek CLS300 digital version provides an integral LCD display for stand-alone use, with PROFIBUS PA communication (Profile version 3.0, Class B) when required. Solid-state switch alarm is standard.

The robust design of CLS300 makes it specifically applicable for heavy solids applications where abrasive materials occur as in the mining industry.

The fully potted electronics are unaffected by condensation, dust or vibration.

Wetted parts are made of stainless steel with a PFA shield for high chemical resistance, and of ceramic and stainless steel for high temperature version. Materials with low or high dielectric constants can be accurately detected. The unique Active Shield suppresses interference from material buildup or long installation nozzles.

The unique modular design of the Pointek CLS300 provides a wide range of configurations, process connections, extensions and approvals to meet the temperature and pressure requirements of specific applications. The modular design makes ordering easier and reduces stocking requirements. A wide range of probe configurations are available, including rod and cable versions.

- Key Applications: liquids, slurries, bulk solids, relatively high pressure and temperature, hazardous areas, milling and mining applications

Configuration

Installation

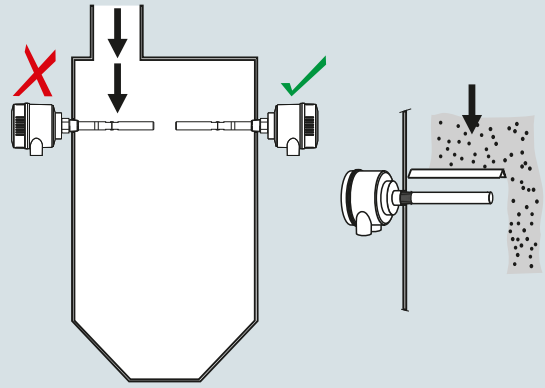

Keep unit out of path of falling material, or protect probe from falling material.

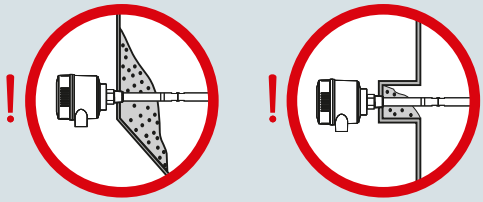

Build up of material in active shield area does not affect switch operation.

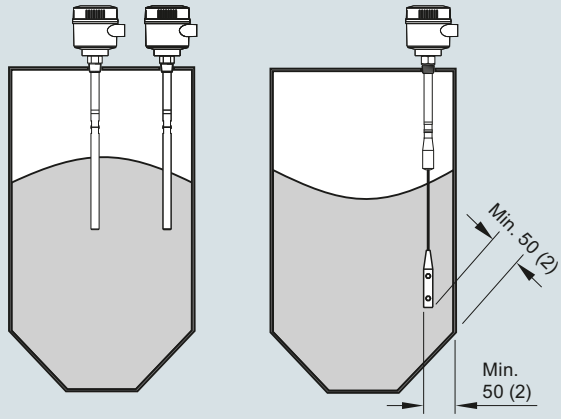

Install probe at least 50 (2) from tank wall.
Note angle of repose and adjust accordingly.

Pointek CLS300 installation, dimensions in mm (inch)

© Siemens 2020

Technical specifications

Mode of operation	
Measuring principle	Inverse frequency shift capacitive level detection
Input	
Measured variable	Change in picoFarad (pF)
Output	
Solid-state output	
• Output	Galvanically isolated
• Protection	Against reversed polarity (bipolar)
• Max. switching voltage	• 30 V (DC) • 30 V peak (AC)
• Max. load current	82 mA
• Voltage drop	< 1 V, typical at 50 mA
• Time delay (pre or post switching)	Programmable by user (0 ... 100 s)
Fail-safe mode	Min. or max.
Connection	Removable terminal block
Accuracy	
Resolution	
• Min. sensitivity (pF)	1 % change in actual capacitance
• Max. temperature error	0.2 % of actual capacitance value
Rated operating conditions[1]	
Installation conditions	
• Location	Indoor/outdoor
Ambient conditions	
• Ambient temperature	-40 ... +85 °C (-40 ... +185 °F)[2]
• Storage temperature	-40 ... +85 °C (-40 ... +185 °F)
Medium conditions	Liquids, bulk solids, slurries, interfaces, and applications with viscous materials
• Relative dielectric constant ε_r	Min. 1.5
• Process temperature	
- Rod/Cable version	-40 ... +200 °C (-40 ... +392 °F)[2]
- High Temperature version	-40 ... +400 °C (-40 ... +752 °F)
• Process pressure[3]	-1 ... +35 bar g (-14.6 ... +511 psi g)
Design	
Material (enclosure)	Powder-coated aluminum with gasket
Degree of protection	Standard: Type 4/NEMA 4/IP65 Optional: Type 4/NEMA 4/IP68
Cable inlet	2 x M20 x 1.5 thread (option: 2 x ½" NPT conduit entry including 1 plugged entry)
Controls and displays	
Local display	LCD
Configuration	• Locally, using 3 button keypad (for standalone operation) • Remotely, using SIMATIC PDM (for installation on a network)

Power supply	
Bus voltage (at process connection)	• Standard: 12 ... 30 V DC • Intrinsically Safe: 12 ... 24 V DC
Current consumption	12.5 mA
Certificates and approvals	
General Purpose	CSA, FM, CE, RCM
Dust Ignition Proof	ATEX II 1/2 D, 2 D IP6X T100 °C
Flameproof Enclosure With IS Probe	ATEX II 1/2 G EEx d[ia] IIC T6 ... T4 ATEX II 1/2 D T100 °C
Dust Ignition Proof With IS Probe	CSA/FM Class II, Div. 1, Groups E, F, G CSA/FM Class III T4
Intrinsically Safe[4]	ATEX II 1 G EEx ia IIC T6 ... T4 ATEX II 1/2 D, 2 D IP6X T100 °C CSA/FM Class I, Div. 1, Groups A, B, C, D CSA/FM Class II, Div. 1, Groups E, F, G CSA/FM Class III T4
Non-incendive	CSA/FM Class I, Div. 2, Groups A, B, C, D CSA/FM Class II, Div. 2, Groups F, G CSA/FM Class III T4 or T6
Explosion Proof with IS Probe	CSA/FM Class I, Div. 1, Groups A, B, C, D CSA/FM Class II, Div. 1, Groups E, F, G CSA/FM Class III T4
Marine	Lloyds Register of Shipping, Categories ENV1, ENV2, and ENV5
Others	Pattern Approval (China)
Communication	PROFIBUS PA (IEC 61158 CPF3 CP3/2) Bus physical layer: IEC 61158-2 MBP-(IS) Device profile: PROFIBUS PA profile for Process Control Devices Version 3.0, Class B FISCO field device

1) When operation is in areas classified as hazardous, observe restrictions according to relevant certificate. See also Pressure/Temperature curves starting on page 5/57.

2) Thermal isolator is used if process connection temperature exceeds 85 °C (185 °F)

3) Pressure rating of process seal is temperature dependent. See Pressure/Temperature curves starting on page 5/57.

4) Barrier or Intrinsically Safe power supply required for Intrinsically Safe protection

Design: Probe			
	Rod version	**High Temperature version**	**Cable version**
Length	Min. 250 mm (9.8 inch), max. 1 000 mm (40 inch)	Min. 250 mm (9.8 inch), max. 1 000 mm (40 inch)	Min. 1 000 mm (40 inch), max. 25 000 mm (984 inch)
Sensor wetted parts	PFA (no insulation on active probe), 316L stainless steel, PEEK isolators	Ceramic (ZrO_2[1]) isolators (no insulation on active probe), 316L stainless steel	316 stainless steel, optional PFA, PEEK isolators
O-ring seal material	FKM (optional FFKM)[2]	Graphite[2]	FKM (optional FFKM)[2]
Thermal isolator	Optional	Standard	Optional
Extension	User selectable length	User selectable length	User selectable cable length

1) Zirconium Oxide

2) For caustic materials, consult a local sales person for alternative O-rings. For more information, please visit http://www.automation.siemens.com/aspa_app.

© Siemens 2020

Selection and ordering data

	Article No.
Pointek CLS300 RF Capacitance point level switch, digital, rod design. ↗	**7ML5660-** ■ ■ ■ ■ ■ - ■ ■ ■ ■
Detects level and interface in aggressive liquids, solids, slurries, and foam. Adjustable, 1 m (3.28 ft), insertion, adaptable sensitivity, and active shield to tune out build-up on probe. With display and digital communications.	
↗ Click on the Article No. for the online configuration in the PIA Life Cycle Portal.	
Process connection	
Threaded, 316L stainless steel	
¾" NPT [(Taper), ANSI/ASME B1.20.1]	0 A
1" NPT [(Taper), ANSI/ASME B1.20.1]	0 B
1¼" NPT [(Taper), ANSI/ASME B1.20.1]	0 C
1½" NPT [(Taper), ANSI/ASME B1.20.1]	0 D
R ¾" [(BSPT), EN 10226/PT (JIS-T), JIS B 0203]	1 A
R 1" [(BSPT), EN 10226/PT (JIS-T), JIS B 0203]	1 B
R 1½" [(BSPT), EN 10226/PT (JIS-T), JIS B 0203]	1 D
G ¾" [(BSPP), EN ISO 228-1/PF (JIS-P), JIS B 0202]	3 A
G 1" [(BSPP), EN ISO 228-1/PF (JIS-P), JIS B 0202]	3 B
G 1½" [(BSPP), EN ISO 228-1/PF (JIS-P), JIS B 0202]	3 D
Welded flange, 316L stainless steel, raised face	
1" ASME, 150 lb	5 A
1" ASME, 300 lb	5 B
1" ASME, 600 lb	5 C
1½" ASME, 150 lb	5 D
1½" ASME, 300 lb	5 E
1½" ASME, 600 lb	5 F
2" ASME, 150 lb	5 G
2" ASME, 300 lb	5 H
2" ASME, 600 lb	5 J
3" ASME, 150 lb	5 K
3" ASME, 300 lb	5 L
3" ASME, 600 lb	5 M
4" ASME, 150 lb	5 N
4" ASME, 300 lb	5 P
4" ASME, 600 lb	5 Q
Welded flange, 316L stainless steel, Type A flat faced	
DN 25, PN 16	6 A
DN 25, PN 40	6 B
DN 40, PN 16	6 C
DN 40, PN 40	6 D
DN 50, PN 16	6 E
DN 50, PN 40	6 F
DN 80, PN 16	6 G
DN 80, PN 40	6 H
DN 100, PN 16	6 J
DN 100, PN 40	6 K
(Note: Flange bolting patterns and facings dimensionally correspond to the applicable ASME B16.5 or EN 1092-1 standard.)	
Probe length	
(length from flange face) (threaded lengths include process thread)	
Note: No Y01 needed in Order code for standard lengths	
Standard version, rod 350 mm (13.78 inch)	A
Extended rod, length 500 mm (19.69 inch)	B
Extended rod, length 750 mm (29.53 inch)	C
Extended rod, length 1 000 mm (39.37 inch)	D

	Article No.
Pointek CLS300 RF Capacitance point level switch, digital, rod design.	**7ML5660-** ■ ■ ■ ■ ■ - ■ ■ ■ ■
Detects level and interface in aggressive liquids, solids, slurries, and foam. Adjustable, 1 m (3.28 ft), insertion, adaptable sensitivity, and active shield to tune out build-up on probe. With display and digital communications.	
Add Order code Y01 and plain text: "Insertion length ... mm"	
Extended rod, factory adjusted length 250 ... 499 mm (9.8 ... 19.65 inch)	E
Extended rod, factory adjusted length 500 ... 749 mm (19.69 ... 29.49 inch)	F
Extended rod, factory adjusted length 750 ... 999 mm (29.53 ... 39.3 inch)	G
Thermal isolator	
Without thermal isolator	0
With thermal isolator [for process connection temperatures over 85 °C (185 °F)]	1
Wetted seals	
FKM	0
FFKM [for process temperatures above -20 °C (-4 °F)]	1
Probe material	
316L stainless steel with PFA lining and PEEK isolators	0
Approvals	
Dust Ignition Proof: CE, RCM, ATEX II ½ D, 2 D IP6X T100 °C	B
Intrinsically Safe[1] CE, RCM, ATEX II 1 G EEx ia IIC T6 ... T4, ATEX II ½ D, 2 D IP6X T100 °C	C
Flameproof Enclosure with IS Probe: CE, RCM, ATEX II ½ G EEx d[ia] IIC T6 ... T4, ATEX II ½D T100 °C	D
Dust Ignition Proof with IS Probe: CSA/FM Class II, Div. 1, Groups E, F, G CSA/FM Class III T4	E
Intrinsically Safe[1] CSA/FM Class I, Div. 1, Groups A, B, C, D CSA/FM Class II, Div. 1, Groups E, F, G CSA/FM Class III T4	F
Explosion Proof Enclosure with IS Probe: CSA/FM Class I, Div. 1, Groups A, B, C, D CSA/FM Class II, Div. 1, Groups E, F, G CSA/FM Class III T4	G
General Purpose (CSA, FM)	H
General Purpose (CSA, FM, CE, RCM)	J
Enclosure and Lid	
Aluminum epoxy coated	
2 x ½" NPT via adapter - cable inlet, IP65	A
2 x M20 x 1.5 cable inlet, IP65	B
2 x ½" NPT via adapter - cable inlet, IP68	C
2 x M20 x 1.5 cable inlet, IP68	D
Active shield length	
Standard length - (125 mm threaded, 105 mm flanged)	0
Extended shield - (250 mm threaded, 230 mm flanged)[2]	1
Extended shield - (400 mm threaded, 380 mm flanged)[3]	2

[1] Barrier or Intrinsically Safe power supply required for Intrinsically Safe protection.

[2] Available with Probe version options B ... D, F, G only [≥ 500 mm (19.69 inch)].

[3] Available with Probe version options C, D, and G only [≥ 750 mm (29.53 inch)].

© Siemens 2020

Selection and ordering data

	Order code
Further designs	
Please add "**-Z**" to Article No. and specify Order code(s).	
Total insertion length: enter the total insertion length in plain text description	**Y01**
Stainless steel tag [70 x 13 mm (2.75 x 0.5 inch)]: Measuring-point number/identification (max. 27 characters) specify in plain text	**Y15**
Manufacturer's test certificate: M to DIN 55350, Part 18 and to ISO 9000	**C11**
Material inspection Certificate Type 3.1 per EN 10204	**C12**
INMETRO[1)]	**E34**
Operating Instructions	
All literature is available to download for free, in a range of languages, at	

http://www.siemens.com/processinstrumentation/documentation.

Accessories	**See page 4/69**

1) Available only with Approvals options B and D.

	Article No.
Pointek CLS300 RF Capacitance point level switch, digital, cable design. ↗	**7ML5661-** ■ ■ ■ ■ ■ - ■ ■ ■ ■
Detects level and interface in aggressive liquids, solids, slurries, and foam. Cable extension options to 25 m (82.02 ft), adaptable sensitivity, with active shield to tune out build-up on probe. With display and digital communications.	
↗ Click on the Article No. for the online configuration in the PIA Life Cycle Portal.	
Process connection	
Threaded, 316L stainless steel	
1¼" NPT [(Taper), ANSI/ASME B1.20.1]	**0 C**
1½" NPT [(Taper), ANSI/ASME B1.20.1]	**0 D**
R 1½" [(BSPT), EN 10226/PT (JIS-T), JIS B 0203]	**1 D**
G 1½" [(BSPP), EN ISO 228-1/PF (JIS-P), JIS B 0202]	**3 D**
Welded flange, 316L stainless steel, raised face	
1½" ASME, 150 lb	**5 D**
1½" ASME, 300 lb	**5 E**
1½" ASME, 600 lb	**5 F**
2" ASME, 150 lb	**5 G**
2" ASME, 300 lb	**5 H**
2" ASME, 600 lb	**5 J**
3" ASME, 150 lb	**5 K**
3" ASME, 300 lb	**5 L**
3" ASME, 600 lb	**5 M**
4" ASME, 150 lb	**5 N**
4" ASME, 300 lb	**5 P**
4" ASME, 600 lb	**5 Q**
Welded flange, 316L stainless steel, Type A flat faced	
DN 40, PN 16	**6 C**
DN 40, PN 40	**6 D**
DN 50, PN 16	**6 E**
DN 50, PN 40	**6 F**
DN 80, PN 16	**6 G**
DN 80, PN 40	**6 H**
DN 100, PN 16	**6 J**
DN 100, PN 40	**6 K**
(Note: Flange bolting patterns and facings dimensionally correspond to the applicable ASME B16.5 or EN 1092-1 standard.)	
Probe length	
(length from flange face) (threaded lengths include process thread)	
Note: No Y01 needed in Order code for standard lengths	
Extended cable, 3 000 mm (118.11 inch), length can be shortened by customer	**A**
Extended cable, 6 000 mm (236.22 inch), length can be shortened by customer	**B**
Add Order code Y01 and plain text: "Insertion length ... mm"	
Extended cable, 500 ... 1 000 mm (19.69 ... 39.37 inch)	**E**
Extended cable, 1 001 ... 5 000 mm (39.41 ... 196.85 inch)	**F**
Extended cable, 5 001 ... 10 000 mm (196.89 ... 393.70 inch)	**G**
Extended cable, 10 001 ... 15 000 mm (393.74 ... 590.55 inch)	**H**
Extended cable, 15 001 ... 20 000 mm (590.59 ... 787.40 inch)	**J**
Extended cable, 20 001 ... 25 000 mm (787.44 ... 984.25 inch)	**K**

© Siemens 2020

Selection and ordering data

	Article No.
Pointek CLS300 RF Capacitance point level switch, digital, cable design.	**7ML5661-** ■ ■ ■ ■ - ■ ■ ■ ■
Detects level and interface in aggressive liquids, solids, slurries, and foam. Cable extension options to 25 m (82.02 ft), adaptable sensitivity, with active shield to tune out build-up on probe. With display and digital communications.	
Thermal isolator	
Without thermal isolator	0
With thermal isolator [for process connection temperatures over 85 °C (185 °F)]	1
Wetted seals	
FKM	0
FFKM [for process temperatures above -20 °C (-4 °F)]	1
Probe material	
Bare 316L stainless steel cable, PEEK isolators and 316L stainless steel cable weight	0
PFA coated cable, PEEK isolators and 316L stainless steel cable weight	1
Approvals	
Dust Ignition Proof: CE, RCM, ATEX II ½ D, 2 D IP6X T100 °C	B
Intrinsically Safe[1] CE, RCM, ATEX II 1 G EEx ia IIC T6 ... T4, ATEX II ½ D, 2 D IP6X T100 °C	C
Flameproof Enclosure with IS Probe: CE, RCM, ATEX II ½ G EEx d[ia] IIC T6 ... T4, ATEX II ½ D T100 °C	D
Intrinsically Safe[1] CSA/FM Class I, Div. 1, Groups A, B, C, D CSA/FM Class II, Div. 1, Groups E, F, G CSA/FM Class III T4	F
Explosion Proof Enclosure with IS Probe: CSA/FM Class I, Div. 1, Groups A, B, C, D CSA/FM Class II, Div. 1, Groups E, F, G CSA/FM Class III T4	G
General Purpose (CSA, FM)	H
General Purpose (CSA, FM, CE, RCM)	J
Enclosure and Lid	
Aluminum epoxy coated	
2 x ½" NPT via adapter - cable inlet, IP65	A
2 x M20 x 1.5 cable inlet, IP65	B
2 x ½" NPT via adapter - cable inlet, IP68	C
2 x M20 x 1.5 cable inlet, IP68	D
Active shield length	
Standard length - (125 mm threaded, 105 mm flanged)	0
Extended shield - (250 mm threaded, 230 mm flanged)	1
Extended shield - (400 mm threaded, 380 mm flanged)[2]	2

[1] Barrier or Intrinsically Safe power supply required for Intrinsically Safe protection.

[2] Available with Probe version options A, B, F ... K, only [≥ 1 000 mm (39.7 inch)].

	Order code
Further designs	
Please add "**-Z**" to Article No. and specify Order code(s).	
Total insertion length: enter the total insertion length in plain text description	**Y01**
Stainless steel tag [70 x 13 mm (2.75 x 0.5 inch)]: Measuring-point number/identification (max. 27 characters) specify in plain text	**Y15**
Manufacturer's test certificate: M to DIN 55350, Part 18 and to ISO 9000	**C11**
Material inspection Certificate Type 3.1 per EN 10204	**C12**
INMETRO[1]	**E34**
Operating Instructions	
All literature is available to download for free, in a range of languages, at	
http://www.siemens.com/processinstrumentation/documentation.	
Accessories	**See page 4/69**

[1] Available only with Approvals options B and D.

© Siemens 2020

Selection and ordering data

	Article No.
Pointek CLS300 RF Capacitance point level switch, digital, high temperature design. ↗	**7ML5662-** ■ ■ ■ **0** ■ **-** ■ ■ ■ ■
Detects level and interface in aggressive liquids, solids, slurries, and foam. Adjustable, 1 m (3.28 ft), insertion, adaptable sensitivity, with active shield to tune out build-up on probe. With display and digital communications.	
↗ Click on the Article No. for the online configuration in the PIA Life Cycle Portal.	
Process connection	
Threaded, 316L stainless steel	
¾" NPT [(Taper), ANSI/ASME B1.20.1]	**0 A**
1" NPT [(Taper), ANSI/ASME B1.20.1]	**0 B**
1¼" NPT [(Taper), ANSI/ASME B1.20.1]	**0 C**
1½" NPT [(Taper), ANSI/ASME B1.20.1]	**0 D**
R ¾" [(BSPT), EN 10226/PT (JIS-T), JIS B 0203]	**1 A**
R 1" [(BSPT), EN 10226/PT (JIS-T), JIS B 0203]	**1 B**
R 1½" [(BSPT), EN 10226/PT (JIS-T), JIS B 0203]	**1 D**
G ¾" [(BSPP), EN ISO 228-1/PF (JIS-P), JIS B 0202]	**3 A**
G 1" [(BSPP), EN ISO 228-1/PF (JIS-P), JIS B 0202]	**3 B**
G 1½" [(BSPP), EN ISO 228-1/PF (JIS-P), JIS B 0202]	**3 D**
Welded flange, 316L stainless steel, raised face	
1" ASME, 150 lb	**5 A**
1" ASME, 300 lb	**5 B**
1" ASME, 600 lb	**5 C**
1½" ASME, 150 lb	**5 D**
1½" ASME, 300 lb	**5 E**
1½" ASME, 600 lb	**5 F**
2" ASME, 150 lb	**5 G**
2" ASME, 300 lb	**5 H**
2" ASME, 600 lb	**5 J**
3" ASME, 150 lb	**5 K**
3" ASME, 300 lb	**5 L**
3" ASME, 600 lb	**5 M**
4" ASME, 150 lb	**5 N**
4" ASME, 300 lb	**5 P**
4" ASME, 600 lb	**5 Q**
Welded flange, 316L stainless steel, Type A flat faced	
DN 25, PN 16	**6 A**
DN 25, PN 40	**6 B**
DN 40, PN 16	**6 C**
DN 40, PN 40	**6 D**
DN 50, PN 16	**6 E**
DN 50, PN 40	**6 F**
DN 80, PN 16	**6 G**
DN 80, PN 40	**6 H**
DN 100, PN 16	**6 J**
DN 100, PN 40	**6 K**
(Note: Flange bolting patterns and facings dimensionally correspond to the applicable ASME B16.5 or EN 1092-1 standard.)	
Probe length	
(length from flange face) (threaded lengths include process thread)	
Note: No Y01 needed in Order code for standard lengths	
Standard version rod, 350 mm (13.78 inch)	**A**
Extended rod, length 500 mm (19.69 inch)	**B**
Extended rod, length 750 mm (29.53 inch)	**C**
Extended rod, length 1 000 mm (39.37 inch)	**D**

	Article No.
Pointek CLS300 RF Capacitance point level switch, digital, high temperature design.	**7ML5662-** ■ ■ ■ **0** ■ **-** ■ ■ ■ ■
Detects level and interface in aggressive liquids, solids, slurries, and foam. Adjustable, 1 m (3.28 ft), insertion, adaptable sensitivity, with active shield to tune out build-up on probe. With display and digital communications.	
Add Order code Y01 and plain text: "Insertion length ... mm"	
Extended rod, factory adjusted length 250 ... 499 mm (9.8 ... 19.65 inch)	**E**
Extended rod, factory adjusted length 500 ... 749 mm (19.69 ... 29.49 inch)	**F**
Extended rod, factory adjusted length 750 ... 999 mm (29.53 ... 39.3 inch)	**G**
Wetted seals	
Graphite	**0**
Probe material	
316L stainless steel with ceramic (ZrO_2)isolators	**0**
Approvals	
Dust Ignition Proof CE, RCM, ATEX II ½ D, 2 D IP6X T100 °C	**B**
Intrinsically Safe[1] CE, RCM, ATEX II 1 G EEx ia IIC T6 ... T4, ATEX II ½ D, 2 D IP6X T100 °C	**C**
Flameproof Enclosure with IS Probe: CE, RCM, ATEX II ½ G EEx d[ia] IIC T6 ... T4, ATEX II ½ D T100 °C	**D**
Intrinsically Safe[1] CSA/FM Class I, Div. 1, Groups A, B, C, D CSA/FM Class II, Div. 1, Groups E, F, G CSA/FM Class III T4	**F**
Explosion Proof Enclosure with IS Probe: CSA/FM Class I, Div. 1, Groups A, B, C, D CSA/FM Class II, Div. 1, Groups E, F, G CSA/FM Class III T4	**G**
General Purpose (CSA, FM)	**H**
General Purpose (CSA, FM, CE, RCM)	**J**
Enclosure and Lid	
Aluminum epoxy coated	
2 x ½" NPT via adapter - cable inlet, IP65	**A**
2 x M20 x 1.5 cable inlet, IP65	**B**
2 x ½" NPT via adapter - cable inlet, IP68	**C**
2 x M20 x 1.5 cable inlet, IP68	**D**
Active shield length	
Standard length - (125 mm threaded, 105 mm flanged)	**0**
Extended shield - (250 mm threaded, 230 mm flanged)[2]	**1**
Extended shield - (400 mm threaded, 380 mm flanged)[3]	**2**

[1] Barrier or Intrinsically Safe power supply required for Intrinsically Safe protection.

[2] Available with Probe version options B ... D, F, G only [≥ 500 mm (19.69 inch)].

[3] Available with Probe version options C, D, and G only [≥ 750 mm (29.53 inch)].

© Siemens 2020

Selection and ordering data

	Order code
Further designs	
Please add "**-Z**" to Article No. and specify Order code(s).	
Total insertion length: enter the total insertion length in plain text description	**Y01**
Stainless steel tag [70 x 13 mm (2.75 x 0.5 inch)]: Measuring-point number/identification (max. 27 characters) specify in plain text	**Y15**
Manufacturer's test certificate: M to DIN 55350, Part 18 and to ISO 9000	**C11**
Material Inspection Certificate Type 3.1 per EN 10204	**C12**
INMETRO[1)]	**E34**
Operating Instructions	
All literature is available to download for free, in a range of languages, at	
http://www.siemens.com/processinstrumentation/documentation.	
Accessories	**See page 4/69**

[1)] Available only with Approvals options B and D.

	Article No.
Accessories	
One metallic cable gland M20 x 1.5, -40 ... +80 °C (-40 ... +176 °F) with integrated shield connection (available for PROFIBUS PA)	**7ML1930-1AQ**
General Purpose	
½" NPT General Purpose Cable Entry IP68/IP69K NEMA 6, -40 ... +80 °C (-40 ... +176 °F), Dust Ignition Proof, cable size 6 ... 12 mm (0.236 ... 0.472 inch)	**7ML1830-1JA**
M20 x 1.5 General Purpose Cable Entry IP68/IP69K NEMA 6, -40 ... +80 °C (-40 ... +176 °F), Dust Ignition Proof, cable size 7 ... 12 mm (0.275 ... 0.472 inch)	**7ML1830-1JC**
Hazardous Locations	
½" NPT EMC rated Cable Gland: Dust Ignition Proof, Flameproof Exd, and Increased Safety ATEX II 2 GD ExtD A21 (Zone 1, Zone 2, Zone 21, Zone 22, and in Gas Groups IIA, IIB and IIC) -60 ... +80 °C IP66, IP67, IP68, NEMA4X, cable sizes 5.5 ... 12 mm (0.216 ... 0.472 inch)	**7ML1830-1JB**
M20 EMC rated Cable Gland: Dust Ignition Proof, Flameproof Exd, and Increased Safety ATEX II 2 GD ExtD A21 (Zone 1, Zone 2, Zone 21, Zone 22, and in Gas Groups IIA, IIB and IIC) -60 ... +80 °C IP66, IP67, IP68, NEMA4X, cable sizes 5.5 ... 12 mm (0.216 ... 0.472 inch)	**7ML1830-1JD**

Blind threaded flanges are available.
Customers interested in a custom designed device should consult a local sales person. For more information, please visit

http://www.automation.siemens.com/aspa_app.

© Siemens 2020

Selection and ordering data

	Article No.
Pointek Specials[1]	
CLS100 Polycarbonate Lid and Gasket, FKM	
Kit, lid and gasket, CLS100 enclosure version	**A5E01163671**
CLS100 Miscellaneous Parts	
Custom length of cable is available only for 7ML5501-xxx1x and 7ML5501-xxx5x[2]	
CLS200 Gasket (IP65), Synprene	
Spare gasket, enclosure version (IP65 versions only)	**A5E01163672**
CLS200 Gasket (IP68), Silicone	
Spare gasket, enclosure version (IP68 versions)	**A5E01163673**
CLS200/CLS300/LC300 Blind Lid	
Spare aluminum blind lid (for standard versions only)	**A5E01163674**
CLS200/CLS300 Lid with window	
Spare aluminum lid with window	**A5E01163676**
CLS200 Sensor Kit for cable units	
Kit, sensor for cable units, PPS, standard, FKM	**A5E01163677**
Kit, sensor for cable units, PPS, digital, FKM	**A5E01163678**
Kit, sensor for cable units, PPS, standard, FFKM	**A5E01163679**
Kit, sensor for cable units, PPS, digital, FFKM	**A5E01163680**
Kit, sensor for cable units, PVDF, standard, FKM	**A5E01163681**
Kit, sensor for cable units, PVDF, digital, FKM	**A5E01163682**
Kit, sensor for cable units, PVDF, standard, FFKM	**A5E01163683**
Kit, sensor for cable units, PVDF, digital, FFKM	**A5E01163684**
CLS200 Mounting Bracket, 316L stainless steel	
Spare mounting bracket, mounting hole 27 mm (1 inch)	**A5E01163685**
CLS200 PROFIBUS Connector (IP65)	
Spare, PROFIBUS connector (IP65 versions only)	**A5E01163686**
CLS200 Miscellaneous Parts	
CLS200 with FFKM O-rings (any version)[2]	
CLS200 Electronics	
Test magnet, digital version	**7ML1830-1JE**
Amplifier/power supply kit, standard version	**A5E03251681**
Amplifier/power supply, digital version	**7ML1830-1JF**
LCD display, digital version	**7ML1830-1JK**
CLS300 Cable Extensions, 316L stainless steel	
Kit, stainless steel cable extension, 1 m, adjustable by customer	**A5E01163688**
Kit, stainless steel cable extension, 3 m, adjustable by customer	**A5E01163689**
Kit, stainless steel cable extension, 5 m, adjustable by customer	**A5E01163690**
Kit, stainless steel cable extension, 10 m, adjustable by customer	**A5E01163691**
Kit, stainless steel cable extension, 15 m, adjustable by customer	**A5E01163693**
Kit, stainless steel cable extension, 20 m, adjustable by customer	**A5E01163695**
CLS300 Cable Extensions, 316 stainless steel with PFA coating	
Kit, PFA cable extension, 1 m, adjustable by customer	**A5E01163697**
Kit, PFA cable extension, 3 m, adjustable by customer	**A5E01163698**
Kit, PFA cable extension, 5 m, adjustable by customer	**A5E01163699**

	Article No.
Pointek Specials[1]	
Kit, PFA cable extension, 10 m, adjustable by customer	**A5E01163700**
Kit, PFA cable extension, 15 m, adjustable by customer	**A5E01163701**
Kit, PFA cable extension, 20 m, adjustable by customer	**A5E01163702**
CLS300 Rod Kits, 316L stainless steel	
Kit, stainless steel rod 180 mm (7.09 inch) to be used with CLS300 units only (with standard active shield). Insertion length after installation is 350 mm (13.78 inch).	**A5E01163719**
Kit, stainless steel rod 330 mm (12.99 inch) to be used with CLS300 units only (with standard active shield). Insertion length after installation is 500 mm (19.69 inch).	**A5E01163720**
Kit, stainless steel rod 580 mm (22.83 inch) to be used with CLS300 units only (with standard active shield). Insertion length after installation is 750 mm (29.53 inch).	**A5E01163721**
Kit, stainless steel rod 830 mm (32.68 inch) to be used with CLS300 units only (with standard active shield). Insertion length after installation is 1 000 mm (39.37 inch).	**A5E01163722**
Kit, stainless steel rod 1330 mm (52.36 inch) to be used with CLS300 units only (with standard active shield). Insertion length after installation is 1 500 mm (59.06 inch).[2]	
Kit, stainless steel rod 1830 mm (72.05 inch) to be used with CLS300 units only (with standard active shield). Insertion length after installation is 2 000 mm (78.74 inch).[2]	
Kit, stainless steel rod customized length up to 1 m[2]	
Kit, stainless steel rod customized length up to 2 m[2]	
CLS300 Electronics Kits with drivers (for rod or cable versions)	
Kit, electronics with driver, standard CLS300. To be used in cable versions with length greater than 5 m.[3][4]	**A5E01163723**
Kit, electronics with driver, digital CLS300. To be used in cable versions with length greater than 5 m.[3][4]	**A5E01163725**
CLS300 Electronics Kits with drivers (for cable versions)	
Kit, electronics with driver, standard CLS300. To be used in cable versions with length greater than 5 m.[3][4]	**A5E01163724**
Kit, electronics with driver, digital CLS300. To be used in cable versions with length greater than 5 m.[3][4]	**A5E01163726**
CLS300 Electronics	
Test magnet, digital version	**7ML1830-1JE**
Amplifier/power supply kit, standard version	**A5E03251683**
Amplifier/power supply, digital version	**7ML1830-1JF**
LCD display, digital version	**7ML1830-1JK**
CLS300 Weight Kit, 316L stainless steel	
Kit, spare stainless steel weight. To be used in any cable version of CLS300.	**A5E01163727**

1) Special flange sizes and facings are available. Please consult a local sales person for details.
2) Please consult a local sales person for part number and pricing
3) For General Purpose approvals only
4) To maintain approvals, qualified trained Siemens personnel required for part replacement
5) Customers interested in a custom designed device should consult a local sales person. For more information, please visit http://www.automation.siemens.com/aspa_app.

© Siemens 2020

Characteristic curves

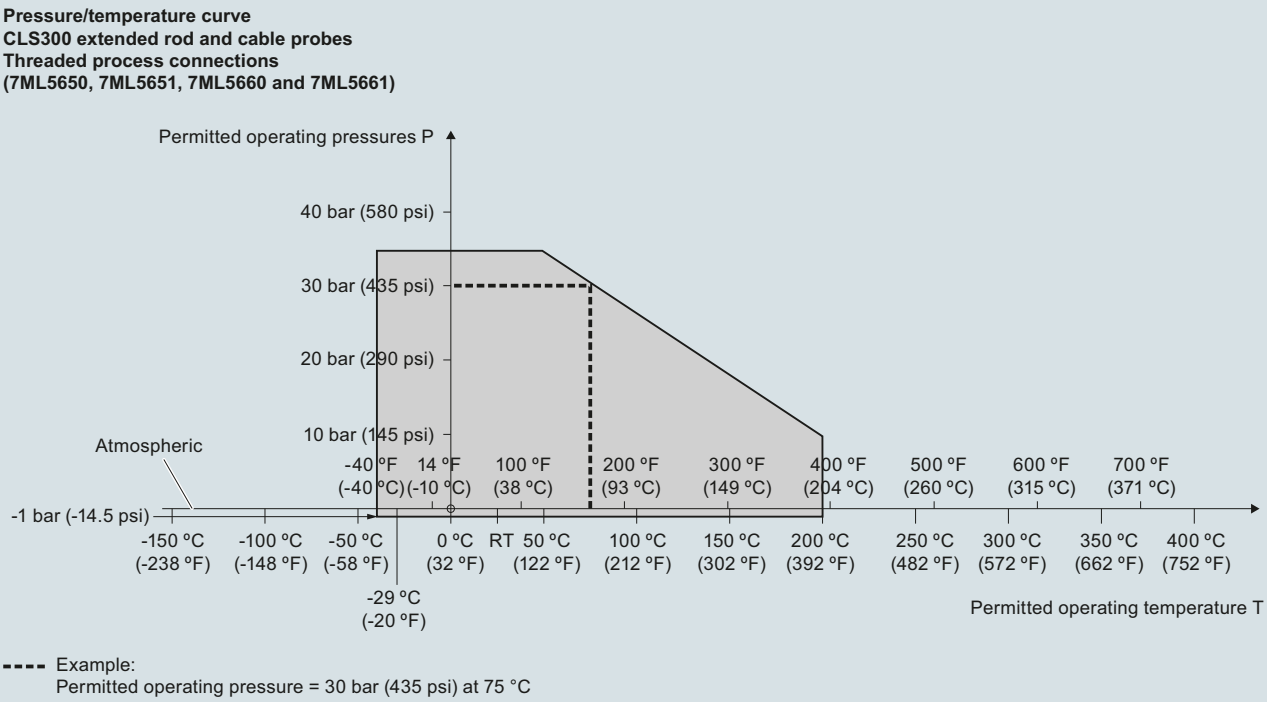

Pointek CLS300 process pressure/temperature derating curves (7ML5650, 7ML5651, 7ML5660 and 7ML5661)

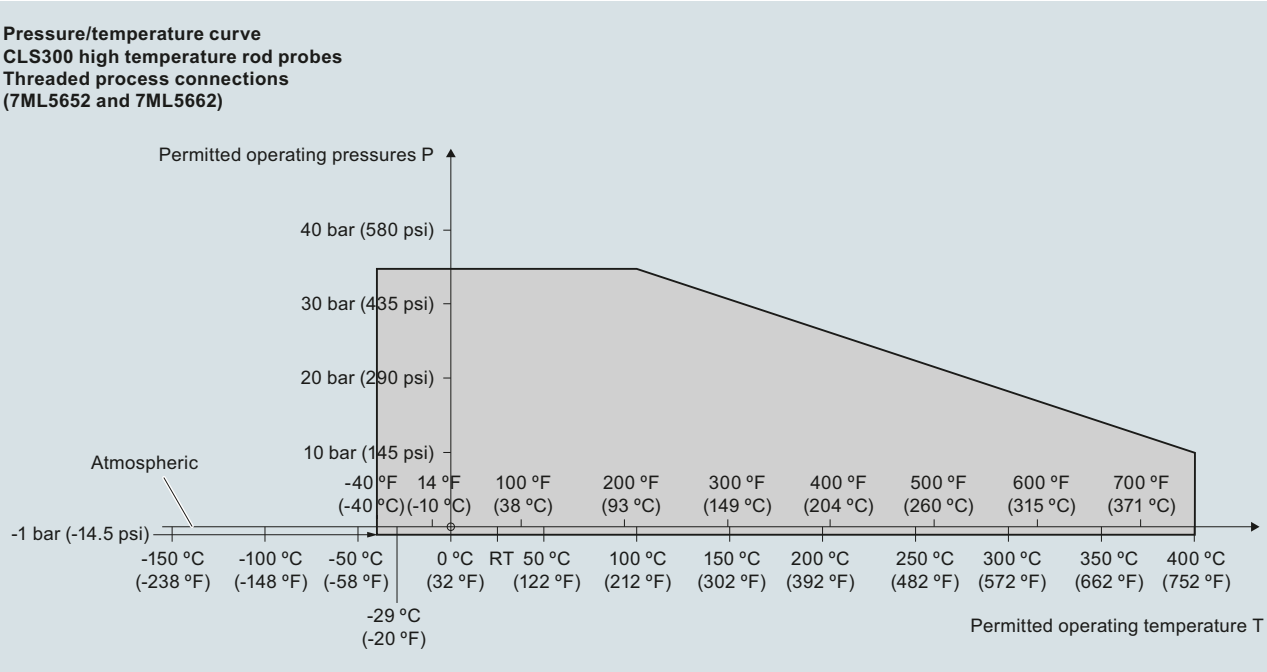

Pointek CLS300 process pressure/temperature derating curves (7ML5652 and 7ML5662)

© Siemens 2020

Characteristic curves (continued)

Pressure/temperature curve
CLS300 extended rod and cable probes
ASME flanged process connections
(7ML5650, 7ML5651, 7ML5660 and 7ML5661)

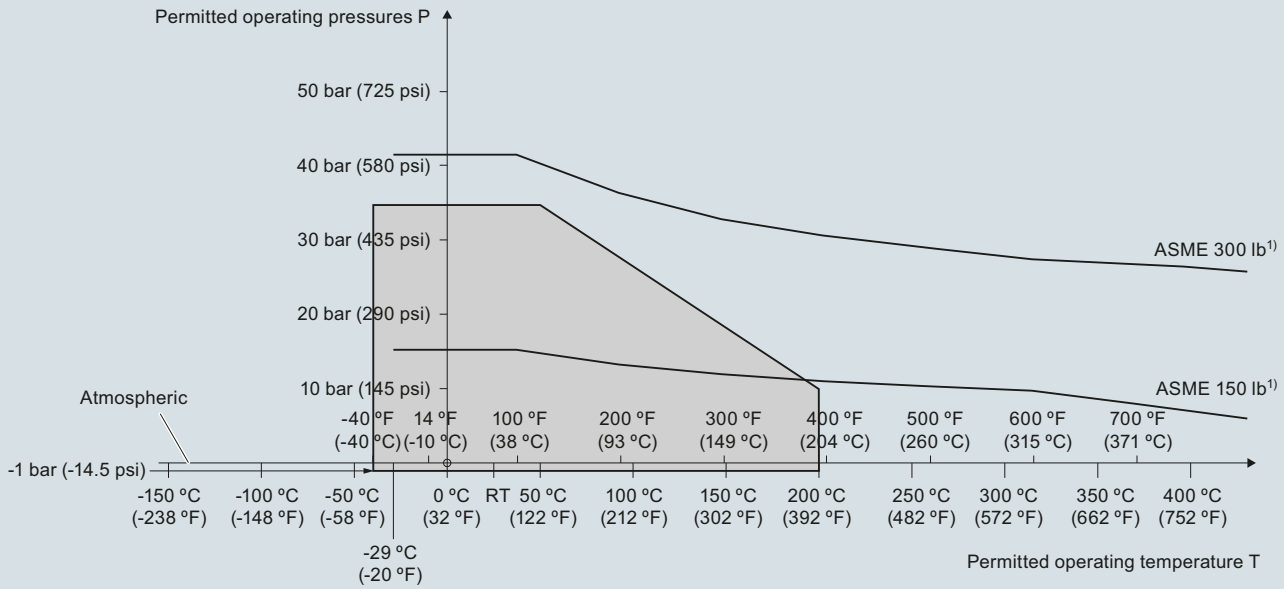

1) The curve denotes the minimum allowable flange class for the shaded area below.

Pointek CLS300 process pressure/temperature derating curves (7ML5650, 7ML5651, 7ML5660, and 7ML5661)

© Siemens 2020

Characteristic curves (continued)

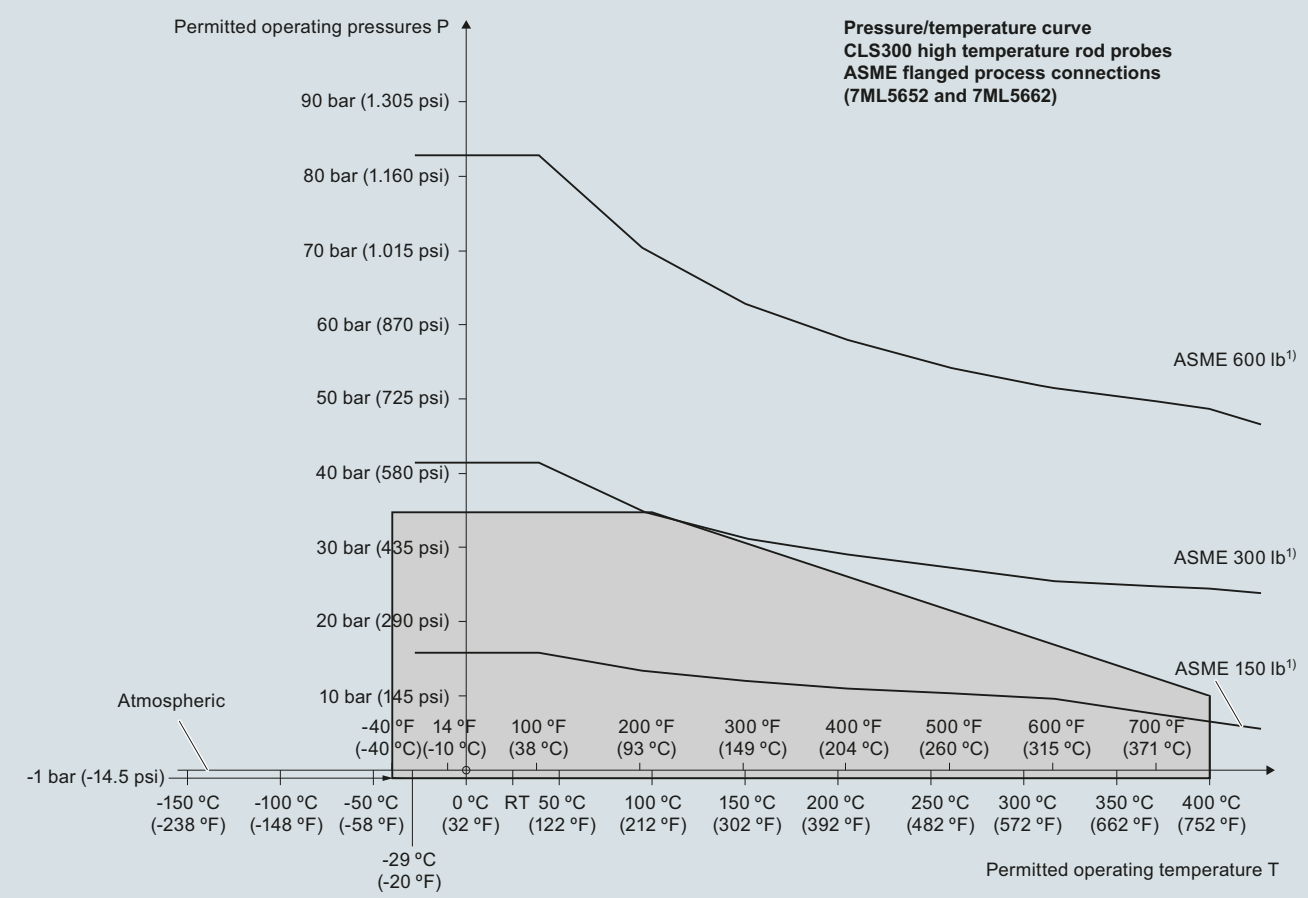

1) The curve denotes the minimum allowable flange class for the shaded area below.

Pointek CLS300 process pressure/temperature derating curves (7ML5652 and 7ML5662)

© Siemens 2020

Characteristic curves (continued)

Pressure/temperature curve
CLS300 extended rod and cable probes
EN flanged process connections
(7ML5650, 7ML5651, 7ML5660 and 7ML5661)

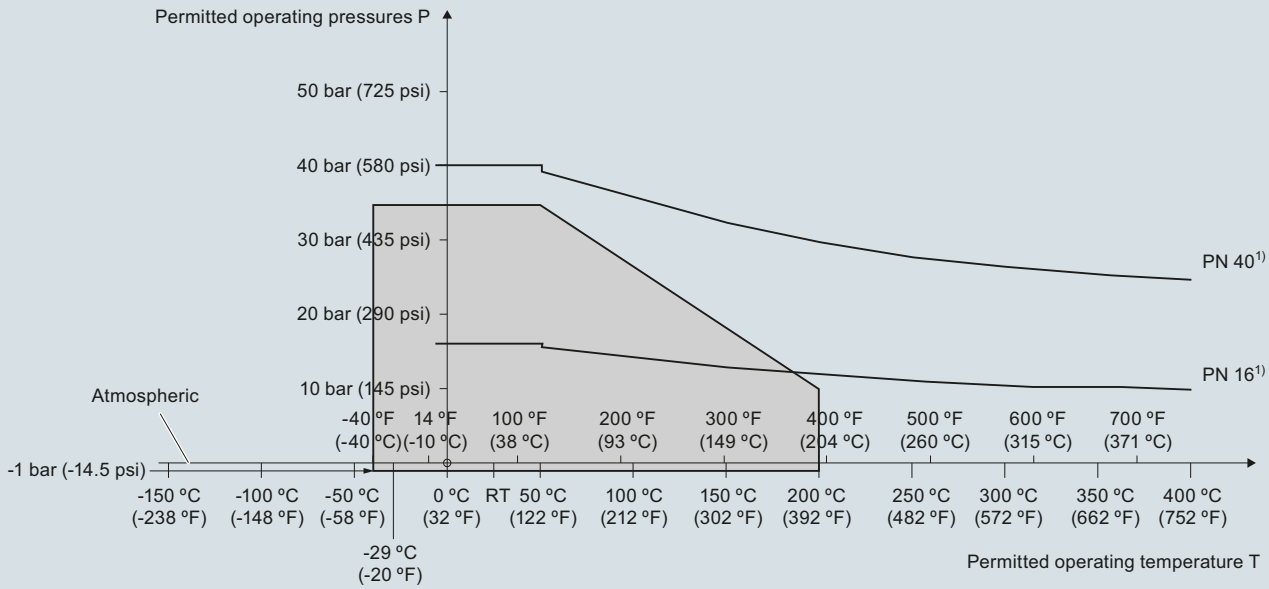

[1)] The curve denotes the minimum allowable flange class for the shaded area below.

Pointek CLS300 process pressure/temperature derating curves (7ML5650, 7ML5651, 7ML5660 and 7ML5661)

Pressure/Temperature Curve
CLS300 High Temperature Rod Probes
EN Flanged Process Connections (7ML5652 and 7ML5662)

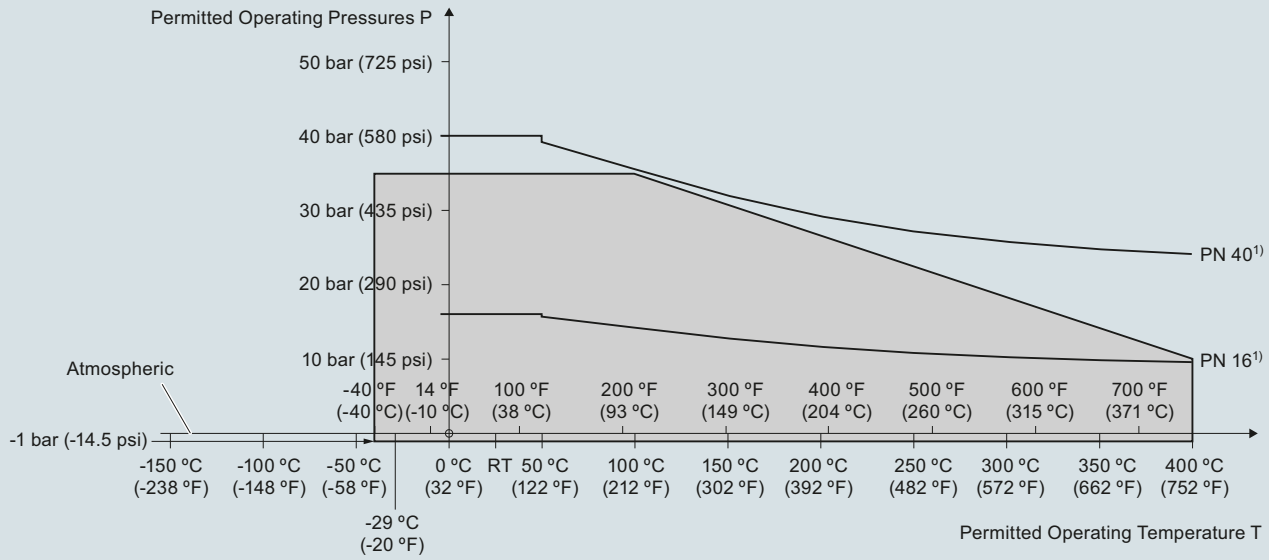

[1)] The curve denotes the minimum allowable flange class for the shaded area below.

Pointek CLS300 process pressure/temperature derating curves (7ML5652 and 7ML5662)

© Siemens 2020

Dimensional drawings

Rod version
Threaded (7ML5650 and 7ML5660)

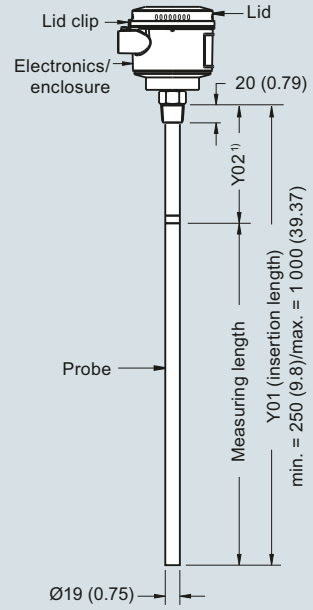

High temperature rod version
Threaded (7ML5652 and 7ML5662)

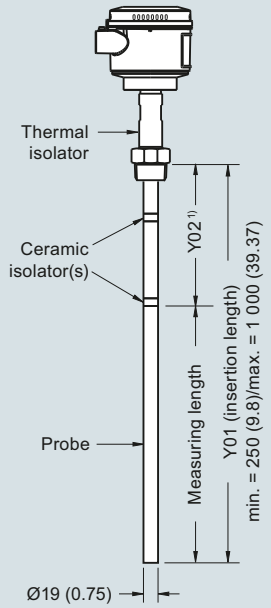

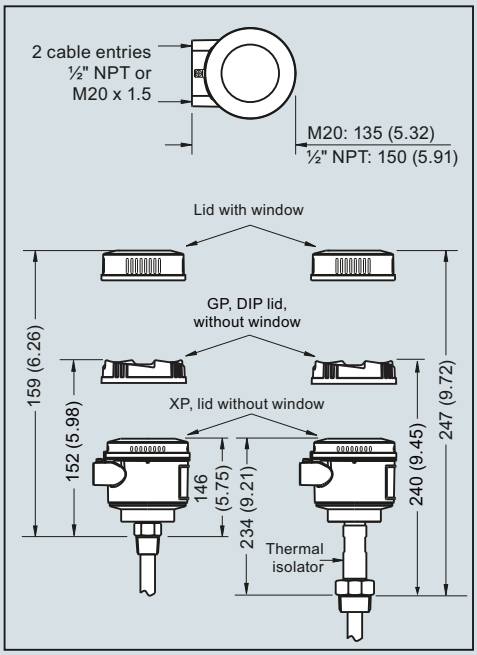

Cable version, non-insulated
Threaded (7ML5651 and 7ML5661)

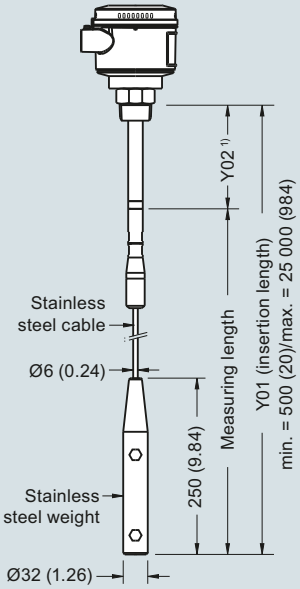

Cable version, insulated
Threaded (7ML5651 and 7ML5661)

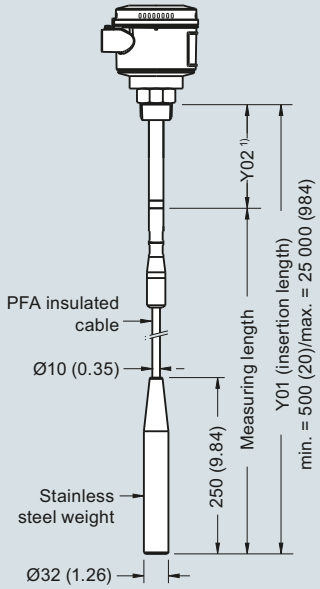

Note:

1) Extended Active Shield (Y02): standard length 125 (4.92). Optional active shield lengths: 250 (9.84) or 400 (15.75).

Pointek CLS300 threaded process connections, dimensions in mm (inch)

© Siemens 2020

Dimensional drawings (continued)

Rod version
Welded flange (7ML5650 and 7ML5660)

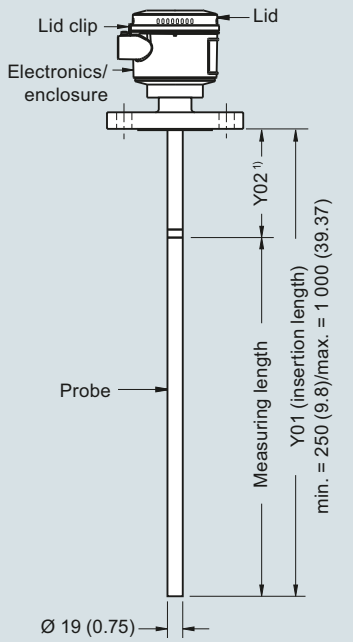

High temperature rod version
Welded flange
(7ML5652 and 7ML5662)

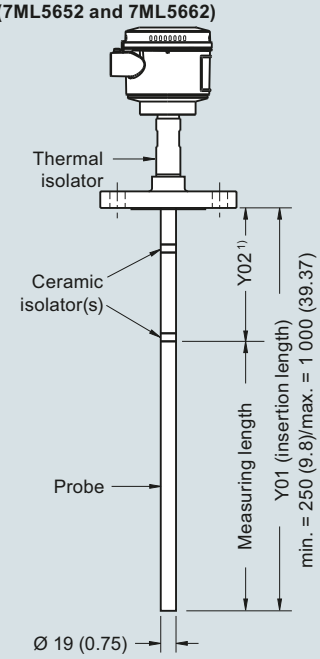

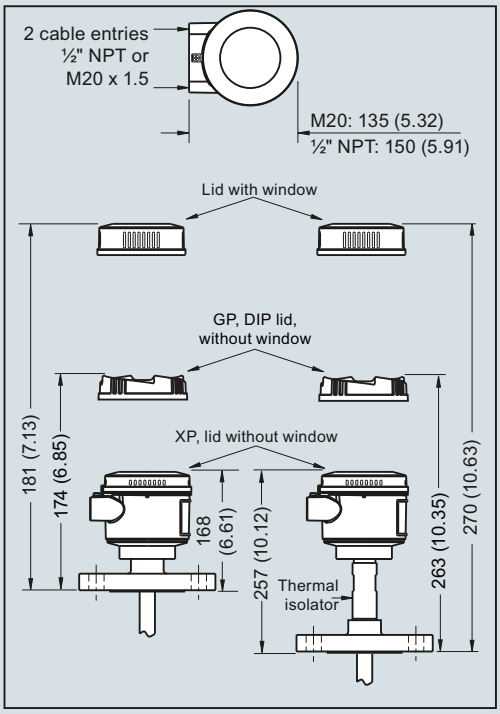

Cable version, non-insulated
Welded flange (7ML5651 and 7ML5661)

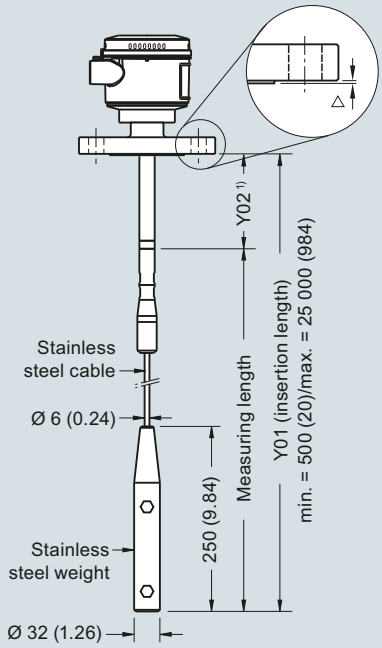

Cable version, insulated
Welded flange (7ML5651 and 7ML5661)

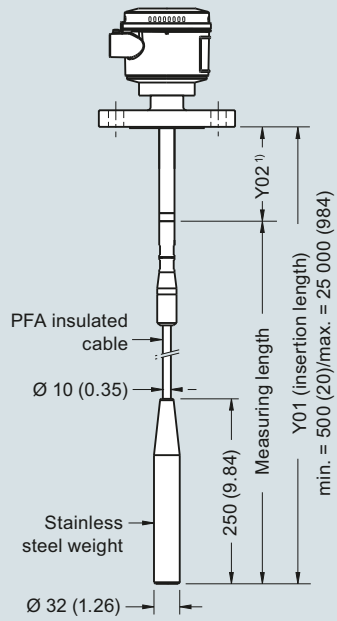

Flange Facing (raised face)	
Flange Class	**Facing thickness**
△ ASME 150/300	2 (0.08)
△ ASME 600/900	7 (0.28)
△ PN16/40	2 (0.08)

Note:

1) Extended Active Shield (Y02): standard length 105 (4.13). Optional active shield lengths: 230 (9.06) or 380 (14.96).
Insertion length does not include any raised face/gasket face dimension (see Flange Facing Table above)

Pointek CLS300 flanged process connections, dimensions in mm (inch)

© Siemens 2020

Circuit diagrams

Wiring: Pointek CLS300 standard

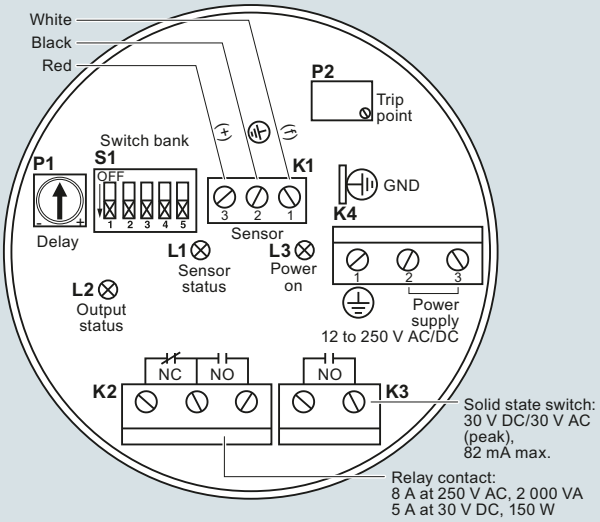

Notes:
- Identification label is on underside of lid. Switch and potentiometer settings are for illustration purposes only (refer to operation/setup in manual).
- All field wiring must have insulation suitable for at least 250 V.
- Relay contact terminals are for use with equipment having no accessible live parts and wiring having insulation suitable for at least 250 V.
- Maximum working voltage between adjacent relay contacts shall be 250 V.
- Refer to the Instruction manual or contact Siemens representative for detailed wiring information.

Wiring: Pointek CLS300 digital

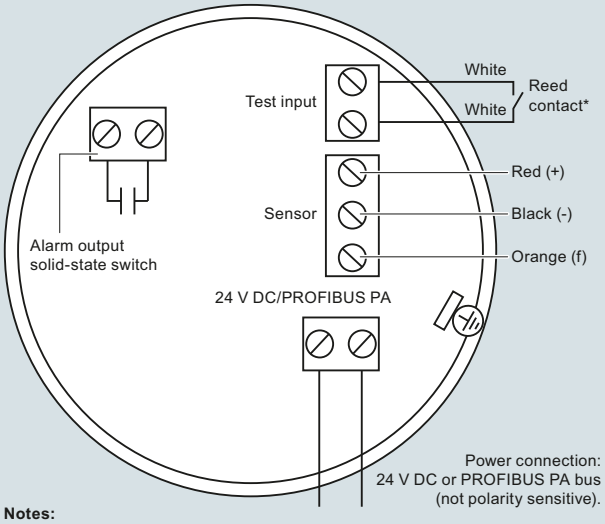

Notes:
Refer to the instruction manual or contact a Siemens representative for detailed wiring information.

***Magnet activated sensor test**
A magnet can be used to test the sensor without opening the lid of the Pointek CLS300 digital version. Bring the magnet close to the test area indicated on the enclosure. The sensor test starts and finishes automatically after 10 seconds.

Pointek CLS300 connections

© Siemens 2020

Overview

SITRANS LVL100 is a compact vibrating level switch for material detection in liquid and slurry applications such as overflow, high, low and demand applications, as well as pump protection. It is ideal for use in confined spaces.

Benefits

- Proven vibrating level switch technology for liquids
- Compact insertion length of 40 mm (1.57 inch) for confined space applications
- Available starting at 1/2" threaded process connections
- Fault monitoring for corrosion, loss of vibration, or line break to the piezo drive
- Integrated test function to confirm correct operation

Application

SITRANS LVL100 is a compact level switch designed for industrial use in all areas of process technology and can be used for material detection with liquids and slurries. With an insertion length of only 40 mm (1.57 inch), SITRANS LVL100 can be mounted in small pipes and confined space applications. It is virtually unaffected by the chemical and physical properties of the liquid. The LVL100 can be used in difficult conditions including turbulence, air bubbles, foam generation, buildup, or external vibration.

The tuning fork is piezoelectrically energized and vibrates at a mechanical resonance frequency of approximately 1 200 Hz. The vibration frequency changes when the tuning fork is covered by the medium. This change is detected by the integrated oscillator and converted into a switching command. The integrated electronics evaluate the level signal and output a switching signal to connected devices.

- Key Applications: for use in liquids and slurries, for level measurement, overfill, and dry run protection

Configuration

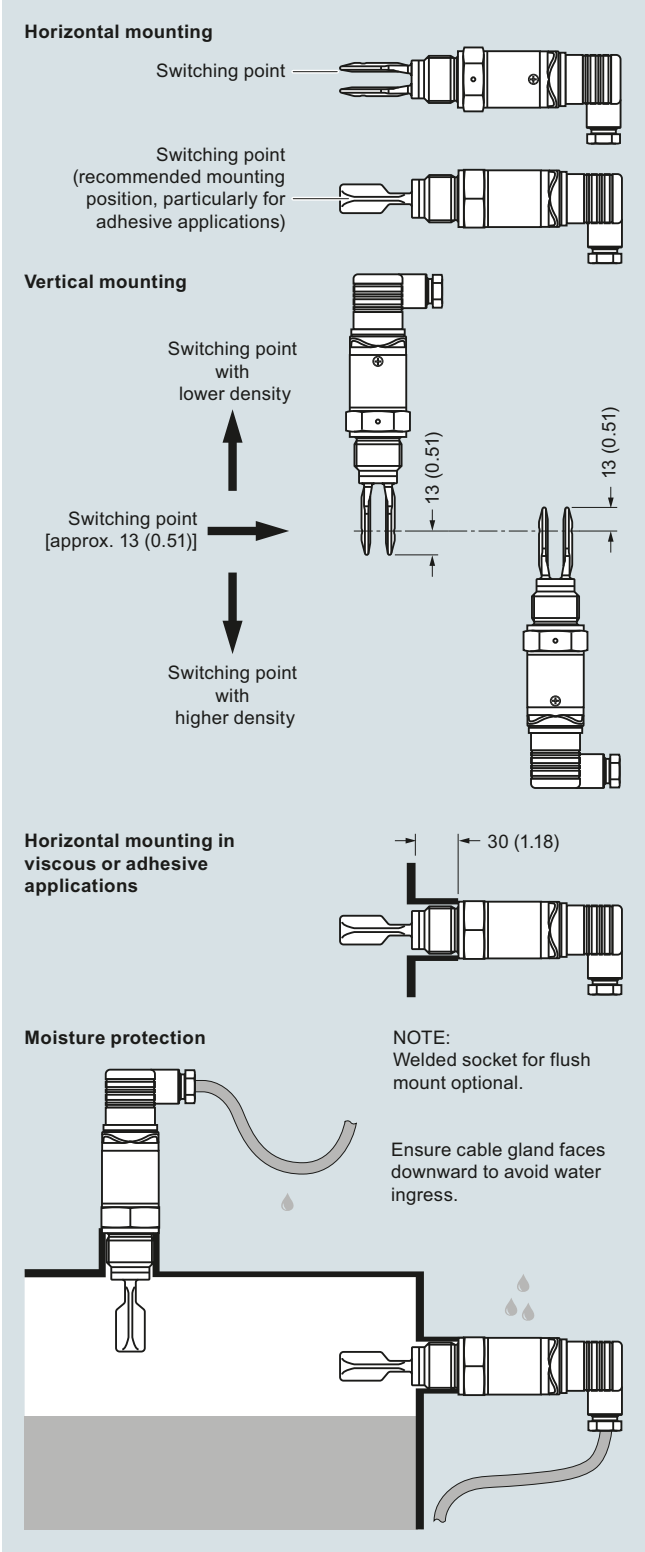

SITRANS LVL100 installation, dimensions in mm (inch)

© Siemens 2020

Technical specifications

Mode of operation	
Measuring principle	Vibrating point level switch
Input	
Measured variable	High and low and demand
Output	
Output options	• Contactless electronic switch • Transistor output PNP
Measuring accuracy	
Hysteresis	Approx. 2 mm (0.08 inch) with vertical installation
Switching delay	Approx. 500 ms (on/off)
Frequency	Approx. 1 100 Hz
Rated operating conditions	
Installation conditions	
• Location	Indoor/outdoor
Ambient conditions	
• Ambient temperature	-40 ... +70 °C (-40 ... +158 °F)
• Storage temperature	-40 … +80 °C (-40 … +176 °F)
• Installation category	III
• Pollution degree	2
Medium conditions	
• Temperature	
- Standard	-40 ... +100 °C (-40 ... +212 °F)
- High temperature option	-40 ... +150 °C (-40 ... +302 °F)
• Pressure (vessel)	-1 ... 64 bar g (-14.5 ... 928 psi g)
• Density	0.7 ... 2.5 g/cm³ (0.025 ... 0.09 lb/in³)
Design	
Material	
• Enclosure	316L and Plastic PEI
• Tuning fork	316L (1.4404 or 1.4435)
• Process connection (threaded)	316L (1.4404 or 1.4435)
• Process seal	Klingersil C-4400
Process connection	
• Pipe thread, cylindrical (ISO 228 T1)	G ½" A, G ¾" A, or G 1" A
• Pipe thread, tapered	½" NPT, ¾" NPT, or 1" NPT
• Hygienic fittings	Bolting DN 40 PN 40
	Tri-clamp 1", 1½", 2" PN 10
Degree of protection	IP65/Type 4/NEMA 4 (with DIN 43650 valve plug), IP66/67 or IP68 (with M12 connector)
Conduit entry	1 x M12 [IP66/IP67 or IP68 (0.2 bar)]
Weight (housing)	250 g (9 oz)
Power supply	
Supply voltage	20 ... 253 V AC, 50/60 Hz 20 ... 253 V DC
Power consumption	Max. 0.5 W
Certificates and approvals	• Overfill protection (WHG) • Shipping approvals

© Siemens 2020

Selection and ordering data

	Article No.
SITRANS LVL100 Vibrating point level switch. ↗	**7ML5745-**
Detects level and material in liquids and slurries. Compact, with 40 mm (1.6 inch) insertion.	■ ■ ■ ■ ■ - ■ ■ **A 0**
↗ Click on the Article No. for the online configuration in the PIA Life Cycle Portal.	
Approvals	
Without approvals	**1**
Shipping approvals[5]	**2**
Overfill protection (WHG)[1]	**3**
Canada/US for Ex-free area (including Ordinary Location Approval)[7]	**4**
Process temperature	
Standard -40 ... +100 °C (-40 ... +212 °F)[2]	**A**
Extended -40 ... +150 °C (-40 ... +302 °F)[2][6]	**B**
Hygienic applications -40 ... +150 °C (-40 ... +302 °F)[3]	**C**
Process connection	
Thread G¾" A PN 64/316L	**A 0**
Thread G¾" A PN 64/316L Ra < 0.8 µm	**A 1**
Thread ¾" NPT PN 64/316L	**A 2**
Thread ¾" NPT PN 64/316L Ra < 0.8 µm	**A 3**
Thread G1" A PN 64/316L	**A 4**
Thread G1" A PN 64/316L Ra < 0.8 µm	**A 5**
Thread 1" NPT PN 64/316L	**A 6**
Thread 1" NPT PN 64/316L Ra < 0.8 µm	**A 7**
Tri-Clamp 1" PN 16 DIN 32676/316L Ra < 0.8 µm	**A 8**
Tri-Clamp 1½" PN 16 DIN 32676/316L Ra < 0.8 µm	**B 0**
Tri-Clamp 2" PN 16 DIN 32676/316L Ra < 0.8 µm	**B 1**
Bolting DN 25 PN 40 DIN 11851/316L Ra < 0.8 µm	**B 2**
Bolting DN 40 PN 40 DIN 11851/316L Ra < 0.8 µm	**B 3**
Bolting DN 50 PN 25 DIN 11851/316L Ra < 0.8 µm	**B 4**
SMS DN 38 PN 6 316L Ra < 0.8 µm	**B 5**
Hygienic fitting with compression nut F40 PN 25/316L Ra < 0.8 µm	**B 6**
Thread G½" (DIN 3852-A) PN 64/316L	**C 0**
Thread G½" (DIN 3852-A) PN 64/316L Ra < 0.8 µm	**C 1**
Thread ½" NPT (ASME B1.20.1) PN 64/316L	**C 2**
Thread ½" NPT (ASME B1.20.1) PN 64/316L Ra < 0.8 µm	**C 3**
Thread R¾" PN 64, EN 10226-1/316L	**D 0**
R1 Thread R1 PN 64, EN 10226-1/316L	**D 1**
RF Thread R1 PN 64, EN 10226-1/316L (Ra < 0.8 µm)	**D 2**
Electronics	
Contactless electronic switch 20 ... 250 V AC/DC[4]	**1**
Transistor output PNP 10 ... 35 V DC	**2**
Housing	
316L	**1**
Electrical connection/Protection	
M12 x 1/IP67	**A**
According to ISO4400 including plug/IP65	**B**
According to DIN 43650 incl. plug with QuickOn connection/IP65	**C**
M12 x 1 incl. 5 m cable/IP68 (0.2 bar)	**D**

	Order code
Further designs	
Please add "**-Z**" to Article No. and specify Order code(s).	
Cleaning including certificate (oil, grease and silicone free)	**W01**
Identification Label, foil laser marking	**Y16**
Acceptance test Certificate 2.2 for material EN 10204	**C15**
3.1-Inspection Certificate for instrument with test data (EN 10204)	**C25**
Operating Instructions	
All literature is available to download for free, in a range of languages, at	
http://www.siemens.com/processinstrumentation/documentation.	

Spare Parts	Article No.
LVL100 Threaded Welded Socket	
G¾" A/316L with FKM Seal	**7ML1930-1EE**
G1" A/316L with FKM Seal	**7ML1930-1EF**
M27 x 1.5/316L with FKM Seal	**7ML1930-1EG**
G¾" A/316L with EPDM Seal	**7ML1930-1EH**
G1" A/316L with EPDM Seal	**7ML1930-1EJ**
M27 x 1.5/316L with EPDM Seal	**7ML1930-1EK**

[1] Available only with Electronics option 2.
[2] Available only with Process connection options A0, A2, A4, A6, C0, C2, D0, and D1.
[3] Available only with Process connection options A1, A3, A5, and A7 ... B6, C1, C3, and D2.
[4] Available only with Electrical connection/Protection options B and C.
[5] Available only with Process temperature options A and B.
[6] Available only with Shipping approval options DNV and GL.
[7] Available only with Electrical connection/Protection option B.

© Siemens 2020

Characteristic curves

Ambient temperature to process temperature dependency (standard version)

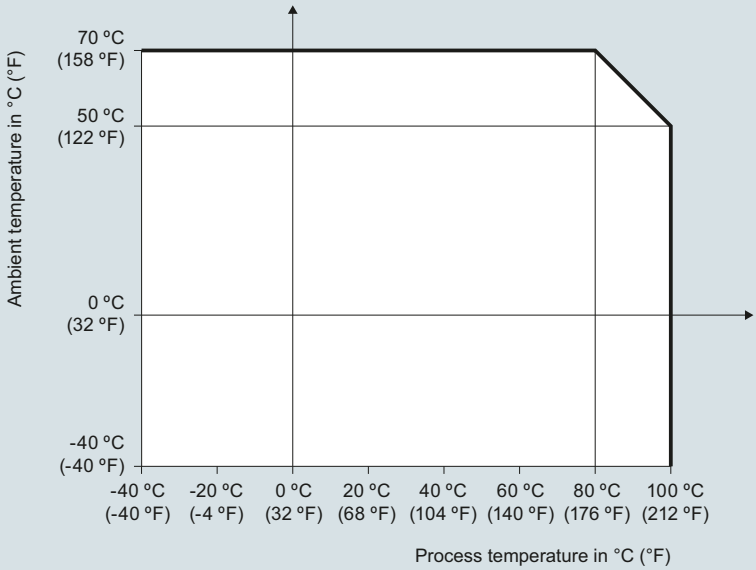

Ambient temperature to process temperature dependency (high temperature version)

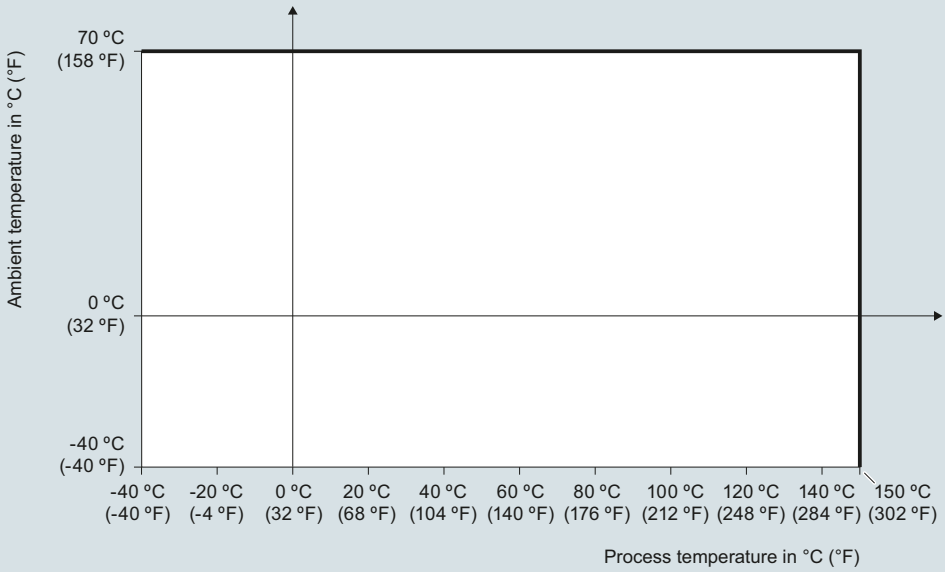

SITRANS LVL100 ambient temperature/process temperature derating curves

© Siemens 2020

Dimensional drawings

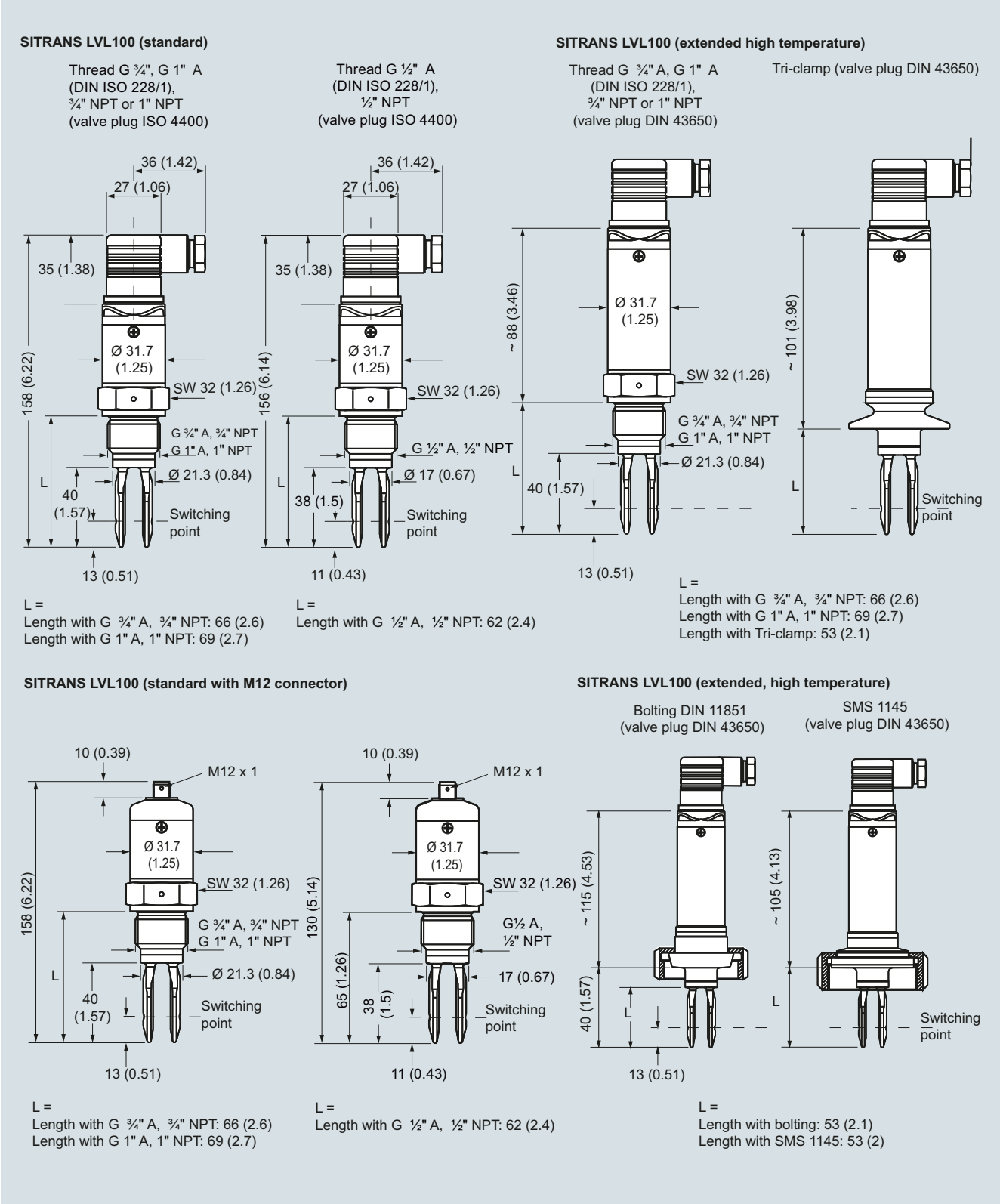

SITRANS LVL100, dimensions in mm (inch)

© Siemens 2020

Options

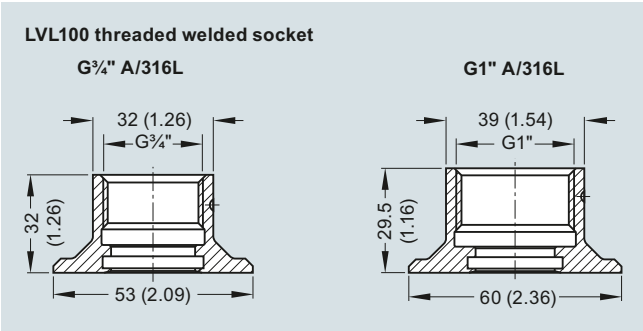

SITRANS LVL100 welded socket, dimensions in mm (inch)

© Siemens 2020

Circuit diagrams

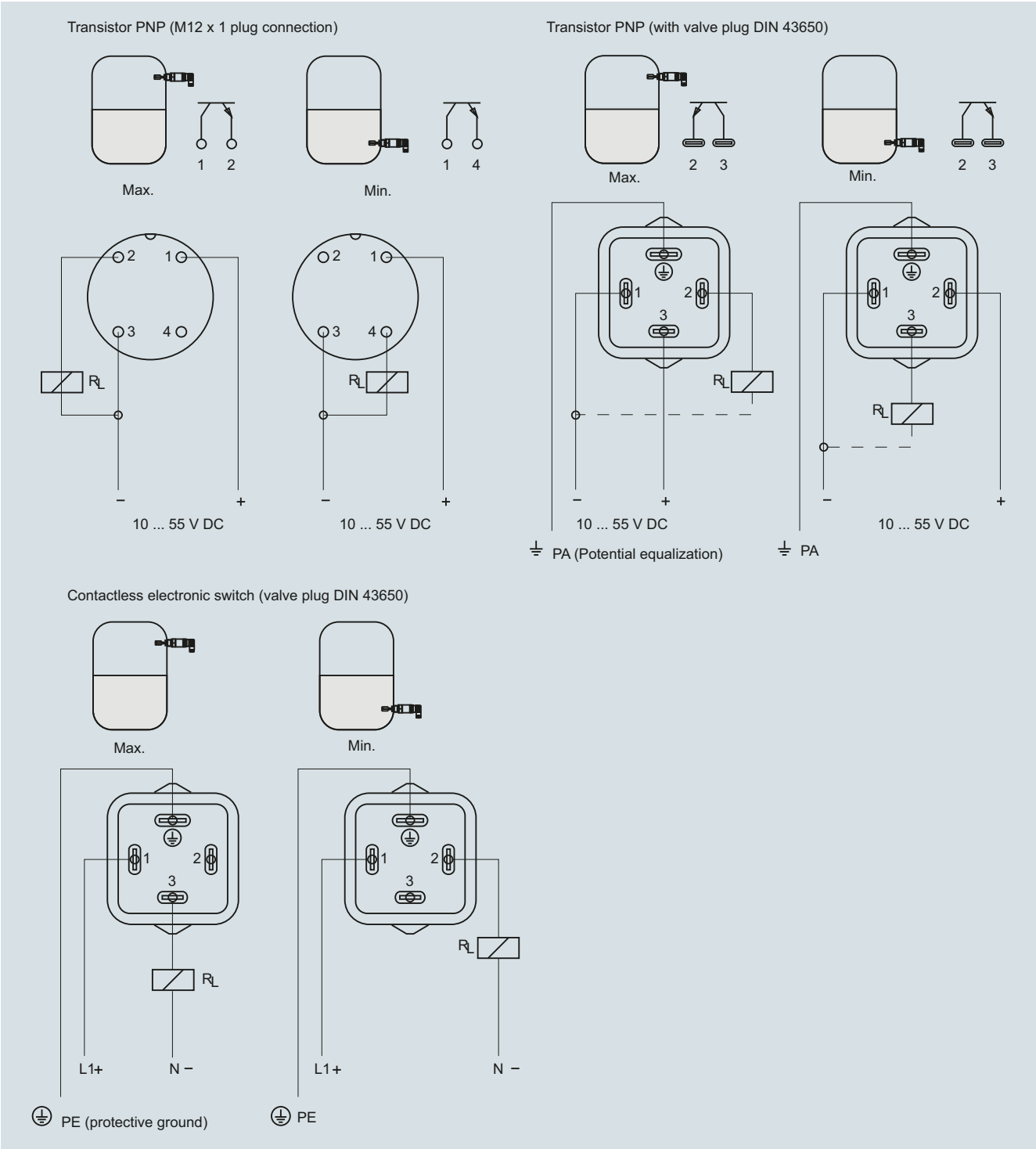

SITRANS LVL100 connections

© Siemens 2020

Overview

SITRANS LVL200 is a standard vibrating level switch for material detection in liquid and slurry applications such as overflow, high, low, and demand applications, as well as pump protection. For use in SIL-2 applications.

Benefits

- Proven vibrating level switch technology for liquids
- Compact insertion length of 40 mm (1.57 inch) for confined space applications
- Fault monitoring for corrosion, loss of vibration or line break to the piezo drive
- Functional Safety (SIL 2). Device suitable for use in accordance with IEC 61508 and IEC 61511
- Hygienic process connections
- Suitable for API 2350
- Optional remote test signal conditioner

Application

SITRANS LVL200 is a level switch designed for industrial use in all areas of process technology and can be used with liquids and slurries. With a tuning fork insertion length of only 40 mm (1.57 inch), SITRANS LVL200 can be mounted in small pipes and applications with confined space. The LVL200 can be used to measure products with a minimum density of > 0.5 g/cm³ (0.018 lb/in³). The LVL200 can be used in difficult conditions including turbulence, air bubbles, foam generation, buildup, or external vibration.

SITRANS LVL200 continuously monitors faults via frequency evaluation, providing early detection of strong corrosion or damage on the tuning fork, loss of vibration, or a line break to the piezo drive.

The tuning fork is piezoelectrically energized and vibrates at its mechanical resonance frequency of approximately 1 200 Hz. The vibration frequency changes when the tuning fork is covered by the medium. This change is detected by the integrated oscillator and converted into a switching command. The integrated electronics evaluate the level signal and output a switching signal, directly operating connected devices.

The optional signal conditioner provides a remote test feature to ensure continuous product reliability.

- Key Applications: for use in liquids and slurries, for level measurement, overfill, and dry run protection

Configuration

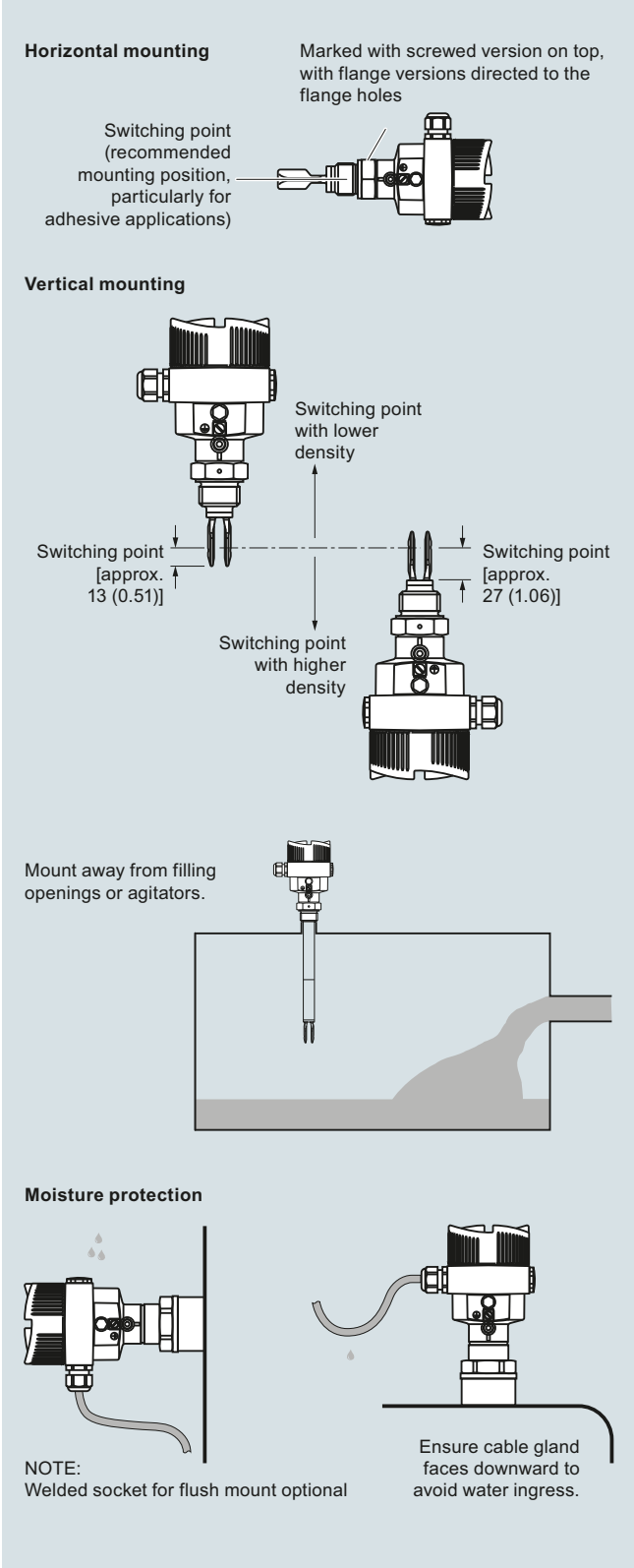

SITRANS LVL200 installation, dimensions in mm (inch)

© Siemens 2020

Technical specifications

Mode of operation	
Measuring principle	Vibrating point level switch
Input	
Measured variable	High and low and demand (via mode switch)
Output	
Output options	• Relay output (DPDT), 2 floating SPDTs • Contactless electronic switch • 2-wire Namur signal output • Transistor (NPN/PNP) 10 ... 55 V DC • 8/16 mA
Measuring accuracy	
Repeatability	0.1 mm (0.004 inch)
Hysteresis	Approx. 2 mm (0.08 inch) with vertical installation
Switching delay	• Standard, Extended: approx. 500 ms (on/off) • High temperature: approx. 1 s (optionally adjustable at factory)
Frequency	• Standard, Extended: Approx. 1 200 Hz • High temperature: 1400 Hz
Rated operating conditions	
Installation conditions	
• Location	Indoor/outdoor
Ambient conditions	
• Ambient temperature	-40 ... +70 °C (-40 ... +158 °F)
• Storage temperature	-40 … +80 °C (-40 … +176 °F)
• Installation category	III
• Pollution degree	2
Medium conditions	
• Temperature	
- LVL200S Standard	-50 ... +150 °C (-58 ... +302 °F)
- LVL200S High temperature option	-50 ... +250 °C (-58 ... +482 °F)
- LVL200E Standard: with 316L/ Alloy C22	-50 ... +150 °C (-58 ... +302 °F)
- LVL200E High temperature option with 316L/Alloy C22	-50 ... +250 °C (-58 ... +482 °F)
- LVL200H High temperature	-196 … +450 °C (-321 … +842 °F)
Pressure (vessel)	• Standard, Extended: -1 ... 64 bar g (-14.5 ... 928 psi g) • High temperature: instrument version up to 160 bar (2 320 psi g): -1 … 160 bar/-100 … 16 000 kPa (-14.5 … 2 320 psi g) Note: The process pressure is dependent on configuration, including process fitting, e.g. flange
Density	0.7 ... 2.5 g/cm³ (0.025 ... 0.09 lb/in³); 0.5 ... 2.5 g/cm³ (0.018 ... 0.09 lb/in³) by switching over Density optionally starts at 0.47 cm³ (0.017 lb/in³)

Design	
Material	
• Enclosure	• Aluminum die-cast AlSi10Mg, powder-coated, basis: Polyester • Stainless steel housing, electropolished 316L • Stainless steel housing, precision casting 316L • Plastic housing, plastic PBT (Polyester)
• Tuning fork	316L (1.4404 or 1.4435), Alloy C22
• Extension tube [ø 21.3 mm (0.839 inch)]	316L (1.4404 or 1.4435), Alloy C22
• Process connection: threaded	• Standard, Extended: 316L (1.4404 or 1.4435), Alloy C22 • High temperature: Inconel 718
• Process connection: flange	316L (1.4404 or 1.4435), 316L with Alloy C22, ECTFE, or PFA coating
• Process seal	Klingersil C-4400
Process connection	
• Pipe thread, cylindrical (ISO 228 T1)	G ¾" A, G 1" A
• Pipe thread, tapered	¾" NPT, 1" NPT, 1½" NPT
• Flanges	DIN from DN 25, ASME from 1"
• Hygienic fittings	Bolting DN 40 PN 40, 1, 1½, 2, 2½" Tri-Clamp PN 10, conus DN 25 PN 40, Tuchenhagen Varivent DN 50 PN 10, SMS
Degree of protection	Type 4X/NEMA 4X/IP66/IP67
Conduit entry	• 1 x M20 x 1.5 (cable: ø 5 ... 9 mm), 1 x blind stopper M20 x 1.5; attached 1 x M20 x 1.5 cable entry • 1 x ½" NPT cable entry, 1 x blind stopper ½" NPT, 1 x ½" NPT cable entry • 1x M12 x 1; 1 x blind stopper M20 x 1.5
Weight	
• Device weight (dependent on process fitting)	Approx. 0.8 ... 4 kg (0.18 ... 8.82 lb)
• Tube extension (extended version)	Approx. 920 g/m (10 oz/ft)
Power supply	
Supply voltage	
• Relay DPDT	20 ... 253 V AC, 50/60 Hz, 20 ... 72 V DC
• Contactless	20 ... 253 V AC, 50/60 Hz, 20 ... 253 V DC
• 2-wire NAMUR	
Operating voltage (characteristics according to standard) for connection to an amplifier according to NAMUR	IEC 60947-5-6, approx. 8.2 V Off-load voltage U_o approx. 8.2 V Short-circuit current I_U approx. 8.2 mA
Operating voltage 8/16 mA (via the signal conditioning instrument)	
• Non-Ex instrument	12 … 36 V DC
• Ex-d instrument (ATEX, FM, CSA)	12 … 36 V DC
• Ex-ia instrument (ATEX)	12 … 29 V DC
• Ex-ia instrument (FM, CSA)	12 … 31 V DC

© Siemens 2020

Technical specifications (continued)

Power consumption	• Standard, Extended: 1 ... 8 VA (AC), approx. 1.3 W (DC) • High temperature: 3 VA (AC), 1 W (DC)
• Relay DPDT	1 ... 8 VA (AC), approx. 1.3 W (DC)
• Contactless	Domestic current requirement approx. 3 mA (via load circuit) Load current • Min. 10 mA • Max. 400 mA [with I > 300 mA the ambient temperature can be max. 60 °C (140 °F)] • Max. 4 A up to 40 ms (not WHG specified)
• 8/16 mA, two-wire output	Output signal • Empty (uncovered) - 8 mA • Full (covered) - 16 mA • Fault message - < 1.8 mA Possible signal conditioning instruments: SITRANS SCSC, SITRANS TCSC
• 2-wire Namur	Current consumption • Falling characteristics ≥ 2.6 mA uncovered/≤ 0.6 mA covered • ≤ 0.6 mA uncovered/≥ 2.6 mA covered • Failure message ≤ 0.6 mA
• Transistor (NPN/PNP) 10 ... 55 V DC	Output • Floating transistor output, permanently shortcircuit-proof Load current • < 400 mA Voltage loss • < 1 V Switching voltage • < 55 V DC Blocking current • < 10 µA
Certificates and approvals	• CE, CSA • Overfill Protection WHG and VLAREM II • FM (Non-Incendive) Class I, Div. 2, Groups A, B, C, D • FM (Explosion-Proof) Class I, Div. 1, Groups A, B, C, D; (Dust Ignition-Proof) Class II, III, Div. 1, Groups E, F, G1 • IECEx d IIC T6 ... T2 Ga/Gb EHEDG • ATEX II 1/2G, 2G EEx d IIC T6 • ATEX II 1G, 1/2G, 2G EEx ia IIC T6 • Shipping approvals • BR-Ex d IIC T6 ... T2 • FDA, 3A, EHEDG • SIL/IEC61508 Declaration of Conformity [SIL-2 (min/max detection)] Please see configuration section below for full list of approvals.

© Siemens 2020

Selection and ordering data

	Article No.
SITRANS LVL200 Vibrating point level switch, standard design ↗	**7ML5746-** ■ ■ ■ ■ ■ - ■ ■ A 0 ■ ■ ■
Detects level and material in liquids and slurries. Short insertion. For hazardous applications.	
↗ Click on the Article No. for the online configuration in the PIA Life Cycle Portal.	
Electronics	
Contactless electronic switch 20 ... 250 V AC/DC[1)9)24)]	1
Double relay (DPDT) 20 ... 72 V DC/20 ... 250 V AC[24)]	2
NAMUR signal[9)]	4
Transistor (NPN/PNP) 10 ... 55 V DC[1)25)]	5
Two-wire (8/16 mA) 12 ... 36 V DC[27)]	6
Approvals	
Without approvals	A
Overfill protection (WHG)[9)]	B
ATEX II 1G, ½G, 2G Ex ia IIC T6[6)]	W
ATEX II 1G, ½G, 2G Ex ia IIC T6 + WHG[6)9)]	C
ATEX II ½G, 2G Ex d IIC T6 + WHG[5)15)]	D
ATEX II 1G, ½G, 2G Ex ia IIC T6 + shipping approvals[6)16)]	E
ATEX II ½G, 2G Ex d IIC T6 + shipping approvals[5)15)]	F
ATEX II 1G, ½G, 2G Ex ia IIC T6 + ATEX II ½D IP6X T[6)7)17)]	G
IECEx Ex ia IIC T6[6)18)]	H
Shipping approvals[16)]	K
ATEX II 3G Ex nA II T5 ... T1 X[14)19)]	L
FM (IS) Class I, II, III, Div. 1, Groups A, B, C, D, E, F, G[6)20)]	N
FM (XP) Class I, Div. 1, Groups A, B, C, D; (DIP) Class II, III, Div. 1, Groups E, F, G[2)5)10)]	P
FM (NI) Class I, Div. 2, Groups A, B, C, D[21)]	Q
IECEx d IIC T6 ... T2 Ga/Gb[5)15)]	R
CSA (XP) Class I, II, III Div. 1, Groups A, B, C, D, E, F, G[5)15)]	S
CSA (NI) Class I, II, III, Div. 2, Groups A, B, C, D, E, F, G[22)]	T
BR-Ex d IIC T6 ... T2[5)23)]	U
CSA (IS) Class I, II, III Div. 1, Groups A, B, C, D, E, F, G[6)9)]	V
ATEX II ½D, 2D ExtD A20/21, A21 IP6 T...[19)26)]	X
GOST-R/EAC + ATEX II 1G, ½G, 2G Ex ia IIC T6 + WHG[9)26)]	Z J 1 A
GOST-R/EAC + ATEX II ½G, Ex d IIC T2 ... T6 + WHG[5)15)28)]	Z J 1 B
GOST-R/EAC + ATEX II ½G, Ex d IIC T2 ... T6 + Ship approval[5)15)28)]	Z J 1 C
GOST-R/EAC + ATEX II 1G, ½G, 2G Ex ia IIC T6 + II ½D, 2D ExtD[7)17)28)]	Z J 1 D
GOST-R/EAC + ATEX II ½D, 2D ExtD A20/21, A21 IP6 T...[17)26)]	Z J 1 E
Process connection	
Thread G¾" A, PN 64/316L	A 0 0
Thread G¾" A, PN 64/316L Ra < 0.8 µm	A 0 1
Thread ¾" NPT, PN 64/316L	A 0 2
Thread ¾" NPT, PN 64/316L Ra < 0.8 µm	A 0 3
Thread ¾" NPT, PN 64/Alloy 400 (2.4360)	A 0 4
Thread G¾" A, PN 64/Alloy C22 (2.4602)	A 0 5
Thread ¾" NPT, PN 64/Alloy C22 (2.4602)	A 0 6
Thread G1" A, PN 64/316L	A 0 7
Thread G1" A, PN 64/316L ECTFE coated MB1982[4)]	A 0 8
Thread G1" A, PN 64/316L PFA coated[4)]	A 1 0
Thread G1" A, PN 64/Alloy 400 (2.4360)	A 1 1
Thread G1" A, PN 64/316L Ra < 0.8 µm	A 1 2
Thread 1" NPT, PN 64/316L	A 1 3
Thread 1" NPT, PN 64/316L ECTFE coated MB1982[4)]	A 1 4

	Article No.
SITRANS LVL200 Vibrating point level switch, standard design	**7ML5746-** ■ ■ ■ ■ ■ - ■ ■ A 0 ■ ■ ■
Detects level and material in liquids and slurries. Short insertion. For hazardous applications.	
Thread 1" NPT, PN 64/316L PFA-coated[4)]	A 1 5
Thread 1" NPT, PN 64/Alloy 400 (2.4360)	A 1 6
Thread 1" NPT, PN 64/316L Ra < 0.8 µm	A 1 7
Thread G1" A, PN 64/Alloy C22 (2.4602)	A 1 8
Thread G1" A, PN 64/Alloy C22 (2.4602) Ra < 0.3 µm	A 2 0
Thread G1½" A, PN 64/316L	A 2 1
Thread G1½" A, PN 64/316L Ra < 0.8 µm	A 2 2
Thread G1½" A, PN 64/Alloy C22 (2.4602)	A 2 3
Thread 1" NPT, PN 64/Alloy C22 (2.4602)	A 2 4
Thread 1½" NPT, PN 64/316L	A 2 5
Thread 1½" NPT, PN 64/316L Ra < 0.8 µm	A 2 6
Thread 1½" NPT, PN 64/Alloy C22 (2.4602)	A 2 7
Thread G2" A, PN 64/316L	A 2 8
Thread M27 x 1.5, PN 64/316L	A 3 0
Conus DN 25, PN 40/316L Ra < 0.3 µm	A 3 1
Conus DN 25, PN 40/316L Ra < 0.8 µm	A 3 2
Conus DN 25, PN 40/ECTFE (ZB3033)[4)]	A 3 3
Conus M52, PN 40/316L	A 3 4
Conus M52, PN 40/316L Ra < 0.3 µm	A 3 5
Conus M52, PN 40/316L Ra < 0.8 µm	A 3 6
Tri-Clamp 1", PN 16/316L Ra < 0.3 µm	A 3 7
Tri-Clamp 1", PN 16/Alloy C22 (2.4602)	A 3 8
Tri-Clamp 1", PN 16/316L Ra < 0.8 µm	A 4 0
Tri-Clamp 1½", PN 16/316L Ra < 0.3 µm	A 4 1
Tri-Clamp 1½", PN 16/Alloy C22 (2.4602)	A 4 2
Tri-Clamp 1½", PN 16/316L Ra < 0.8 µm	A 4 3
Tri-Clamp 2", PN 16/316L Ra < 0.3 µm	A 4 4
Tri-Clamp 2", PN 16/Alloy C22 (2.4602)	A 4 5
Tri-Clamp 2", PN 16/316L Ra < 0.8 µm	A 4 6
Tri-Clamp 2½", PN 10/316L Ra < 0.3 µm	A 4 7
Tri-Clamp 2½", PN 10/316L Ra < 0.8 µm	A 4 8
Tri-Clamp 3", PN 10/316L Ra < 0.3 µm	A 5 0
Tri-Clamp 3", PN 10/316L Ra < 0.8 µm	A 5 1
Bolting DN 32, PN 40 DIN11851/316L Ra < 0.3 µm	A 5 2
Bolting DN 32, PN 40 DIN11851/316L Ra < 0.8 µm	A 5 3
Bolting DN 25, PN 40 DIN11851/316L Ra < 0.3 µm	A 5 4
Bolting DN 25, PN 40 DIN11851/316L Ra < 0.8 µm	A 5 5
Bolting DN 40, PN 40 DIN11851/316L Ra < 0.3 µm	A 5 6
Bolting DN 40, PN 40 DIN11851/316L Ra < 0.8 µm	A 5 7
Bolting DN 40, PN 40 DIN11864-1 A/316L Ra < 0.8 µm ZB3052	A 5 8
Bolting DN 50, PN 25 DIN11851/316L Ra < 0.3 µm	A 6 0
Bolting DN 50, PN 25 DIN11851/316L Ra < 0.8 µm	A 6 1
Bolting DN 50, PN 25 DIN11864-1 A/316L Ra < 0.8 µm ZB3052	A 6 2
Hygienic w. compr. nut F40, PN 25/316L	A 6 3
Hygienic w. compr. nut F40, PN 25/316L Ra < 0.3 µm	A 6 4
Hygienic w. compr. nut F40, PN 25/316L Ra < 0.8 µm	A 6 5
Varivent N50-40/316L Ra < 0.3 µm	A 6 6
Varivent N50-40/316L Ra < 0.8 µm	A 6 7
Varivent N125/100/316L Ra < 0.8 µm	A 6 8
DRD flange, PN 40/316L ZB3007	A 7 0
SMS DN 38/316L Ra < 0.8 µm[4)]	A 7 1
SMS DN 51, PN 6/316L Ra < 0.8 µm[4)]	A 7 2
Swagelok VCR screwing ZG2579, PN 64/316L	A 7 3
Neumo biocontrol size 25, PN 16/316L Ra < 0.8 µm	A 7 4

© Siemens 2020

Selection and ordering data

	Article No.
SITRANS LVL200 Vibrating point level switch, standard design Detects level and material in liquids and slurries. Short insertion. For hazardous applications.	**7ML5746-** ■■■■■ - ■■ **A 0** ■■■
Neumo biocontrol size 50, PN 16/316L Ra < 0.8 µm[4]	**A 7 5**
Neumo biocontrol size 65, PN 16/316L Ra < 0.8 µm	**A 7 6**
Neumo biocontrol size 80, PN 16/316L Ra < 0.8 µm	**A 7 7**
SÜDMO DN 50, PN 10/316L Ra < 0.8 µm	**A 7 8**
Small flange DN 25, PN 1.5 DIN 28403/316L pol. Ra < 0.8 µm	**A 8 0**
Small flange DN 40, PN 1.5 DIN 28403/316L pol. Ra < 0.8 µm	**A 8 1**
Ingold connection, PN16/316L a < 0.8 µm (acc. to MB2523)	**A 8 2**
Ingold connection, PN 16/Alloy C22 (2.4602) Ra < 0.8 µm (acc. to MB6017)	**A 8 3**
Terminal DN 33.7 PN 40 DIN 11864-3-A-/316L BN2 Ra < 0.8 µm[4]	**A 8 4**
Hygienic fl. DN 50 PN 16 DIN 11864-2-A-/316L Ra < 0.8 µm	**A 8 5**
Flange DN 25, PN 6 Form C, DIN 2501/316L	**A 8 6**
Flange DN 25, PN 6 Form C, DIN 2501/PFA[4]	**A 8 7**
Flange DN 25, PN 40 Form C, DIN 2501/316L	**A 8 8**
Flange DN 25, PN 40 Form C, DIN 2501/Alloy C22 (2.4602)	**B 0 0**
Flange DN 25, PN 40 Form C, DIN 2501/ECTFE[4]	**B 0 1**
Flange DN 25, PN 40 Form C, DIN 2501/PFA[4]	**B 0 2**
Flange DN 25, PN 40 Form C, DIN 2501/Enamelled	**B 0 3**
Flange DN 25, PN 40 Form D, DIN 2501/316L	**B 0 4**
Flange DN 25, PN 40 Form F, DIN 2501/316L	**B 0 5**
Flange DN 25, PN 40 Form N, DIN 2501/316L	**B 0 6**
Flange DN 25, PN 40 Form N, DIN 2501/Alloy C22 (2.4602)	**B 0 7**
Flange DN 25, PN 40 Form N, DIN 2501/Alloy 400 (2.4360) solid	**B 0 8**
Flange DN 25, PN 40 V13, DIN 2501/316L	**B 1 0**
Flange DN 32, PN 40 Form C, DIN 2501/316L	**B 1 1**
Flange DN 32, PN 40 Form C, DIN 2501/ECTFE[4]	**B 1 2**
Flange DN 40, PN 6 Form C, DIN 2501/316L	**B 1 3**
Flange DN 40, PN 6 Form C, DIN 2501/ECTFE[4]	**B 1 4**
Flange DN 40, PN 40 Form C, DIN 2501/316L	**B 1 5**
Flange DN 40, PN 40 Form C, DIN 2501/Alloy C22 (2.4602)	**B 1 6**
Flange DN 40, PN 40 Form C, DIN 2501/ECTFE[4]	**B 1 7**
Flange DN 40, PN 40 Form C, DIN 2501/PFA[4]	**B 1 8**
Flange DN 40, PN 40 Form C, DIN 2501/Enamelled[3]	**B 2 0**
Flange DN 40, PN 40 Form F, DIN 2501/316L	**B 2 1**
Flange DN 40, PN 40 Form N, DIN 2501/316L	**B 2 2**
Flange DN 40, PN 40 Form E, DIN 2501/316L	**B 2 3**
Flange DN 40, PN 40 V13, DIN 2501/316L	**B 2 4**
Flange DN 50, PN 40 Form C, DIN 2501/316L	**B 2 5**
Flange DN 50, PN 40 Form C, DIN 2501/Alloy C22 (2.4602)	**B 2 6**
Flange DN 50, PN 40 Form C, DIN 2501/ECTFE[4]	**B 2 7**
Flange DN 50, PN 40 Form C, DIN 2501/ECTFE (ZB3108)[4]	**B 2 8**

	Article No.
SITRANS LVL200 Vibrating point level switch, standard design Detects level and material in liquids and slurries. Short insertion. For hazardous applications.	**7ML5746-** ■■■■■ - ■■ **A 0** ■■■
Flange DN 50, PN 40 Form C, DIN 2501/PFA[4]	**B 3 0**
Flange DN 50, PN 40 Form D, DIN 2501/316L	**B 3 1**
Flange DN 50, PN 40 Form D, DIN 2501/Alloy C22 (2.4602)	**B 3 2**
Flange DN 50, PN 40 Form F, DIN 2501/316L	**B 3 3**
Flange DN 50, PN 40 Form N, DIN 2501/316L	**B 3 4**
Flange DN 50, PN 40 Form N, DIN 2501/Alloy C22 (2.4602)	**B 3 5**
Flange DN 50, PN 40 Form E, DIN 2501/316L	**B 3 6**
Flange DN 50, PN 40 V13, DIN 2501/316L	**B 3 7**
Flange DN 50, PN 40 R13, DIN 2501/316L	**B 3 8**
Flange DN 50, PN 64 Form F, DIN 2501/316L	**B 4 0**
Flange DN 50, PN 64 Form N, DIN 2501/Alloy C22 (2.4602)	**B 4 1**
Flange DN 50, PN 64 Form C, DIN 2501/316L	**B 4 2**
Flange DN 50, PN 64 Form L, DIN 2501/316L	**B 4 3**
Flange DN 50, PN 100 Form E, DIN 2501/316L	**B 4 4**
Flange DN 50, PN 100 Form L, DIN 2501/316L	**B 4 5**
Flange DN 65, PN 40 Form C, DIN 2501/316L	**B 4 6**
Flange DN 65, PN 40 Form C, DIN 2501/Alloy C22 (2.4602)	**B 4 7**
Flange DN 65, PN 40 Form C, DIN 2501/ECTFE[4]	**B 4 8**
Flange DN 65, PN 40 Form C, DIN 2501/PFA[4]	**B 5 0**
Flange DN 65, PN 40 Form F, DIN 2501/316L	**B 5 1**
Flange DN 65, PN 64 Form E, DIN 2501/316L	**B 5 2**
Flange DN 80, PN 40 Form C, DIN 2501/316L	**B 5 3**
Flange DN 80, PN 40 Form C, DIN 2501/Alloy C22 (2.4602)	**B 5 4**
Flange DN 80, PN 40 Form C, DIN 2501/ECTFE[4]	**B 5 5**
Flange DN 80, PN 40 Form C, DIN 2501/PFA[4]	**B 5 6**
Flange DN 80, PN 40 Form C, DIN 2501/Enamelled[3]	**B 5 7**
Flange DN 80, PN 40 Form F, DIN 2501/316L	**B 5 8**
Flange DN 80, PN 40 Form N, DIN 2501/316L	**B 6 0**
Flange DN 100, PN 16 Form C, DIN 2501/316L	**B 6 2**
Flange DN 100, PN 16 Form C, DIN 2501/Alloy C22 (2.4602)	**B 6 3**
Flange DN 100, PN 16 Form C, DIN 2501/ECTFE[4]	**B 6 4**
Flange DN 100, PN 16 Form C, DIN 2501/PFA[4]	**B 6 5**
Flange DN 100, PN 16 Form C, DIN 2501/Enamelled[3]	**B 6 6**
Flange DN 100, PN 16 Form D, DIN 2501/316L	**B 6 7**
Flange DN 100, PN 16 Form F, DIN 2501/316L	**B 6 8**
Flange DN 100, PN 16 Form N, DIN 2501/316L	**B 7 0**
Flange DN 100, PN 40 Form C, DIN 2501/316L	**B 7 1**
Flange DN 100, PN 40 Form C, DIN 2501/ECTFE[4]	**B 7 2**
Flange DN 100, PN 40 Form C, DIN 2501/PFA[4]	**B 7 3**

© Siemens 2020

Selection and ordering data

	Article No.
SITRANS LVL200 Vibrating point level switch, standard design Detects level and material in liquids and slurries. Short insertion. For hazardous applications.	**7ML5746-** ■■■■■ - ■■ **A 0** ■■■
Flange DN 100, PN 40 Form C, DIN 2501/Enamelled[3]	**B 7 4**
Flange DN 100, PN 40 Form F, DIN 2501/316L	**B 7 5**
Flange DN 100, PN 40 Form N, DIN 2501/316L	**B 7 6**
Flange DN 100, PN 40 V13, DIN 2501/316L	**B 7 7**
Flange DN 100, PN 64 Form E, DIN 2501/316L	**B 7 8**
Flange DN 100, PN 100 Form E, DIN 2501/316L	**B 8 0**
Flange DN 100, PN 100 Form L, DIN 2501/316L	**B 8 1**
Flange DN 125, PN 16 Form F, DIN 2501/316L	**B 8 2**
Flange DN 125, PN 40 Form C, DIN 2501/316L	**B 8 3**
Flange DN 125, PN 40 Form N, DIN 2512/ 316L	**B 8 4**
Flange DN 150, PN 16 Form C, DIN 2501/316L	**B 8 5**
Flange DN 150, PN 16 Form C, DIN 2501/Alloy C22 (2.4602)	**B 8 6**
Flange DN 150, PN 16 Form C, DIN 2501/ECTFE[4]	**B 8 7**
Flange DN 150, PN 16 Form C, DIN 2501/PFA[4]	**B 8 8**
Flange DN 150, PN 16 Form D, DIN 2501/316L	**C 0 0**
Flange DN 150, PN 40 Form C, DIN 2501/316L	**C 0 1**
Flange DN 150, PN 40 Form C, DIN 2501/Alloy C22 (2.4602)	**C 0 2**
Flange DN 150, PN 40 Form F, DIN 2501/316L	**C 0 3**
Flange DN 150, PN 40 Form N, DIN 2512/316L	**C 0 4**
Flange DN 200, PN 10 Form C, DIN 2501/ECTFE[4]	**C 0 5**
Flange DN 200, PN 16 Form C, DIN 2501/316L	**C 0 6**
Flange DN 25, PN 40 Form B1, EN 1092-1/316L	**C 0 7**
Flange DN 25, PN 40 Form B1, EN 1092-1/Alloy C22 (2.4602)	**C 0 8**
Flange DN 25, PN 40 Form B1, EN/316L/PFA[4]	**C 1 0**
Flange DN 25, PN 40 Form B1, EN 1092-1/Enamelled[3]	**C 1 1**
Flange DN 25, PN 40 Form B2, EN 1092-1/316L	**C 1 2**
Flange DN 25, PN 40 Form F, EN 1092-1/316L	**C 1 3**
Flange DN 25, PN 63 Form B1, EN 1092-1/316L	**C 1 4**
Flange DN 25, PN 100 Form B2, EN 1092-1/316L	**C 1 5**
Flange DN 40, PN 40 Form B1, EN/316L	**C 1 6**
Flange DN 40, PN 40 Form B1, EN 1092-1/PFA[4]	**C 1 7**
Flange DN 40, PN 40 Form B2, EN/316L	**C 1 8**
Flange DN 50, PN 40 Form B1, EN/316L	**C 2 0**
Flange DN 50, PN 40 Form B1, EN 1092-1/Alloy C22 (2.4602)	**C 2 1**
Flange DN 50, PN 40 Form B1, EN 1092-1/Alloy 400 (2.4360) ZB2977	**C 2 2**
Flange DN 50, PN 40 Form B1, EN 1092-1/ECTFE[4]	**C 2 3**
Flange DN 50, PN 40 Form B1, EN/316L/PFA[4]	**C 2 4**
Flange DN 50, PN 40 Form B1, EN 1092-1/Enamelled[3]	**C 2 5**

	Article No.
SITRANS LVL200 Vibrating point level switch, standard design Detects level and material in liquids and slurries. Short insertion. For hazardous applications.	**7ML5746-** ■■■■■ - ■■ **A 0** ■■■
Flange DN 50, PN 40 Form C, EN 1092-1/316L	**C 2 6**
Flange DN 50, PN 40 Form D, EN/316L	**C 2 7**
Flange DN 50, PN 40 Form D, EN 1092-1/Alloy C22 (2.4602)	**C 2 8**
Flange DN 50, PN 40 Form B2, EN 1092-1/316L	**C 3 0**
Flange DN 50, PN 40 Form E, EN 1092-1/316L	**C 3 1**
Flange DN 80, PN 40 Form B1, EN 1092-1/316L	**C 3 2**
Flange DN 80, PN 40 Form B1, EN 1092-1/Alloy C22 (2.4602)	**C 3 3**
Flange DN 80, PN 40 Form B1, EN 1092-1/ECTFE[4]	**C 3 4**
Flange DN 80, PN 40 Form B1, EN 1092-1/Enamelled[3]	**C 3 5**
Flange DN 80, PN 40 Form B2, EN 1092-1/316L	**C 3 6**
Flange DN 100, PN 16 Form B1, EN 1092-1/316L	**C 3 7**
Flange DN 100, PN 16 Form B1, EN 1092-1/Alloy C22 (2.4602)	**C 3 8**
Flange DN 100, PN 16 Form B1, EN 1092-1/Enamelled[3]	**C 4 0**
Flange DN 100, PN 40 Form B1, EN 1092-1/316L	**C 4 1**
Flange DN 100, PN 40 Form B1, EN 1092-1/Enamelled[3]	**C 4 2**
Flange DN 100, PN 40 Form C, EN 1092-1/316L	**C 4 3**
Flange DN 100, PN 63 Form B2, EN 1092-1/316L	**C 4 4**
Flange DN 150, PN 16 Form B1, EN 1092-1/316L	**C 4 5**
Flange DN 150, PN 16 Form B1, EN 1092-1/PFA[4]	**C 4 6**
Flange DN 150, PN 40 Form B1, EN 1092-1/316L	**C 4 7**
Flange DN 150, PN 40 Form B1, EN 1092-1/ECTFE[4]	**C 4 8**
Flange DN 150, PN 40 Form B2, EN 1092-1/316L	**C 5 0**
Flange 1" 150 lb ASME B16.5/316L	**C 5 1**
Flange 1" 150 lb RF, ASME B16.5/Alloy C22 (2.4602)	**C 5 2**
Flange 1" 150 lb RF, ASME B16.5/Alloy 400 (2.4360) ZB2977	**C 5 3**
Flange 1" 150 lb RF, ASME B16.5/ECTFE[4]	**C 5 4**
Flange 1" 150 lb RF, ASME B16.5/PFA[4]	**C 5 5**
Flange 1" 150 lb RF, ASME B16.5/Enamelled[3]	**C 5 6**
Flange 1" 300 lb RF, ASME B16.5/316L	**C 5 7**
Flange 1" 300 lb RF, ASME B16.5/ECTFE[4]	**C 5 8**
Flange 1" 600 lb RF, ASME B16.5/316L	**C 6 0**
Flange 1½" 150 lb RF, ASME B16.5/316L	**C 6 1**
Flange 1½" 150 lb RF, ASME B16.5/Alloy C22 (2.4602)	**C 6 2**
Flange 1½" 150 lb RF, ASME B16.5/ECTFE[4]	**C 6 3**
Flange 1½" 150 lb RF, ASME B16.5/PFA[4]	**C 6 4**
Flange 1½" 150 lb RF, ASME B16.5 Enamelled[3]	**C 6 5**
Flange 1½" 150 lb FF, ASME B16.5/ECTFE[4]	**C 6 6**
Flange 1½" 300 lb RF, ASME B16.5/316L	**C 6 7**
Flange 1½" 300 lb RF, ASME B16.5/Alloy 400 (2.4360) ZB2977	**C 6 8**
Flange 1½" 300 lb RF, ASME B16.5/ECTFE[3]	**C 7 0**
Flange 1½" 600 lb RF, ASME B16.5/316L	**C 7 1**
Flange 2" 150 lb RF, ASME B16.5/316L	**C 7 2**
Flange 2" 150 lb RF, ASME B16.5/Alloy C22 (2.4602)	**C 7 3**

© Siemens 2020

Selection and ordering data

	Article No.
SITRANS LVL200 Vibrating point level switch, standard design Detects level and material in liquids and slurries. Short insertion. For hazardous applications.	**7ML5746-** ■■■■■ - ■■ **A 0** ■■■
Flange 2" 150 lb RF, ASME B16.5/Alloy 400 (2.4360) ZB2977	**C 7 4**
Flange 2" 150 lb RF, ASME B16.5/ECTFE[4)]	**C 7 5**
Flange 2" 150 lb RF, ASME B16.5/PFA[4)]	**C 7 6**
Flange 2" 150 lb RF, ASME B16.5/Enamelled[3)]	**C 7 7**
Flange 2" 150 lb FF, ASME B16.5/316L	**C 7 8**
Flange 2" 150 lb FF, ASME B16.5/ECTF[4)]	**C 8 0**
Flange 2" 150 lb SG (small groove), ASME B16.5/316L	**C 8 1**
Flange 2" 300 lb RF, ASME B16.5/316L	**C 8 2**
Flange 2" 300 lb RF, ASME B16.5/Alloy C22 (2.4602)	**C 8 3**
Flange 2" 300 lb RF, ASME B16.5/ECTFE[4)]	**C 8 5**
Flange 2" 300 lb RF, ASME B16.5/PFA[4)]	**C 8 6**
Flange 2" 300 lb RF, ASME B16.5 Enamelled[3)]	**C 8 7**
Flange 2" 300 lb RJF, ASME B16.5/316L	**C 8 8**
Flange 2" 300 lb ST, ASME B16.5/316L	**D 0 0**
Flange 2" 300 lb LG (large groove), ASME B16.5/316L	**D 0 1**
Flange 2" 300 lb LT, ASME B16.5/316L	**D 0 2**
Flange 2" 600 lb RF, ASME B16.5/316L	**D 0 3**
Flange 2" 600 lb RF, ASME B16.5/Alloy 400 (2.4360) ZB2977	**D 0 4**
Flange 2" 600 lb RF, ASME B16.5/ECTFE[4)]	**D 0 5**
Flange 2" 600 lb RJF, ASME B16.5/316L	**D 0 6**
Flange 2" 600 lb LG, ASME B16.5/316L	**D 0 7**
Flange 2" 900 lb RJF, ASME B16.5/316L	**D 0 8**
Flange 2½" 150 lb RF, ASME B16.5/316L	**D 1 0**
Flange 2½" 300 lb RF, ASME B16.5/316L	**D 1 1**
Flange 3" 150 lb RF, ASME B16.5/316L	**D 1 2**
Flange 3" 150 lb RF, ASME B16.5/Alloy C22 (2.4602)	**D 1 3**
Flange 3" 150 lb RF, ASME B16.5/ECTFE[4)]	**D 1 4**
Flange 3" 150 lb RF, ASME B16.5/PFA[4)]	**D 1 5**
Flange 3" 150 lb RF, ASME B16.5/Enamelled[3)]	**D 1 6**
Flange 3" 150 lb FF, ASME B16.5/316L	**D 1 7**
Flange 3" 150 lb FF, ASME B16.5/ECTFE[4)]	**D 1 8**
Flange 3" 150 lb FF, ASME B16.5/PFA[4)]	**D 2 0**
Flange 3" 300 lb RF, ASME B16.5/316L	**D 2 1**
Flange 3" 300 lb RF, ASME B16.5/Alloy C22 (2.4602)	**D 2 2**
Flange 3" 300 lb RF, ASME B16.5/ECTFE[4)]	**D 2 3**
Flange 3" 300 lb RF, ASME B16.5/PFA[4)]	**D 2 4**
Flange 3" 300 lb RF, ASME B16.5/Enamelled[3)]	**D 2 5**
Flange 3" 600 lb RF, ASME B16.5/316L	**D 2 6**
Flange 3½" 150 lb RF, ASME B16.5/316L	**D 2 7**
Flange 3½" 150 lb RF, ASME B16.5/ECTFE[4)]	**D 2 8**
Flange 4" 150 lb RF, ASME B16.5/316L	**D 3 0**
Flange 4" 150 lb RF, ASME B16.5/Alloy C22 (2.4602)	**D 3 1**
Flange 4" 150 lb RF, ASME B16.5/ECTFE[4)]	**D 3 2**
Flange 4" 150 lb RF, ASME B16.5/PFA[4)]	**D 3 3**
Flange 4" 150 lb RF, ASME B16.5/Enamelled[3)]	**D 3 4**
Flange 4" 150 lb LT, ASME B16.5/316L	**D 3 5**
Flange 4" 300 lb RF, ASME B16.5/316L	**D 3 6**
Flange 4" 300 lb RF, ASME B16.5/Alloy C22 (2.4602)	**D 3 7**
Flange 4" 300 lb RF, ASME B16.5/ECTFE[4)]	**D 3 8**
Flange 4" 300 lb RJF, ASME B16.5/316L	**D 4 0**
Flange 4" 300 lb LG, ASME B16.5/316L	**D 4 1**
Flange 4" 300 lb LT, ASME B16.5/316L	**D 4 2**
Flange 4" 600 lb RF, ASME B16.5/316L	**D 4 3**
Flange 4" 600 lb RJF, ASME B16.5/316L	**D 4 4**
Flange 6" 150 lb RF, ASME B16.5/316L	**D 4 5**

	Article No.
SITRANS LVL200 Vibrating point level switch, standard design Detects level and material in liquids and slurries. Short insertion. For hazardous applications.	**7ML5746-** ■■■■■ - ■■ **A 0** ■■■
Flange 6" 150 lb RF, ASME B16.5/Alloy C22 (2.4602)	**D 4 6**
Flange 6" 150 lb RF, ASME B16.5/ECTFE[4)]	**D 4 7**
Flange 6" 150 lb RF, ASME B16.5/PFA[4)]	**D 4 8**
Flange 6" 150 lb RJF, ASME B16.5/316L	**D 5 0**
Flange 6" 300 lb RF, ASME B16.5/316L	**D 5 1**
Flange 8" 150 lb RF, ASME B16.5/316L	**D 5 2**
Flange 8" 150 lb RF, ASME B16.5/ECTFE[4)]	**D 5 3**
Flange 1" BS.10 Table E/316L	**D 5 4**
Flange 1" BS.10 Table E/PFA[4)]	**D 5 5**
Flange 1½" BS.10 Table E/316L	**D 5 6**
Flange 3½" BS.10 Table E/316L	**D 5 7**
Flange 4" BS.10 Table E/ECTFE[4)]	**D 5 8**
Flange DN 40 10K, JIS/316L	**D 6 0**
Flange DN 50 10K, JIS/316L	**D 6 1**
Flange DN 80 10K, JIS/316L	**D 6 2**
Flange DN 100 10K, JIS/316L	**D 6 3**
Thread R1 PN 64, EN 10226-1/316L	**D 6 5**
Flange 2" 900 lb RF, ASME B16.5/316L	**D 7 0**
Adapter/Process temperature	
Without adapter/-50 ... +150 °C (-58 ... +302 °F)	**1**
With adapter/-50 ... +200 °C (-58 ... +392 °F)[13)]	**2**
With adapter/-50 .... +250 °C (-58 ... +482 °F)	**3**
With gas-tight leadthrough/-50 ... +150 °C (-58 ... +302 °F)	**4**
With gas-tight leadthrough/-50 ... +250 °C (-58 ... +482 °F)	**5**
Housing/Cable entry	
Aluminum IP66/IP67/M20 x 1.5	**A**
Aluminum IP66/IP67/½" NPT	**B**
316L stainless steel (electropolished) IP66/IP67/M20 x 1.5	**C**
316L stainless steel (electropolished) IP66/IP67/½" NPT	**D**
Plastic single chamber IP66/IP67/M20 x 1.5	**E**
Plastic single chamber IP66/IP67/½" NPT	**F**
Stainless steel chamber (precision casting) IP66/IP67/M20 x 1.5	**G**
Stainless steel chamber (precision casting) IP66/IP67/½" NPT	**H**
Aluminum IP66/IP67/M20 x 1.5 Special HARTING plug HAN 7D (bent) according to Tier One (ZB7555)[11)]	**V**

© Siemens 2020

Selection and ordering data

	Order code
Further designs	
Please add "**-Z**" to Article No. and specify Order code(s).	
Switching status indication with colors red-green[12]	**A21**
Cleaning including Certificate (oil, grease, and silicone free)	**W01**
Identification label (measurement loop) stainless steel: max. 40 characters, add in plain text. To add more than one line, use a coma ","" for line break.	**Y17**
Identification Label (measurement loop) foil: max. 40 characters add in plain text. To add more than one line, use a coma "," for line break.	**Y18**
NACE0175 to 3.1 Material Certificate for material (EN10204 NACE MR 0175)[8] Note: not available with Process Connection and Rigid extension coatings PFA, ECTFE, and Enamel. NACE not available with Hygienic process connections.	**D07**
Material Inspection certificate 3.1 of EN 10204[8]	**C05**
2.2-Factory certificate for material (EN 10204)[8]	**C15**
Functional Safety (SIL 2). Device suitable for use in accordance with IEC 61508 and IEC 61511[8]	**C20**
Dye penetration test, results confirmed via a 3.1 certificate/instrument (EN 10204)[8]	**C13**
X-ray test + 3.1 certificate/instrument[8]	**C14**
Positive material identification test + 3.1 certificate/instrument[8]	**C16**
Roughness test + 3.1 certificate/instrument[8]	**C18**
3.1-Inspection Certificate for instrument with test data (EN 10204)[8]	**C25**
Quality and test plan	**C26**
Pressure test + 3.1 certificate/instrument[8]	**C31**
Helium leak test + 3.1 certificate/instrument[8]	**C32**
Ferrite measuring accuracy to DIN 32514-1 + 3.1 certificate/instrument[8]	**C60**
Pressure test according to Norsok + 3.1 certificate/instrument[8]	**C61**
Operating Instructions	
All literature is available to download for free, in a range of languages, at	

http://www.siemens.com/processinstrumentation/documentation

Spare Parts and Accessories	Article No.
Electronics module SITRANS LVL200 Relay	**7ML1830-1NC**
Electronics module SITRANS LVL200 Contactless	**7ML1930-6AA**
NAMUR spare electronics module	**A5E35817107**
SITRANS SCSC single channel signal conditioner and remote test	**7ML5760-.....-....**
SITRANS TCSC two channel signal conditioner and remote test	**7ML5761-.....-....**
LVL200 Threaded Welded Socket	
• G¾" A/316L with FKM Seal	**7ML1930-1EE**
• G1" A/316L with FKM Seal	**7ML1930-1EF**
• M27 x 1.5/316L with FKM Seal	**7ML1930-1EG**
• G¾" A/316L with EPDM Seal	**7ML1930-1EH**
• G1" A/316L with EPDM Seal	**7ML1930-1EJ**
• M27 x 1.5/316L with EPDM Seal	**7ML1930-1EK**

1) Available only with Adapter/Process temperature options 1, 3, 4, and 5.
2) Available only with Housing/Protection/Cable option B.
3) Available only with Adapter/Process Temperature options 1, 2, and 4.
4) Not available with Adapter/Process Temperature options 2, 3, and 5.
5) Not available with Adapter/Process Temperature options 2, 4, and 5.
6) Available only with Electronics options 4 and 6.
7) Not available with ECTFE coated probe options.
8) Listed Certificates are not available with all configurations please contact factory for more information.
9) Not available with Housing/Protection/Cable Option V.
10) Not available with PFA and ECTFE coating options.
11) Available only with Approval option A.
12) Available only with Relay Electronic options and Non-hazardous Approval options.
13) Available only with Enamelled Process connection options.
14) Available only with Electronic options 4, 5, and 6.
15) Available only with Aluminum Housing/Protection/Cable options.
16) Not available with Stainless Steel (electropolished) Housing/Protection/Cable options and certain glands.
17) Not available with Plastic and Stainless Steel (electropolished) Housing/Protection/Cable options and certain glands.
18) Not available with Housing/Protection/Cable options D, and V.
19) Not available with Plastic Housing/Protection/Cable options and certain glands.
20) Not available with Housing/Protection/Cable options A, E, G, and V.
21) Available only with Housing/Protection/Cable options B, D, F, and H.
22) Not available with Housing/Protection/Cable options C and V.
23) Available only with Housing/Protection/Cable options A, B, and H.
24) Not available with Approval options C, E, G, H, L, N, V, W, J1A, J1D, and J1E.
25) Not available with Approval options C, E, G, H, N, V, W, J1A, J1D, and J1E.
26) Available only with Electronic option 4.
27) Not available with EAC approval options.
28) Not available with Electronic option 6.

© Siemens 2020

Selection and ordering data

	Article No.
SITRANS LVL200 Vibrating point level switch, rigid extension design ↗	**7ML5747-** ■■■■■ - ■■■■■■
Detects level and material in liquids and slurries. Top mount, with extension options to 6 m (19.69 ft). Ideal for hazardous applications.	
↗ Click on the Article No. for the online configuration in the PIA Life Cycle Portal.	
Electronics	
Contactless electronic switch 20 ... 250 V AC/DC[1)9)14)]	1
Double relay (DPDT) 20 ... 72 V DC/20 ... 250 V AC[14)]	2
NAMUR signal[9)]	4
Transistor (NPN/PNP) 10 ... 55 V DC[1)15)]	5
Two-wire (8/16 mA) 12 ... 36 V DC[25)]	6
Approvals	
Without approvals	A
Overfill protection (WHG)[9)]	B
ATEX II 1G, ½G, 2G Ex ia IIC T6[6)]	W
ATEX II 1G, ½G, 2G Ex ia IIC T6 + WHG[6)9)]	C
ATEX II ½G, 2G Ex d IIC T6 + WHG[5)7)16)]	D
ATEX II 1G, ½G, 2G Ex ia IIC T6 + shipping approvals[6)17)]	E
ATEX II ½G, 2G Ex d IIC T6 + shipping approvals[5)7)16)]	F
ATEX II 1G, ½G, 2G Ex ia IIC T6 + ATEX II ½D IP6X T[6)8)18)]	G
IECEx Ex ia IIC T6[6)19)]	H
Shipping approvals[17)]	K
ATEX II 3G Ex nA II T5 ... T1 X	L
FM (IS) Class I, II, III, Div. 1, Groups A, B, C, D, E, F, G[6)20)]	N
FM (XP) Class I, Div. 1, Groups A, B, C, D; (DIP) Class II, III, Div. 1, Groups E, F, G[2)5)]	P
FM (NI) Class I, Div. 2, Groups A, B, C, D[21)]	Q
IECEx d IIC T6 ... T2 Ga/Gb[5)7)16)]	R
CSA (XP) Class I, II, III Div. 1, Groups A, B, C, D, E, F, G[2)5)7)]	S
CSA (NI) Class I, II, III, Div. 2, Groups A, B, C, D, E, F, G[22)]	T
BR-Ex d IIC T6 ... T2[5)18)]	U
CSA (IS) Class I, II, III Div. 1, Groups A, B, C, D, E, F, G[6)9)]	V
ATEX II ½D, 2D ExtD A20/21, A21 IP6 T...[23)24)]	X
GOST-R/EAC + ATEX II 1G, ½G, 2G Ex ia IIC T6 + WHG[9)24)]	Z J 1 A
GOST-R/EAC + ATEX II ½G, Ex d IIC T2 ... T6 + WHG[5)7)16)26)]	Z J 1 B
GOST-R/EAC + ATEX II ½G, Ex d IIC T2 ... T6 + Ship approval[5)7)16)26)]	Z J 1 C
GOST-R/EAC + ATEX II 1G, ½G, 2G Ex ia IIC T6 + II ½D, 2D ExtD[18)24)]	Z J 1 D
GOST-R/EAC + ATEX II ½D, 2D ExtD A20/21, A21 IP6 T...[18)24)]	Z J 1 E
NOTE:	
When selecting a Process connection option, process connection coating must match the extension coating and the material and surface roughness type.	
Process connection	
Thread G¾" A, PN 64/316L	A 0 0
Thread G¾" A, PN 64/316L Ra < 0.8 µm	A 0 1
Thread ¾" NPT, PN 64/316L	A 0 2
Thread ¾" NPT, PN 64/316L Ra < 0.8 µm	A 0 3
Thread ¾" NPT, PN 64/Alloy 400 (2.4360)	A 0 4
Thread G¾" A, PN 64/Alloy C22 (2.4602)	A 0 5
Thread ¾" NPT, PN 64/Alloy C22 (2.4602)	A 0 6
Thread G1" A, PN 64/316L	A 0 7
Thread G1" A, PN 64/316L ECTFE coated MB1982[4)]	A 0 8
Thread G1" A, PN 64/316L PFA coated[4)]	A 1 0
Thread G1" A, PN 64/Alloy 400 (2.4360)	A 1 1
Thread G1" A, PN 64/316L Ra < 0.8 µm	A 1 3

	Article No.
SITRANS LVL200 Vibrating point level switch, rigid extension design	**7ML5747-** ■■■■■ - ■■■■■■
Detects level and material in liquids and slurries. Top mount, with extension options to 6 m (19.69 ft). Ideal for hazardous applications.	
Thread 1" NPT, PN 64/316L	A 1 4
Thread 1" NPT, PN 64/316L ECTFE coated MB1982[4)]	A 1 5
Thread 1" NPT, PN 64/316L PFA coated[4)]	A 1 6
Thread 1" NPT, PN 64/Alloy 400 (2.4360)	A 1 7
Thread 1" NPT, PN 64/316L Ra < 0.8 µm	A 1 8
Thread G1" A, PN 64/Alloy C22 (2.4602)	A 2 0
Thread G1½" A, PN 64/316L	A 2 1
Thread G1½" A, PN 64/316L Ra <0.8 µm	A 2 2
Thread G1½" A, PN 64/Alloy C22 (2.4602)	A 2 3
Thread 1" NPT, PN 64/Alloy C22 (2.4602)	A 2 4
Thread 1½" NPT, PN 64/316L	A 2 5
Thread 1½" NPT, PN 64/316L Ra < 0.8 µm	A 2 6
Thread 1½" NPT, PN 64/Alloy C22 (2.4602)	A 2 7
Thread G2" A, PN 64/316L	A 2 8
Thread M27 x 1.5 PN 64/316L	A 3 0
Cyl. socket/316Ti/1.4581 ECTFE coated ZB2984[4)]	A 3 1
Conus DN 25 PN 40/316L Ra < 0.3 µm	A 3 2
Conus DN 25 PN 40/316L Ra < 0.8 µm	A 3 3
Conus DN 25 PN 40/ECTFE (ZB3033)[4)]	A 3 4
Conus M52 PN 40/316L	A 3 5
Conus M52 PN 40/316L Ra < 0.3 µm	A 3 6
Conus M52 PN 40/316L Ra < 0.8 µm	A 3 7
Tri-Clamp 1" PN 16/316L Ra < 0.3 µm	A 3 8
Tri-Clamp 1" PN 16/Alloy C22 (2.4602)	A 4 0
Tri-Clamp 1" PN 16/316L Ra < 0.8 µm	A 4 1
Tri-Clamp 1½" PN 16/316L Ra < 0.3 µm	A 4 2
Tri-Clamp 1½" PN 16/Alloy C22 (2.4602)	A 4 3
Tri-Clamp 1½" PN 16/316L Ra < 0.8 µm	A 4 4
Tri-Clamp 2" PN 16/316L Ra < 0.3 µm	A 4 5
Tri-Clamp 2" PN 16/Alloy C22 (2.4602)	A 4 6
Tri-Clamp 2" PN 16/316L Ra < 0.8 µm	A 4 7
Tri-Clamp 2½" PN 10/316L Ra < 0.3 µm	A 4 8
Tri-Clamp 2½" PN 10/316L Ra < 0.8 µm	A 5 0
Tri-Clamp 3" PN 10/316L Ra < 0.3 µm	A 5 1
Clamp 3" PN16 (ø91 mm) DIN32676, ISO2852/ 316L (Ra < 0.8 µm)	A 5 2
Bolting DN 32 PN 40 DIN 11851/316L Ra < 0.3 µm	A 5 3
Bolting DN 32 PN 40 DIN 11851/316L Ra < 0.8 µm	A 5 4
Bolting DN 25 PN 40 DIN 11851/316L Ra < 0.3 µm	A 5 5
Bolting DN 25 PN 40 DIN 11851/316L Ra < 0.8 µm	A 5 6
Bolting DN 40 PN 40 DIN 11851/316L Ra < 0.3 µm	A 5 7
Bolting DN 40 PN 40 DIN 11851/316L Ra < 0.8 µm	A 5 8
Bolting DN 40 PN 40 DIN 11864-1 A/316L Ra < 0.8 µm ZB3052	A 6 0
Bolting DN 50 PN 25 DIN 11851/316L Ra < 0.3 µm	A 6 1
Bolting DN 50 PN 25 DIN 11851/316L Ra < 0.8 µm	A 6 2
Bolting DN 50 PN 25 DIN 11864-1 A/316L Ra < 0.8 µm ZB3052	A 6 3
Hygienic w.compr.nut F40 PN 25/316L	A 6 4
Hygienic w.compr.nut F40 PN 25/316L Ra < 0.3 µm	A 6 5
Hygienic w.compr.nut F40 PN 25/316L Ra < 0.8 µm	A 6 6
Varivent N50-40/316L Ra < 0.3 µm	A 6 7
Varivent N50-40/316L Ra < 0.8 µm	A 6 8
Varivent N125/100/316L Ra < 0.8 µm	A 7 0
DRD flange PN 40/316L ZB3007	A 7 1
SMS DN 38/316L Ra < 0.8 µm[4)]	A 7 2
SMS DN 51 PN 6/316L Ra < 0.8 µm[4)]	A 7 3
Swagelok VCR screwing ZG2579 PN 64/316L	A 7 4

© Siemens 2020

Selection and ordering data

	Article No.
SITRANS LVL200 Vibrating point level switch, rigid extension design Detects level and material in liquids and slurries. Top mount, with extension options to 6 m (19.69 ft). Ideal for hazardous applications.	**7ML5747-** ■■■■■ - ■■■■■■
Neumo biocontrol size 25 PN 16/316L Ra < 0.8 µm	**A 7 5**
Neumo biocontrol size 50 PN 16/316L Ra < 0.8 µm	**A 7 6**
SÜDMO DN 50 PN 10/316L Ra < 0.8 µm	**A 8 0**
Small flange DN 25 PN 1.5 DIN 28403/316L pol. Ra < 0.8 µm	**A 8 1**
Small flange DN 40 PN 1.5 DIN 28403/316L pol. Ra < 0.8 µm	**A 8 2**
Ingold connection PN 16/316L Ra < 0.8 µm	**A 8 3**
Collar clamp connection DN 33,7 PN 40 Form A, DIN 11864-3/1.4435 (BN2, Ra < 0.8 µm)	**A 8 4**
Collar flange DN 50 PN 16 Form A, DIN 11864-2/316L (Ra < 0.8 µm)	**A 8 5**
Flange DN 25 PN 6 Form C, DIN 2501/316L	**A 8 6**
Flange DN 25 PN 6 Form C, DIN 2501/PFA[4)]	**A 8 7**
Flange DN 25 PN 40 Form C, DIN 2501/316L	**A 8 8**
Flange DN 25 PN 40 Form C, DIN 2501/Alloy C22 (2.4602) plated	**B 0 0**
Flange DN 25 PN 40 Form C, DIN 2501/ECTFE[4)]	**B 0 1**
Flange DN 25 PN 40 Form C, DIN 2501/PFA[4)]	**B 0 2**
Flange DN 25 PN 40 Form D, DIN 2501/316L	**B 0 3**
Flange DN 25 PN 40 Form F, DIN 2501/316L	**B 0 4**
Flange DN 25 PN 40 Form N, DIN 2501/316L	**B 0 5**
Flange DN 25 PN 40 Form N, DIN 2501/Alloy 400 (2.4360) solid	**B 0 7**
Flange DN 25 PN 40 V13, DIN 2501/316L	**B 0 8**
Flange DN 32 PN 40 Form C, DIN 2501/316L	**B 1 0**
Flange DN 32 PN 40 Form C, DIN 2501/ECTFE[4)]	**B 1 1**
Flange DN 40 PN 6 Form C, DIN 2501/316L	**B 1 2**
Flange DN 40 PN 6 Form C, DIN 2501/ECTFE[4)]	**B 1 3**
Flange DN 40 PN 40 Form C, DIN 2501/316L	**B 1 4**
Flange DN 40 PN 40 Form C, DIN 2501/Alloy C22 (2.4602) plated	**B 1 5**
Flange DN 40 PN 40 Form C, DIN 2501/ECTFE[4)]	**B 1 6**
Flange DN 40 PN 40 Form C, DIN 2501/PFA[4)]	**B 1 7**
Flange DN 40 PN 40 Form C, DIN 2501/Enamelled[3)]	**B 1 8**
Flange DN 40 PN 40 Form F, DIN 2501/316L	**B 2 0**
Flange DN 40 PN 40 Form N, DIN 2501/316L	**B 2 1**
Flange DN 40 PN 40 Form E, DIN 2501/316L	**B 2 2**
Flange DN 40 PN 40 V13, DIN 2501/316L	**B 2 3**
Flange DN 50 PN 40 Form C, DIN 2501/316L	**B 2 4**
Flange DN 50 PN 40 Form C, DIN 2501/Alloy C22 (2.4602) plated	**B 2 5**
Flange DN 50 PN 40 Form C, DIN 2501/ECTFE[4)]	**B 2 6**
Flange DN 50 PN 40 Form C, DIN 2501/ECTFE (ZB3108)[4)]	**B 2 7**
Flange DN 50 PN 40 Form C, DIN 2501/PFA[4)]	**B 2 8**
Flange DN 50 PN 40 Form D, DIN 2501/316L	**B 3 0**
Flange DN 50 PN 40 Form D, DIN 2501/Alloy C22 (2.4602)	**B 3 1**
Flange DN 50 PN 40 Form F, DIN 2501/316L	**B 3 2**
Flange DN 50 PN 40 Form N, DIN 2501/316L	**B 3 3**
Flange DN 50 PN 40 Form N, DIN 2501/Alloy C22 (2.4602) solid	**B 3 4**
Flange DN 50 PN 40 Form E, DIN 2501/316L	**B 3 5**
Flange DN 50 PN 40 V13, DIN 2501/316L	**B 3 6**
Flange DN 50 PN 40 R13, DIN 2501/316L	**B 3 7**
Flange DN 50 PN 64 Form F, DIN 2501/316L	**B 3 8**
Flange DN 50 PN 64 Form C, DIN 2501/316L	**B 4 1**
Flange DN 50 PN 64 Form L, DIN 2501/316L	**B 4 2**

	Article No.
SITRANS LVL200 Vibrating point level switch, rigid extension design Detects level and material in liquids and slurries. Top mount, with extension options to 6 m (19.69 ft). Ideal for hazardous applications.	**7ML5747-** ■■■■■ - ■■■■■■
Flange DN 50 PN 100 Form E, DIN 2501/316L	**B 4 3**
Flange DN 50 PN 100 Form L, DIN 2501/316L	**B 4 4**
Flange DN 65 PN 40 Form C, DIN 2501/316L	**B 4 5**
Flange DN 65 PN 40 Form C, DIN 2501/ECTFE[4)]	**B 4 7**
Flange DN 65 PN 40 Form C, DIN 2501/PFA[4)]	**B 4 8**
Flange DN 65 PN 40 Form F, DIN 2501/316L	**B 5 0**
Flange DN 65 PN 64 Form E, DIN 2501/316L	**B 5 1**
Flange DN 80 PN 40 Form C, DIN 2501/316L	**B 5 2**
Flange DN 80 PN 40 Form C, DIN 2501/Alloy C22 (2.4602) plated	**B 5 3**
Flange DN 80 PN 40 Form C, DIN 2501/ECTFE[4)]	**B 5 4**
Flange DN 80 PN 40 Form C, DIN 2501/PFA[4)]	**B 5 5**
Flange DN 80 PN 40 Form F, DIN 2501/316L	**B 5 6**
Flange DN 80 PN 40 Form N, DIN 2501/316L	**B 5 7**
Flange DN 100 PN 16 Form C, DIN 2501/316L	**B 6 0**
Flange DN 100 PN 16 Form C, DIN 2501/Alloy C22 (2.4602) plated	**B 6 1**
Flange DN 100 PN 16 Form C, DIN 2501/ECTFE[4)]	**B 6 2**
Flange DN 100 PN 16 Form C, DIN 2501/PFA[4)]	**B 6 3**
Flange DN 100 PN 16 Form D, DIN 2501/316L	**B 6 4**
Flange DN 100 PN 16 Form F, DIN 2501/316L	**B 6 5**
Flange DN 100 PN 16 Form N, DIN 2501/316L	**B 6 6**
Flange DN 100 PN 40 Form C, DIN 2501/316L	**B 6 7**
Flange DN 100 PN 40 Form C, DIN 2501/ECTFE[4)]	**B 6 8**
Flange DN 100 PN 40 Form C, DIN 2501/PFA[4)]	**B 7 0**
Flange DN 100 PN 40 Form C, DIN 2501/Enamelled[3)]	**B 7 1**
Flange DN 100 PN 40 Form F, DIN 2501/316L	**B 7 2**
Flange DN 100 PN 40 Form N, DIN 2501/316L	**B 7 3**
Flange DN 100 PN 40 V13, DIN 2501/316L	**B 7 4**
Flange DN 100 PN 64 Form E, DIN 2501/316L	**B 7 5**
Flange DN 100 PN 100 Form E, DIN 2501/316L	**B 7 6**
Flange DN 100 PN 100 Form L, DIN 2501/316L	**B 7 7**
Flange DN 125 PN 16 Form F, DIN 2501/316L	**B 7 8**
Flange DN 125 PN 40 Form C, DIN 2501/316L	**B 8 0**
Flange DN 125 PN 40 Form N, DIN 2512/316L	**B 8 1**
Flange DN 150 PN 16 Form C, DIN 2501/316L	**B 8 2**
Flange DN 150 PN 16 Form C, DIN 2501/Alloy C22 (2.4602) plated	**B 8 3**
Flange DN 150 PN 16 Form C, DIN 2501/ECTFE[4)]	**B 8 4**
Flange DN 150 PN 16 Form C, DIN 2501/PFA[4)]	**B 8 5**
Flange DN 150 PN 16 Form D, DIN 2501/316L	**B 8 6**
Flange DN 150 PN 40 Form C, DIN 2501/316L	**B 8 7**
Flange DN 150 PN 40 Form C, DIN 2501/Alloy C22 (2.4602) plated	**B 8 8**

© Siemens 2020

Selection and ordering data

	Article No.
SITRANS LVL200 Vibrating point level switch, rigid extension design Detects level and material in liquids and slurries. Top mount, with extension options to 6 m (19.69 ft). Ideal for hazardous applications.	**7ML5747-** ■■■■■ - ■■■■■■
Flange DN 150 PN 40 Form F, DIN 2501/316L	**C 0 0**
Flange DN 150 PN 40 Form N, DIN 2512/316L	**C 0 1**
Flange DN 200 PN 10 Form C, DIN 2501/ECTFE[4)]	**C 0 2**
Flange DN 200 PN 16 Form C, DIN 2501/316L	**C 0 3**
Flange DN 25 PN 40 Form B1, EN 1092-1/316L	**C 0 4**
Flange DN 25 PN 40 Form B1, EN 1092-1/Alloy C22 (2.4602) plated	**C 0 5**
Flange DN 25 PN 40 Form B1, EN/316L/PFA[4)]	**C 0 6**
Flange DN 25 PN 40 Form B1, EN 1092-1/Enamelled[3]	**C 0 7**
Flange DN 25 PN 40 Form B2, EN 1092-1/316L	**C 0 8**
Flange DN 25 PN 40 Form F, EN 1092-1/316L	**C 1 0**
Flange DN 25 PN 63 Form B1, EN 1092-1/316L	**C 1 1**
Flange DN 25 PN 100 Form B2, EN 1092-1/316L	**C 1 2**
Flange DN 40 PN 40 Form B1, EN/316L	**C 1 3**
Flange DN 40 PN 40 Form B1, EN 1092-1/PFA[4)]	**C 1 4**
Flange DN 40 PN 40 Form B2, EN/316L	**C 1 5**
Flange DN 50 PN 40 Form B1, EN/316L	**C 1 6**
Flange DN 50 PN 40 Form B1, EN 1092-1/Alloy C22 (2.4602) plated	**C 1 7**
Flange DN 50 PN 40 Form B1, EN 1092-1/Alloy 400 (2.4360) ZB2977	**C 1 8**
Flange DN 50 PN 40 Form B1, EN 1092-1/ECTFE[4)]	**C 2 0**
Flange DN 50 PN 40 Form B1, EN/316L/PFA[4)]	**C 2 1**
Flange DN 50 PN 40 Form B1, EN 1092-1/Enamelled[3)]	**C 2 2**
Flange DN 50 PN 40 Form C, EN 1092-1/316L	**C 2 3**
Flange DN 50 PN 40 Form D, EN/316L	**C 2 4**
Flange DN 50 PN 40 Form B2, EN 1092-1/316L	**C 2 6**
Flange DN 50 PN 40 Form E, EN 1092-1/316L	**C 2 7**
Flange DN 80 PN 40 Form B1, EN 1092-1/316L	**C 2 8**
Flange DN 80 PN 40 Form B1, EN 1092-1/Alloy C22 (2.4602) plated	**C 3 0**
Flange DN 80 PN 40 Form B1, EN 1092-1/ECTFE[4)]	**C 3 1**
Flange DN 80 PN 40 Form B1, EN 1092-1/Enamelled[3)]	**C 3 2**
Flange DN 80 PN 40 Form B2, EN 1092-1/316L	**C 3 3**
Flange DN 100 PN 16 Form B1, EN 1092-1/316L	**C 3 4**
Flange DN 100 PN 16 Form B1, EN 1092-1/Alloy C22 (2.4602) plated	**C 3 5**
Flange DN 100 PN 16 Form B1, EN 1092-1/Enamelled[3)]	**C 3 6**
Flange DN 100 PN 40 Form B1, EN 1092-1/316L	**C 3 7**
Flange DN 100 PN 40 Form B1, EN 1092-1/Enamelled[3)]	**C 3 8**
Flange DN 100 PN 40 Form C, EN 1092-1/316L	**C 4 0**
Flange DN 100 PN 63 Form B2, EN 1092-1/316L	**C 4 1**
Flange DN 150 PN 16 Form B1, EN 1092-1/316L	**C 4 2**
Flange DN 150 PN 16 Form B1, EN 1092-1/PFA[4)]	**C 4 3**

	Article No.
SITRANS LVL200 Vibrating point level switch, rigid extension design Detects level and material in liquids and slurries. Top mount, with extension options to 6 m (19.69 ft). Ideal for hazardous applications.	**7ML5747-** ■■■■■ - ■■■■■■
Flange DN 150 PN 40 Form B1, EN 1092-1/316L	**C 4 4**
Flange DN 150 PN 40 Form B1, EN 1092-1/ECTFE[4)]	**C 4 5**
Flange DN 150 PN 40 Form B2, EN 1092-1/316L	**C 4 6**
Flange 1" 150 lb ASME B16.5/316L	**C 4 7**
Flange 1" 150 lb RF, ASME B16.5/Alloy C22 (2.4602) plated	**C 4 8**
Flange 1" 150 lb RF, ASME B16.5/Alloy 400 (2.4360) ZB2977	**C 5 0**
Flange 1" 150 lb RF, ASME B16.5/ECTFE[4)]	**C 5 1**
Flange 1" 150 lb RF, ASME B16.5/PFA[4)]	**C 5 2**
Flange 1" 150 lb RF, ASME B16.5/Enamelled[3)]	**C 5 3**
Flange 1" 300 lb RF, ASME B16.5/316L	**C 5 4**
Flange 1" 300 lb RF, ASME B16.5/ECTFE[4)]	**C 5 5**
Flange 1" 600 lb RF, ASME B16.5/316L	**C 5 6**
Flange 1½" 150 lb RF, ASME B16.5/316L	**C 5 7**
Flange 1½" 150 lb RF, ASME B16.5/Alloy C22 (2.4602) plated	**C 5 8**
Flange 1½" 150 lb RF, ASME B16.5/ECTFE[4)]	**C 6 0**
Flange 1½" 150 lb RF, ASME B16.5/PFA[4)]	**C 6 1**
Flange 1½" 150 lb RF, ASME B16.5 Enamelled[3)]	**C 6 2**
Flange 1½" 150 lb FF, ASME B16.5/ECTFE[4)]	**C 6 3**
Flange 1½" 300 lb RF, ASME B16.5/316L	**C 6 4**
Flange 1½" 300 lb RF, ASME B16.5/Alloy 400 (2.4360) ZB2977	**C 6 5**
Flange 1½" 300 lb RF, ASME B16.5/ECTFE[4)]	**C 6 6**
Flange 1½" 600 lb RF, ASME B16.5/316L	**C 6 7**
Flange 2" 150 lb RF, ASME B16.5/316L	**C 6 8**
Flange 2" 150 lb RF, ASME B16.5/Alloy C22 (2.4602) plated	**C 7 0**
Flange 2" 150 lb RF, ASME B16.5/Alloy 400 (2.4360) ZB2977	**C 7 1**
Flange 2" 150 lb RF, ASME B16.5/ECTFE[4)]	**C 7 2**
Flange 2" 150 lb RF, ASME B16.5/PFA[4)]	**C 7 3**
Flange 2" 150 lb RF, ASME B16.5/Enamelled[3)]	**C 7 4**
Flange 2" 150 lb FF, ASME B16.5/316L	**C 7 5**
Flange 2" 150 lb FF, ASME B16.5/ECTFE[4)]	**C 7 6**
Flange 2" 150 lb SG (small groove), ASME B16.5/316L	**C 7 7**
Flange 2" 300 lb RF, ASME B16.5/316L	**C 7 8**
Flange 2" 300 lb RF, ASME B16.5/Alloy C22 (2.4602) plated	**C 8 0**
Flange 2" 300 lb RF, ASME B16.5/ECTFE[4)]	**C 8 2**
Flange 2" 300 lb RF, ASME B16.5/PFA[4)]	**C 8 3**
Flange 2" 300 lb RJF, ASME B16.5/316L	**C 8 5**
Flange 2" 300 lb ST, ASME B16.5/316L	**C 8 6**
Flange 2" 300 lb LG (large groove), ASME B16.5/316L	**C 8 7**
Flange 2" 300 lb LT, ASME B16.5/316L	**C 8 8**
Flange 2" 600 lb RF, ASME B16.5/316L	**D 0 0**
Flange 2" 600 lb RF, ASME B16.5/Alloy 400 (2.4360) ZB2977	**D 0 1**
Flange 2" 600 lb RF, ASME B16.5/ECTFE[4)]	**D 0 2**
Flange 2" 600 lb RJF, ASME B16.5/316L	**D 0 3**
Flange 2" 600 lb LG, ASME B16.5/316L	**D 0 4**
Flange 2" 900 lb RJF, ASME B16.5/316L	**D 0 5**
Flange 2½" 150 lb RF, ASME B16.5/316L	**D 0 6**
Flange 2½" 300 lb RF, ASME B16.5/316L	**D 0 7**
Flange 3" 150 lb RF, ASME B16.5/316L	**D 0 8**
Flange 3" 150 lb RF, ASME B16.5/Alloy C22 (2.4602) plated	**D 1 0**
Flange 3" 150 lb RF, ASME B16.5/Alloy 400 (2.4360) ZB2977	**D 1 1**
Flange 3" 150 lb RF, ASME B16.5/ECTFE[4)]	**D 1 2**
Flange 3" 150 lb RF, ASME B16.5/PFA[4)]	**D 1 3**

© Siemens 2020

Selection and ordering data

	Article No. 7ML5747-
SITRANS LVL200 Vibrating point level switch, rigid extension design Detects level and material in liquids and slurries. Top mount, with extension options to 6 m (19.69 ft). Ideal for hazardous applications.	
Flange 3" 150 lb RF, ASME B16.5/Enamelled[3]	D 1 4
Flange 3" 150 lb FF, ASME B16.5/316L	D 1 5
Flange 3" 150 lb FF, ASME B16.5/ECTFE[4]	D 1 6
Flange 3" 150 lb FF, ASME B16.5/PFA[4]	D 1 7
Flange 3" 300 lb RF, ASME B16.5/316L	D 1 8
Flange 3" 300 lb RF, ASME B16.5/Alloy C22 (2.4602) plated	D 2 0
Flange 3" 300 lb RF, ASME B16.5/ECTFE[4]	D 2 1
Flange 3" 300 lb RF, ASME B16.5/PFA[4]	D 2 2
Flange 3" 300 lb RF, ASME B16.5/Enamelled[3]	D 2 3
Flange 3" 600 lb RF, ASME B16.5/316L	D 2 4
Flange 3½" 150 lb RF, ASME B16.5/316L	D 2 5
Flange 3½" 150 lb RF, ASME B16.5/ECTFE[4]	D 2 6
Flange 4" 150 lb RF, ASME B16.5/316L	D 2 7
Flange 4" 150 lb RF, ASME B16.5/Alloy C22 (2.4602) plated	D 2 8
Flange 4" 150 lb RF, ASME B16.5/ECTFE[4]	D 3 0
Flange 4" 150 lb RF, ASME B16.5/PFA[4]	D 3 1
Flange 4" 150 lb RF, ASME B16.5/Enamelled[3]	D 3 2
Flange 4" 150 lb LT, ASME B16.5/316L	D 3 3
Flange 4" 300 lb RF, ASME B16.5/316L	D 3 4
Flange 4" 300 lb RF, ASME B16.5/Alloy C22 (2.4602) plated	D 3 5
Flange 4" 300 lb RF, ASME B16.5/ECTFE[4]	D 3 6
Flange 4" 300 lb RJF, ASME B16.5/316L	D 3 7
Flange 4" 300 lb LG, ASME B16.5/316L	D 3 8
Flange 4" 300 lb LT, ASME B16.5/316L	D 4 0
Flange 4" 600 lb RF, ASME B16.5/316L	D 4 1
Flange 4" 600 lb RJF, ASME B16.5/316L	D 4 2
Flange 5" 150 lb RF, ASME B16.5/316L	D 4 3
Flange 6" 150 lb RF, ASME B16.5/316L	D 4 4
Flange 6" 150 lb RF, ASME B16.5/Alloy C22 (2.4602) plated	D 4 5
Flange 6" 150 lb RF, ASME B16.5/ECTFE[4]	D 4 6
Flange 6" 150 lb RF, ASME B16.5/PFA[4]	D 4 7
Flange 6" 150 lb RJF, ASME B16.5/316L	D 4 8
Flange 6" 300 lb RF, ASME B16.5/316L	D 5 0
Flange 8" 150 lb RF, ASME B16.5/316L	D 5 1
Flange 8" 150 lb RF, ASME B16.5/ECTFE[4]	D 5 2
Flange 1" BS.10 Table E/316L	D 5 3
Flange 1" BS.10 Table E/PFA[4]	D 5 4
Flange 1½" BS.10 Table E/316L	D 5 5
Flange 3½" BS.10 Table E/316L	D 5 6
Flange 4" BS.10 Table E/ECTFE[4]	D 5 7
Flange DN 40 10K, JIS/316L	D 5 8
Flange DN 50 10K, JIS/316L	D 6 0
Flange DN 80 10K, JIS/316L	D 6 1
Flange DN 100 10K, JIS/316L	D 6 2
Thread R1 PN 64, EN10226-1/316L[11]	D 6 5
Flange 2" 900 lb RF, ASME B16.5/316L	D 7 0
Flange 4" 150 lb RF, ASME B16.5/Alloy C22 (2.4602) solid	D 7 1
Adapter/Process temperature	
Without adapter/-50 ... +150 °C	1
With adapter/-50 ... +200 °C[13]	2
With adapter/-50 ... +250 °C	3
With gas-tight leadthrough/-50 ... +150 °C	4
With gas-tight leadthrough/-50 ... +250 °C	5
Housing/Cable entry	
Aluminum IP66/IP67/M20 x 1.5	A
Aluminum IP66/IP67/½" NPT	B
316L stainless steel (electropolished) IP66/IP67/M20 x 1.5	C
316L stainless steel (electropolished) IP66/IP67/½" NPT	D

	Article No. 7ML5747-
SITRANS LVL200 Vibrating point level switch, rigid extension design Detects level and material in liquids and slurries. Top mount, with extension options to 6 m (19.69 ft). Ideal for hazardous applications.	
Plastic single chamber IP66/IP67/M20 x 1.5	E
Plastic single chamber IP66/IP67/½" NPT	F
Stainless steel chamber (precision casting) IP66/IP67/M20 x 1.5	G
Stainless steel chamber (precision casting) IP66/IP67/½" NPT	H
Aluminum IP66/IP67/M20 x 1.5 Special HARTING plug HAN 7D (bent) according to Tier One (ZB7555)	V
NOTE: **When selecting a Rigid Extension option, extension coating must match the process connection coating and the material and surface roughness type.**	
Rigid Extension 316L	
80 ... 500 mm	A 0
501 ... 1 000 mm	A 1
1 001 ... 1 500 mm	A 2
1 501 ... 2 000 mm	A 3
2 001 ... 2 500 mm	A 4
2 501 ... 3 000 mm	A 5
3 001 ... 3 500 mm	A 6
3 501 ... 4 000 mm	A 7
Rigid Extension ECTFE coated	
80 ... 500 mm	B 0
501 ... 1 000 mm	B 1
1 001 ... 1 500 mm	B 2
1 501 ... 2 000 mm	B 3
2 001 ... 2 500 mm	B 4
2 501 ... 3 000 mm	B 5
Rigid Extension PFA coated	
80 ... 500 mm	C 0
501 ... 1 000 mm	C 1
1 001 ... 1 500 mm	C 2
1 501 ... 2 000 mm	C 3
2 001 ... 2 500 mm	C 4
2 501 ... 3 000 mm	C 5
3 001 ... 3 500 mm	C 6
3 501 ... 4 000 mm	C 7
Rigid Extension 316L Ra ≤ 0.8 µm	
80 ... 500 mm	D 0
501 ... 1 000 mm	D 1
1 001 ... 1 500 mm	D 2
1 501 ... 2 000 mm	D 3
2 001 ... 2 500 mm	D 4
2 501 ... 3 000 mm	D 5
3 001 ... 3 500 mm	D 6
3 501 ... 4 000 mm	D 7
Rigid Extension 316L Ra ≤ 0.3 µm	
80 ... 500 mm	E 0
501 ... 1 000 mm	E 1
1 001 ... 1 500 mm	E 2
1 501 ... 2 000 mm	E 3
2 001 ... 2 500 mm	E 4
2 501 ... 3 000 mm	E 5
3 001 ... 3 500 mm	E 6
3 501 ... 4 000 mm	E 7
Rigid Extension Enamelled version	
80 ... 250 mm	F 0
251 ... 500 mm	F 1
501 ... 750 mm	F 2
751 ... 1 000 mm	F 3
1 001 ... 1 250 mm	F 4
1 251 ... 1 500 mm	F 5

© Siemens 2020

Selection and ordering data

	Article No.
SITRANS LVL200 Vibrating point level switch, rigid extension design Detects level and material in liquids and slurries. Top mount, with extension options to 6 m (19.69 ft). Ideal for hazardous applications.	**7ML5747-** ■■■■■ - ■■■■■■
Rigid Extension Alloy C22 (2.4602)	
80 ... 500 mm	**G 0**
501 ... 1 000 mm	**G 1**
1 001 ... 1 500 mm	**G 2**
1 501 ... 2 000 mm	**G 3**
2 001 ... 2 500 mm	**G 4**
2 501 ... 3 000 mm	**G 5**
3 001 ... 3 500 mm	**G 6**
3 501 ... 4 000 mm	**G 7**
Rigid Extension Alloy 400 (2.4360)	
80 ... 500 mm	**H 0**
501 ... 1 000 mm	**H 1**
1 001 ... 1 500 mm	**H 2**
1 501 ... 2 000 mm	**H 3**
2 001 ... 2 500 mm	**H 4**
2 501 ... 3 000 mm	**H 5**

Further designs Please add "**-Z**" to Article No. and specify Order code(s).	Order code
Switching status indication with colors red-green[12]	**A21**
Cleaning including Certificate (oil, grease, and silicone free)	**W01**
Enter the total insertion length in plain text description, max. 4 000 mm (157.48 inch)	**Y01**
Identification label (measurement loop) stainless steel: max. 40 characters, add in plain text. To add more than one line, use a coma "," for line break.	**Y17**
Identification label (measurement loop) foil: max. 40 characters add in plain text. To add more than one line, use a coma "," for line break.	**Y18**
NACE0175 to 3.1 Material Certificate for material (EN 10204 NACE MR 0175)[8] Note: not available with Process connection and Rigid extension coatings PFA, ECTFE, and Enamel. NACE not available with Hygienic process connections.	**D07**
Material Inspection certificate 3.1 of EN 10204	**C05**
2.2-Factory certificate for material (EN 10204)[8]	**C15**
Functional Safety (SIL 2). Device suitable for use in accordance with IEC 61508 and IEC 61511[8]	**C20**
Dye penetration test, results confirmed via a 3.1 certificate/instrument (EN 10204)[8]	**C13**
X-ray test + 3.1 certificate/instrument[8]	**C14**
Positive material identification test + 3.1 certificate/instrument[8]	**C16**
Roughness test + 3.1 certificate/instrument[8]	**C18**
3.1-Inspection Certificate for instrument with test data (EN 10204)	**C25**
Quality and test plan	**C26**
Pressure test + 3.1 certificate/instrument[8]	**C31**
Helium leak test + 3.1 certificate/instrument[8]	**C32**
Ferrite measuring accuracy to DIN 32514-1 + 3.1 certificate/instrument[8]	**C60**
Pressure test according to Norsok + 3.1 certificate/instrument[8]	**C61**
Operating Instructions All literature is available to download for free, in a range of languages, at	

http://www.siemens.com/processinstrumentation/documentation

Spare Parts and Accessories	Article No.
Electronics module SITRANS LVL200 Relay	**7ML1830-1NC**
Electronics module SITRANS LVL200 Contactless	**7ML1930-6AA**
NAMUR spare electronics module	**A5E35817107**
SITRANS SCSC single channel signal conditioner and remote test	**7ML5760-.....-....**
SITRANS TCSC two channel signal conditioner and remote test	**7ML5761-.....-....**
Lock fitting, unpressurized, G1" A/316L	**7ML1930-1DQ**
Lock fitting, unpressurized, 1" NPT/316L	**7ML1930-1DR**
Lock fitting, unpressurized, G1 ... 1/2" A/316L	**7ML1930-1DS**
Lock fitting, unpressurized, 1 ... 1/2" NPT/316L	**7ML1930-1DT**
Lock fitting, -1 ... 16 bar, G1" A/316L	**7ML1930-1DU**
Lock fitting, -1 ... 16 bar, 1" NPT/316L	**7ML1930-1DV**
Lock fitting, -1 ... 16 bar, G1 1/2" A/316L	**7ML1930-1DW**
Lock fitting, -1 ... 16 bar, 1 1/2" NPT/316L	**7ML1930-1DX**
Lock fitting, -1 ... 64 bar, G1" A/316L	**7ML1930-1EA**
Lock fitting, -1 ... 64 bar, 1" NPT/316L	**7ML1930-1EB**
Lock fitting, -1 ... 64 bar, G1 1/2" A/316L	**7ML1930-1EC**
Lock fitting, -1 ... 64 bar, 1 1/2" NPT/316L	**7ML1930-1ED**

1) Available only with Adapter/Process temperature options 1, 3, 4, and 5.
2) Available only with Housing/Cable entry option B.
3) Available only with Adapter/Process temperature options 1, 2, and 4.
4) Not available with Adapter/Process temperature options 2, 3, and 5.
5) Not available with Adapter/Process temperature options 2, 4, and 5.
6) Available only with Electronics options 4 and 6.
7) Available only with rigid extension options less than 3 001 mm.
8) Listed Certificates are not available with all configurations please contact factory for more information.
9) Not available with Housing/Protection/Cable option V.
10) Not available with PFA, ECTFE, and enamelled coating options.
11) Available only with some 316L extensions.
12) Available only with relay electronic options and non-hazardous Approval options.
13) Available only with Enamelled Process connection/Material options.
14) Not available with Approval options C, E, G, H, L, N, V, and W.
15) Not available with Approval options C, E, G, H, N, and V.
16) Only available with Aluminum Housing/Protection/Cable options and certain glands.
17) Not available with Stainless Steel Electropolish Housing/Protection/Cable options and certain glands.
18) Not available with Plastic or Stainless Steel Electropolish Housing/Protection/Cable options and certain glands.
19) Not available with Housing/Protection/Cable options D and V.
20) Not available with Housing/Protection/Cable options A, E, G, and V.
21) Not available with some Housing/Protection/Cable gland options.
22) Not available with Housing/Protection/Cable options A, C, and V.
23) Not available with Plastic Housing/Protection/Cable options.
24) Available only with Electronic option 4.
25) Not available with FM approval options.

© Siemens 2020

Selection and ordering data

	Article No.
SITRANS LVL200 Vibrating point level switch, high temperature and pressure design ↗	**7ML5748-** ■■■■■ - ■■■■
Detects level and material in liquids and slurries in extreme environments. Extension options to 3 m (9.84 ft).	
↗ Click on the Article No. for the online configuration in the PIA Life Cycle Portal.	
Version/Material	
Compact version/Inconel 718 (2.4668)[1)2)]	1
With tube extension/316L and Inconel 718 (2.4668)[1)3)]	2
With tube extension/Alloy C22 (2.4602) and Inconel 718 (2.4668)[4)]	3
Approvals	
Without approvals	A
Ship approval	B
Overfill protection WHG[7)]	C
ATEX II ½G, 2G Ex d IIC T6[6)9)]	D
ATEX II 1G, ½G, 2G Ex ia IIC T6[5)9)]	F
ATEX II 1G, ½G, 2G Ex ia IIC T6 + ship approval[5)9)10)]	G
ATEX II 1G, ½G, 2G Ex ia IIC T6 + Overfill protection (WHG)[6)7)9)]	H
ATEX II ½G, 2G Ex d IIC T6 + Overfill protection (WHG)[6)7)9)]	J
FM (NI) Class I, Div. 2, Groups A, B, C, D T6 ... T1[9)11)]	N
FM (NI) Class I, Div. 2, Groups A, B, C, D T6 ... T1 + Ship approval[6)9)]	P
FM (IS) Class I, Div. 1, Groups A, B, C, D Zone 0, 0/1, 1, AEx ia IIC T6 ... T1 Ga, Ga/Gb, Gb[5)9)12)]	Q
FM (XP) Class I, Div. 1, Groups A, B, C, D T6 ... T1, Zone 0/1, 1, AEx d IIC T6 ... T1 Ga/Gb, Gb[6)9)]	R
FM (XP) Class I, Div. 1, Groups A, B, C, D T6 ... T1, Zone 0/1, 1, AEx d IIC T6 ... T1 Ga/Gb, Gb + Ship approval[6)9)]	S
IEC Ex d IIC T6[6)9)]	E
IEC Ex ia IIC T6 + Ship approval[5)9)10)]	U
IEC Ex ia IIC T6[5)9)]	T
$_{C}CSA_{US}$ (NI) Class I, Div. 2, Groups A, B , C, D, (DIP) Class II, III, Div. 1, Groups E, F, G[6)9)]	V
$_{C}CSA_{US}$ (NI) Class I, Div. 2, Groups A, B, C, D, (DIP) Class II, III, Div. 1, Groups E, F, G + Ship approval[6)9)]	W
$_{C}CSA_{US}$ (IS) Class I, II, III, Div. 1, Groups A, B, C, D, E, F, G[5)9)12)]	X
$_{C}CSA_{US}$ (IS) Class I, II, III, Div. 1, Groups A, B, C, D, E, F, G + Ship approval[5)9)13)]	Y
$_{C}CSA_{US}$ (XP) Class I, II, III, Div. 1, Groups A, B, C, D, E, F, G[6)9)]	K
$_{C}CSA_{US}$ (XP) Class I, II, III, Div. 1, Groups A, B, C, D, E, F, G + Ship approval[6)9)]	L
Process connection	
Thread G1 PN 100, DIN 3852-A/316L	A 0
Thread G1 PN 160, DIN 3852-A/Inconel 718 (2.4668)	A 1
Thread 1" NPT PN 100, ASME B1.20.1/316L	A 2
Thread 1" NPT PN 160, ASME B1.20.1/Inconel 718 (2.4668)	A 3
Flange DN 50 PN 40 Form C, DIN 2501/316/316	A 4
Flange DN 50 PN 40 Form C, DIN 2501/316/316L, with Alloy C22 (2.4602) coating	A 5
Flange DN 50 PN 40 Form N, DIN 2501/316/316L	A 6
Flange DN 50 PN 40 Form V13, DIN 2501/316/316L	A 7
Flange DN 50 PN 40 Form V13, DIN 2501/Alloy C22 (2.4602) solid	A 8
Flange DN 50 PN 40 Form V13, DIN 2501/316/316L, with Alloy C22 (2.4602) coating	B 0

	Article No.
SITRANS LVL200 Vibrating point level switch, high temperature and pressure design	**7ML5748-** ■■■■■ - ■■■■
Detects level and material in liquids and slurries in extreme environments. Extension options to 3 m (9.84 ft).	
Flange DN 50 PN 64 Form E, DIN 2501/316/316L	B 1
Flange DN 50 PN 100 Form C, DIN 2501/316/316L	B 2
Flange DN 50 PN 100 Form F, DIN 2501/316/316L	B 3
Flange DN 50 PN 100 Form V13, DIN 2501/316/316L	B 4
Flange DN 50 PN 160 Form C, DIN 2501/316/316L	B 5
Flange DN 50 PN 160 Form F, DIN 2501/316/316L	B 6
Flange DN 65 PN 16 Form C, DIN 2501/316/316L	B 7
Flange DN 65 PN 40 Form C, DIN 2501/316/316L	B 8
Flange DN 65 PN 100 Form C, DIN 2501/316/316L	C 0
Flange DN 80 PN 40 Form C, DIN 2501/316/316L	C 1
Flange DN 80 PN 100 Form C, DIN 2501/316/316L	C 2
Flange DN 80 PN 160 Form F, DIN 2501/316/316L	C 3
Flange DN 80 PN 160 Form L, DIN 2501/316/316L	C 4
Flange DN 80 PN 250 Form L, DIN 2501/316/316L	C 5
Flange DN 80 PN 250 Form L, DIN 2501/Alloy C22 (2.4602) solid	C 6
Flange DN 100 PN 16 Form C, DIN 2501/316/316L	C 7
Flange DN 100 PN 40 Form C, DIN 2501/316/316L	C 8
Flange DN 100 PN 100 Form E, DIN 2501/316/316L	D 0
Flange DN 100 PN 160 Form L, DIN 2501/316/316L	D 1
Flange DN 125 PN 16 Form C, DIN 2501/316/316L	D 2
Flange DN 125 PN 40 Form C, DIN 2501/316/316L	D 3
Flange DN 150 PN 16 Form C, DIN 2501/316/316L	D 4
Flange DN 150 PN 16 Form C, DIN 2501/316/316L, with Alloy C22 (2.4602) coating	D 5
Flange DN 150 PN 40 Form C, DIN 2501/316/316L	D 6
Flange DN 150 PN 160 Form L, DIN 2501/316/316L	D 7
Flange DN 200 PN 16 Form C, DIN 2501/316/316L	D 8
Flange DN 200 PN 64 Form C, DIN 2501/316/316L	E 0
Flange DN 250 PN 16 Form C, DIN 2501/316/316L	E 1
Flange DN 250 PN 64 Form C, DIN 2501/316/316L	E 2
Flange DN 50 PN 40 Form B1, EN 1092-1/1.4435	E 3
Flange DN 50 PN 40 Form B1, EN 1092-1/316/316L	E 4
Flange DN 50 PN 40 Form B1, EN 1092-1/316/316L, with Alloy C22 (2.4602) coating	E 5
Flange DN 50 PN 40 Form B2, EN 1092-1/316/316L	E 6
Flange DN 50 PN 40 Form C, EN 1092-1/316/316L	E 7
Flange DN 50 PN 40 Form D, EN 1092-1/316/316L	E 8

© Siemens 2020

Selection and ordering data

	Article No.
SITRANS LVL200 Vibrating point level switch, high temperature and pressure design Detects level and material in liquids and slurries in extreme environments. Extension options to 3 m (9.84 ft).	**7ML5748-** ■■■■■ - ■■■■
Flange DN 50 PN 40 Form E, EN 1092-1/316/316L	**F 0**
Flange DN 50 PN 63 Form B2, EN 1092-1/316/316L	**F 1**
Flange DN 50 PN 63 Form B2, EN 1092-1/316/316L, with Alloy C22 (2.4602) coating	**F 2**
Flange DN 50 PN 63 Form C, EN 1092-1/316/316L	**F 3**
Flange DN 50 PN 63 Form D, EN 1092-1/316/316L	**F 4**
Flange DN 50 PN 100 Form B1, EN 1092-01/316/316L	**F 5**
Flange DN 50 PN 100 Form C, EN 1092-1/316/316L	**F 6**
Flange DN 50 PN 160 Form B1, EN 1092-1/316/316L	**F 7**
Flange DN 50 PN 160 Form B2, EN 1092-1/316/316L	**F 8**
Flange DN 50 PN 250 Form B1, EN 1092-1/316/316L	**G 0**
Flange DN 50 PN 250 Form B2, EN 1092-1/316/316L	**G 1**
Flange DN 65 PN 40 Form B1, EN 1092-1/316/316L	**G 2**
Flange DN 65 PN 63 Form C, EN 1092-1/316/316L	**G 3**
Flange DN 80 PN 40 Form B1, EN 1092-1/316/316L	**G 4**
Flange DN 80 PN 40 Form B2, EN 1092-1/316/316L	**G 5**
Flange DN 80 PN 40 Form C, EN 1092-1/316/316L	**G 6**
Flange DN 80 PN 40 Form D, EN 1092-1/316/316L	**G 7**
Flange DN 80 PN 63 Form B2, EN 1092-1/316/316L	**G 8**
Flange DN 80 PN 160 Form B2, EN 1092-1/316/316L	**H 0**
Flange DN 80 PN 250 Form B1, EN 1092-1/316/316L	**H 1**
Flange DN 100 PN 16 Form D, EN 1092-1/316/316L	**H 2**
Flange DN 100 PN 40 Form B1, EN 1092-1/316/316L	**H 3**
Flange DN 100 PN 40 Form B2, EN 1092-1/316/316L	**H 4**
Flange DN 100 PN 40 Form C, EN 1092-1/316/316L	**H 5**
Flange DN 100 PN 40 Form D, EN 1092-1/316/316L	**H 6**
Flange DN 100 PN 160 Form B2, EN 1092-1/316/316L	**H 7**
Flange DN 125 PN 63 Form C, EN 1092-1/316/316L	**H 8**
Flange DN 125 PN 160 Form B2, EN 1092-1/316/316L	**K 0**
Flange DN 150 PN 40 Form B1, EN 1092-1/316/316L	**K 1**
Flange DN 150 PN 40 Form C, EN 1092-1/316/316L	**K 2**
Flange DN 150 PN 40 Form D, EN 1092-1/316/316L	**K 3**
Flange DN 40 PN 100, GOST 12815-80.7/316/316L	**K 4**
Flange DN 50 PN 100, GOST 12815-80.7/316/316L	**K 5**
Flange DN 80 PN 100, GOST 12815-80.7/316/316L	**K 6**
Flange DN 100 PN 100, GOST 12815-80.7/316/316L	**K 7**

	Article No.
SITRANS LVL200 Vibrating point level switch, high temperature and pressure design Detects level and material in liquids and slurries in extreme environments. Extension options to 3 m (9.84 ft).	**7ML5748-** ■■■■■ - ■■■■
Flange 1½" 150 lb RJF, ASME B16.5/316/316L	**K 8**
Flange 1½" 300 lb RJF, ASME B16.5/316/316L	**L 1**
Flange 1½" 1 500 lb RJF, ASME B16.5/316/316L	**L 2**
Flange 2" 150 lb RF, ASME B16.5/316/316L	**L 3**
Flange 2" 150 lb RF, ASME B16.5/Alloy C22 (2.4602) solid	**L 4**
Flange 2" 300 lb RF, ASME B16.5/316/316L	**L 5**
Flange 2" 300 lb RF, ASME B16.5/Alloy C22 (2.4602) solid	**L 6**
Flange 2" 300 lb RF, ASME B16.5/316/316L, with Alloy C22 (2.4602) coating	**L 7**
Flange 2" 300 lb ST (small tongue), ASME B16.5/316/316L	**L 8**
Flange 2" 300 lb RJF, ASME B16.5/316/316L	**M 1**
Flange 2" 300 lb LM (large male), ASME B16.5/316/316L	**M 2**
Flange 2" 300 lb SG, ASME B16.5/316/316L	**M 3**
Flange 2" 300 lb LG, ASME B16.5/316/316L	**M 4**
Flange 2" 600 lb RF, ASME B16.5/316/316L	**M 5**
Flange 2" 600 lb RF, ASME B16.5/316/316L, with Alloy C22 (2.4602) coating	**M 6**
Flange 2" 600 lb RJF, ASME B16.5/316/316L	**M 7**
Flange 2" 900 lb RF, ASME B16.5/316/316L	**M 8**
Flange 2" 900 lb RJF, ASME B16.5/316/316L	**N 1**
Flange 2" 1 500 lb RF, ASME B16.5/316/16L	**N 2**
Flange 2" 1 500 lb RJF, ASME B16.5/316/316L	**N 3**
Flange 2" 1 500 lb LT, ASME B16.5/Alloy C22 (2.4602) solid	**N 4**
Flange 2" 1 500 lb LM, ASME B16.5/316/316L	**N 5**
Flange 2" 2 500 lb RJF, ASME B16.5/316/316L	**N 6**
Flange 2½" 150 lb RF, ASME B16.5/316/316L	**N 7**
Flange 2½" 300 lb RF, ASME B16.5/316/316L	**N 8**
Flange 2½" 600 lb RF, ASME B16.5/316/316L	**P 1**
Flange 2½" 900 lb RF, ASME B16.5/316/316L	**P 2**
Flange 2½" 2 500 lb RJF, ASME B16.5/316/316L	**P 3**
Flange 3" 150 lb RF, ASME B16.5/316/316L	**P 4**
Flange 3" 150 lb RF, ASME B16.5/Alloy C22 (2.4602) solid	**P 5**
Flange 3" 300 lb RF, ASME B16.5/316/316L	**P 6**
Flange 3" 300 lb RJF, ASME B16.5/316/316L	**P 7**
Flange 3" 300 lb LT, ASME B16.5/316/316L	**P 8**
Flange 3" 600 lb RF, ASME B16.5/316/316L	**R 1**
Flange 3" 600 lb RF, ASME B16.5/Alloy C22 (2.4602) solid	**R 2**
Flange 3" 600 lb RF, ASME B16.5/316/316L, with Alloy C22 (2.4602) coating	**R 3**
Flange 3" 600 lb RJF, ASME B16.5/316/316L	**R 4**
Flange 3" 900 lb RF, ASME B16.5/316/316L	**R 5**
Flange 3" 900 lb RJF, ASME B16.5/316/316L	**R 6**
Flange 3" 1 500 lb RF, ASME B16.5/316/316L	**R 7**
Flange 3" 1 500 lb RJF, ASME B16.5/316/316L	**R 8**
Flange 3" 2 500 lb RF, ASME B16.5/316/316L	**S 1**
Flange 3" 2 500 lb RJF, ASME B16.5/316/316L	**S 2**
Flange 4" 150 lb RF, ASME B16.5/316/316L	**S 3**
Flange 4" 150 lb RF, ASME B16.5/Alloy C22 (2.4602) solid	**S 4**
Flange 4" 150 lb RJF, ASME B16.5/316/316L	**S 5**
Flange 4" 300 lb RF, ASME B16.5/316/316L	**S 6**
Flange 4" 300 lb RF, ASME B16.5/Alloy C22 (2.4602) solid	**S 7**

© Siemens 2020

Selection and ordering data

	Article No.
SITRANS LVL200 Vibrating point level switch, high temperature and pressure design	**7ML5748-** ■■■■■ - ■■■■
Detects level and material in liquids and slurries in extreme environments. Extension options to 3 m (9.84 ft).	
Flange 4" 300 lb LT, ASME B16.5/316/316L	**S 8**
Flange 4" 600 lb RF, ASME B16.5/316/316L	**T 1**
Flange 4" 600 lb RF, ASME B16.5/Alloy C22 (2.4602) solid	**T 2**
Flange 4" 600 lb RJF, ASME B16.5/316/316L	**T 3**
Flange 4" 900 lb RF, ASME B16.5/316/316L	**T 4**
Flange 4" 900 lb RJF, ASME B16.5/316/316L	**T 5**
Flange 4" 900 lb LT, ASME B16.5/316/316L	**T 6**
Flange 4" 1 500 lb RF, ASME B16.5/316/316L	**T 7**
Flange 4" 1 500 lb RJF, ASME B16.5/316/316L	**T 8**
Flange 4" 1 500 lb LT, ASME B16.5/316/316L	**U 1**
Flange 5" 150 lb RF, ASME B16.5/316/316L	**U 2**
Flange 5" 300 lb RF, ASME B16.5/316/316L	**U 3**
Flange 5" 600 lb RJF, ASME B16.5/316/316L	**U 4**
Flange 6" 150 lb RF, ASME B16.5/316/316L	**U 5**
Flange 6" 300 lb RF, ASME B16.5/316/316L	**U 6**
Flange 6" 300 lb LT, ASME B16.5/316/316L	**U 7**
Flange DN 50 30K RF, JIS/316/316L	**U 8**
Flange DN 50 40K RF, JIS/316/316L	**V 1**
Flange DN 65 40 K RF, JIS/316/316L	**V 2**
Mobrey flange PN 16 Form A/316/316L	**V 3**
Mobrey flange PN 16 Form E/316/316L	**V 4**
Thread R1 PN 160, EN 10226-1/Inconel 718 (2.4668)	**W 1**
Thread R1 PN 100, EN 10226-1/316L	**W 2**
Gas-tight seal/Process temperature	
With gas-tight seal/-196 ... +450 °C (-321 ... +842 °F)	**1**
Without/-196 ... +450 °C (-321 ... +842 °F)	**2**
Electronics	
Relay (2 x SPDT) 20 .. 72 V DC/20 ... 253 V AC (5A)	**1**
Transistor (NPN/PNP) 9.6 ... 55 V DC	**2**
Two-wire (8/16 mA) 9.6 ... 35 V DC	**3**
Relay (2 x SPDT) 20 ... 72 V DC/20 ... 253 V AC (5A), with SIL qualification	**4**
Transistor (NPN/PNP) 9.6 ... 55 V DC, with SIL qualification	**5**
Two-wire (8/16 mA) 9.6 ... 35 V DC, with SIL qualification	**6**

	Article No.
SITRANS LVL200 Vibrating point level switch, high temperature and pressure design	**7ML5748-** ■■■■■ - ■■■■
Detects level and material in liquids and slurries in extreme environments. Extension options to 3 m (9.84 ft).	
Housing/Cable entry	
Plastic single chamber/IP66/IP67/M20 x 1.5 gland PA black (ø5 ... 9 mm)	**A**
Plastic single chamber/IP66/IP67/½" NPT gland PA black (ø5 ... 9 mm)	**B**
Aluminum IP66/IP67/M20 x 1.5 gland PA black (ø5 ... 9 mm)	**C**
Aluminum IP66/IP67/½" NPT gland PA black (ø5 ... 9 mm)	**D**
Stainless steel single chamber (precision casting)/ IP66/IP67/M20 x 1.5	**E**
Stainless steel single chamber (precision casting)/ IP66/IP67/½" NPT gland PA black (ø5 ... 9 mm)	**F**
Stainless steel single chamber (electropolished)/ IP66/IP67/M20 x 1.5 gland PA black (ø5 ... 9 mm)	**G**
Stainless steel single chamber (electropolished)/ IP66/IP67/½" NPT gland PA black (ø5 ... 9 mm)	**H**
Aluminium IP66/IP67/M20 x 1.5 blind plug	**J**
Aluminium IP66/IP67/½" NPT blind plug	**K**
Stainless steel single chamber (precision casting)/IP66/IP67/M20 x 1.5 blind plug	**L**
Stainless steel single chamber (precision casting)/ IP66/IP67/½" NPT blind plug	**M**
Stainless steel single chamber (electropolished)/ IP66/IP67/M20 x 1.5 blind plug	**N**
Stainless steel single chamber (electropolished)/ IP66/IP67/½" NPT blind plug	**P**
Rigid Extension 316L	
200 ... 500 mm	**A 0**
501 ... 1 000 mm	**A 1**
1 001 ... 1 500 mm	**A 2**
1 501 ... 2 000 mm	**A 3**
2 001 ... 2 500 mm	**A 4**
2 501 ... 3 000 mm	**A 5**
Rigid Extension Alloy C22	
200 ... 500 mm	**B 0**
501 ... 1 000 mm	**B 1**
1 001 ... 1 500 mm	**B 2**
1 501 ... 2 000 mm	**B 3**
2 001 ... 2 500 mm	**B 4**
2 501 ... 3 000 mm	**B 5**
75 mm compact version	**C 1**

© Siemens 2020

Selection and ordering data

	Order code
Further designs	
Please add "**-Z**" to Article No. and specify Order code(s).	
Cleaning including Certificate(oil, grease, and silicone free).	**W01**
Enter the total insertion length in plain text description.	**Y01**
Identification label (measurement loop) stainless steel.	**Y17**
Identification Label (measurement loop) foil.	**Y18**
Output switching delay (1 ... 60 s)/default is 1 s	**Y36**
NACE0175 to 3.1 Material Certificate for material (EN 10204 NACE MR 0175) Note: not available with some Process connection options.	**D07**
Material Inspection 3.1-Inspection certificate for material (EN 10204)	**C05**
Acceptance test Certificate 2.2 for material (EN 10204)	**C15**
Dye penetration test, results confirmed via a 3.1 certificate/instrument (EN 10204)	**C13**
3.1-Inspection certificate for instrument with test data (EN 10204)	**C25**
Quality and test plan	**C26**
Helium leak test + 3.1 certificate/instrument	**C32**
Spare Parts and Accessories	Article No.
SITRANS SCSC single channel signal conditioner and remote test	**7ML5760-.....-....**
SITRANS TCSC two channel signal conditioner and remote test	**7ML5761-.....-....**
Operating Instructions	
All literature is available to download for free, in a range of languages, at	

http://www.siemens.com/processinstrumentation/documentation

	Article No.
SITRANS SCSC, single channel, signal conditioner ↗	**7ML5760-** ■ ■ **A** ■ **1** - ■ ■ ■ ■
Provides power and relay output for one LVL200 vibrating switch, 8/16 mA electronics design. Provides remote test of any LVL200 device.	
↗ Click on the Article No. for the online configuration in the PIA Life Cycle Portal.	
Approvals	
For Ex-free area	**1 A**
ATEX II (1) G/D [Ex ia Ga/Da] IIC/IIIC, I (M1) [Ex ia Ma] I	**1 D**
ATEX II (1) G/D (Ex ia Ga/Da) IIC/IIIC, I (M1) (Ex ia Ma) I + WHG	**1 E**
IEC [Ex ia Ga] IIC, [Ex ia Da] IIIC, [Ex ia Ma] I	**1 H**
IEC (Ex ia Ga) IIC, (Ex ia Da) IIIC, (Ex ia Ma) I + WHG	**1 J**
Ex-free area (incl. EAC approval)	**2 A**
SIL qualification	
Without	**1**
With	**2**
Version	
Single-channel (8/16 mA) for level detection	**1**
Single channel (8/16 mA), level detection with fail safe relay	**2**
Housing/cable entry	
Plastic/IP20	**A**
Terminal block connection	
Detachable 2.5 mm²/ Ex sensor: 2 x blue; output and operating voltage: 2 x black	**A**
Detachable 2.5 mm²/ sensor: 2 x black; output and operating voltage: 2 x black	**B**
Language	
English	**0**
German	**1**
Operating Instructions	
All literature is available to download for free, in a range of languages, at	

http://www.siemens.com/processinstrumentation/documentation

1) Not available with Process Connection options A0 and A2.
2) Available only with Rigid extension option C1.
3) Available only with 316L Process Connection and Rigid extension options.
4) Available only with Alloy C22 Rigid extension options.
5) Available only with Electronic options 3 and 6.
6) Available only with Housing/Cable entry options J, K, L, M.
7) Available only with Electronic option 6.
8) Available only with Electronic options 1, 2, and 4.
9) Available only with Gas tight seal/Process temperature option 1.
10) Not available with Housing/Cable entry options G, H, N, P.
11) Available only with Housing/Cable entry options J, K, L, M, N, P.
12) Not available with Housing/Cable entry options A and B.
13) Not available with Housing/Cable entry options A, B, G, H, N, P.

© Siemens 2020

Selection and ordering data

	Article No.
SITRANS TCSC, dual channel, signal conditioner ↗	**7ML5761-** ■ ■ **A** ■ **1** - ■ ■ ■ ■
Provides power and relay output for two LVL200 vibrating switch, 8/16 mA electronics design. Provides remote test of any LVL200 device.	
↗ Click on the Article No. for the online configuration in the PIA Life Cycle Portal.	
Approvals	
For Ex-free area[1]	**1 A**
ATEX II (1) G/D [Ex ia Ga/Da] IIC/IIIC, I (M1) [Ex ia Ma] I[2]	**1 D**
ATEX II (1) G/D (Ex ia Ga/Da) IIC/IIIC, I (M1) (Ex ia Ma) I + WHG	**1 E**
IEC [Ex ia Ga] IIC, [Ex ia Da] IIIC, [Ex ia Ma] I[2]	**1 H**
IEC (Ex ia Ga) IIC, (Ex ia Da) IIIC, (Ex ia Ma) I + WHG	**1 J**
Ex-free area (incl. EAC approval)	**2 A**
SIL qualification	
Without	**1**
With	**2**

	Article No.
SITRANS TCSC, dual channel, signal conditioner	**7ML5761-** ■ ■ **A** ■ **1** - ■ ■ ■ ■
Provides power and relay output for two LVL200 vibrating switch, 8/16 mA electronics design. Provides remote test of any LVL200 device.	
Version	
Double-channel (8/16 mA) for level detection	**1**
Housing/cable entry	
Plastic/IP20	**A**
Terminal block connection	
Detachable 2.5 mm²/ Ex sensor: 2 x blue; output and operating voltage: 2 x black	**A**
Detachable 2.5 mm²/ sensor: 2 x black; output and operating voltage: 2 x black	**B**
Language	
English	**0**
German	**1**
Operating Instructions	
All literature is available to download for free, in a range of languages, at	

http://www.siemens.com/processinstrumentation/documentation

[1] Available only with terminal block connection option B.
[2] Available only with terminal block connection option A.

Options

LVL200 threaded welded socket

G¾" A/316L

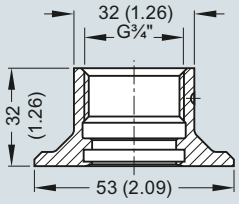

G1" A/316L

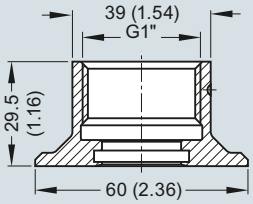

Lock fitting

LVL200 extended 64 bar

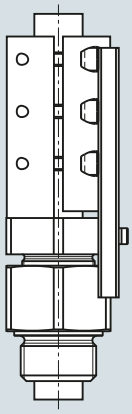

LVL200 extended 16 bar

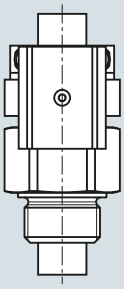

LVL200 extended unpressurized

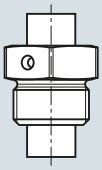

SITRANS LVL200 welded socket and lock fitting, dimensions in mm (inch)

© Siemens 2020

Options (continued)

SITRANS SCSC and TCSC LVL test conditioner

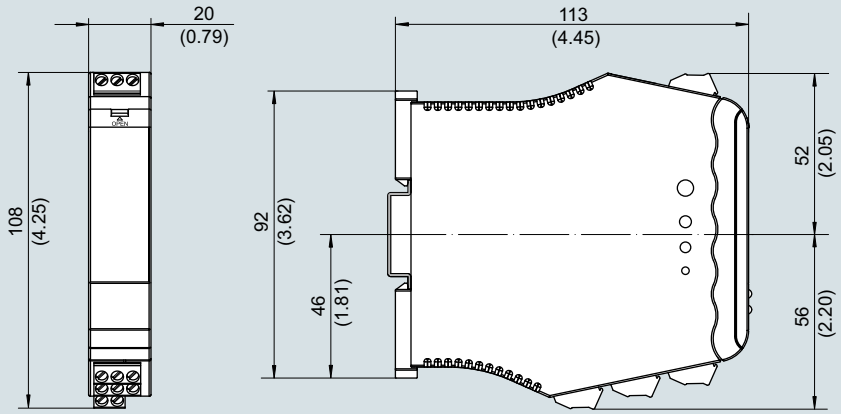

SITRANS SCSC and SITRANS TCSC LVL Test Conditioners, dimensions in mm (inch)

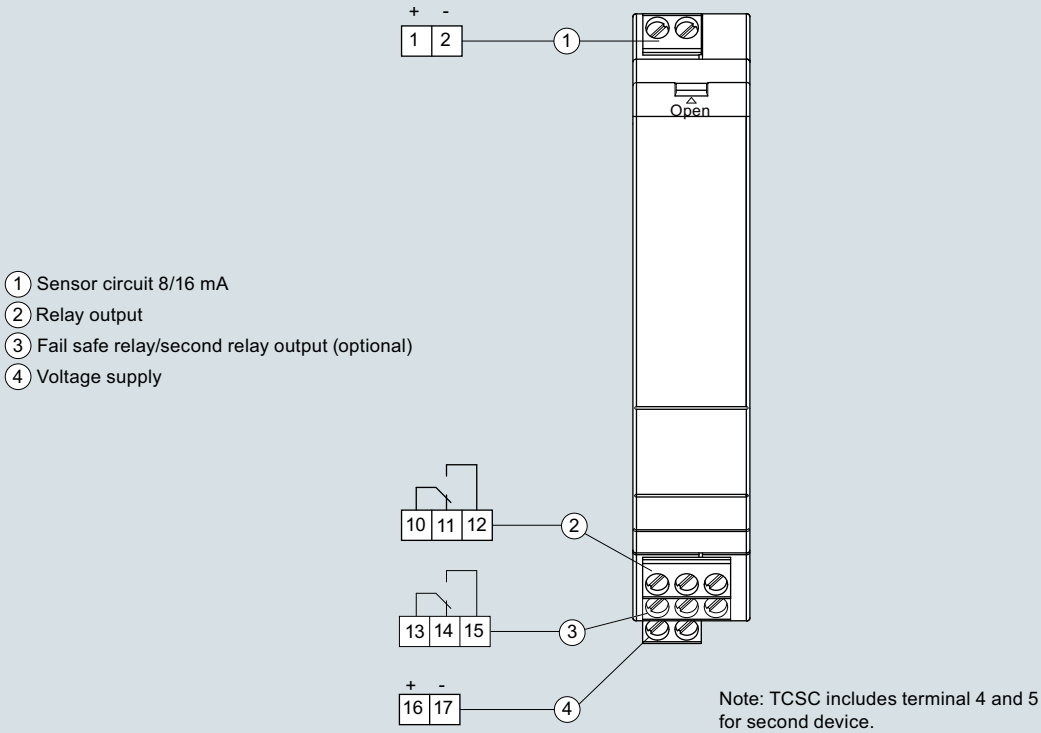

SITRANS SCSC and SITRANS TCSC LVL Test Conditioner connections

© Siemens 2020

Characteristic curves

Ambient/Process temperature

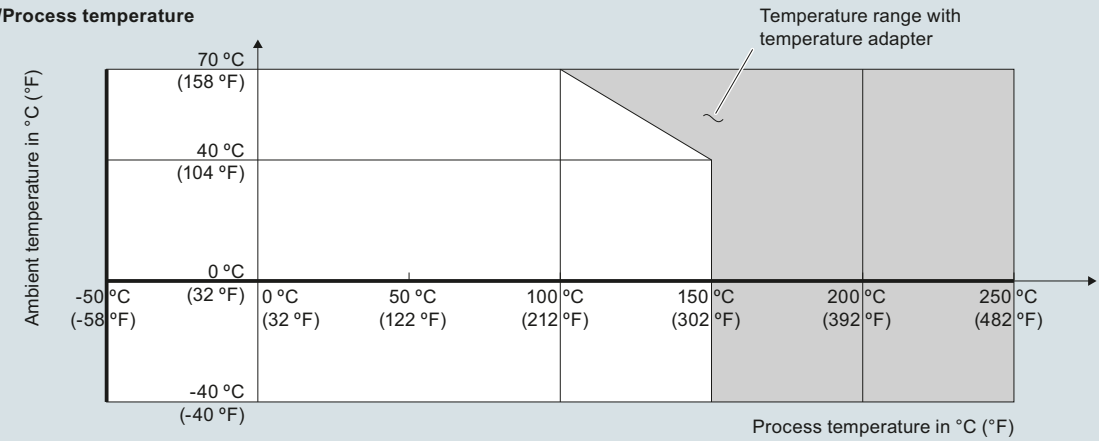

Process pressure with switch position 0.7 g/cm³ (mode switch)

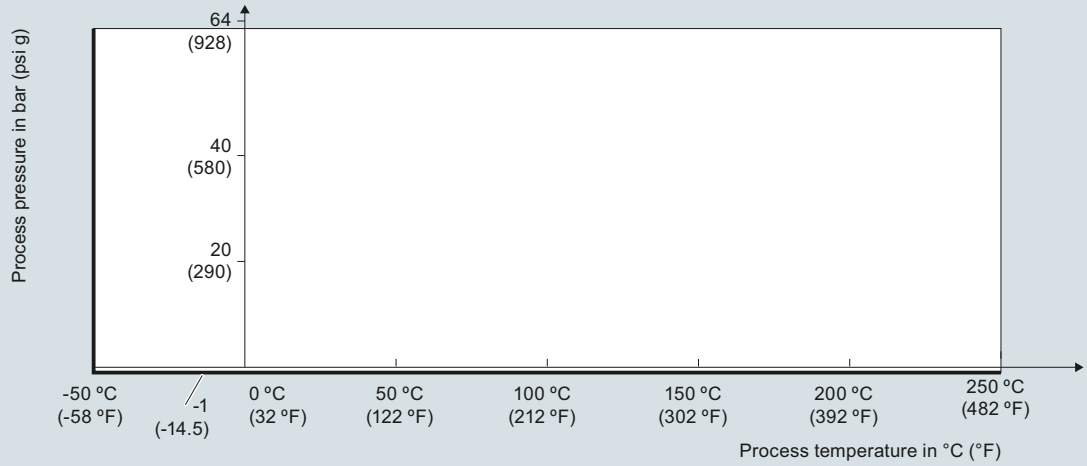

Process pressure with switch position 0.5 g/cm³ (mode switch)

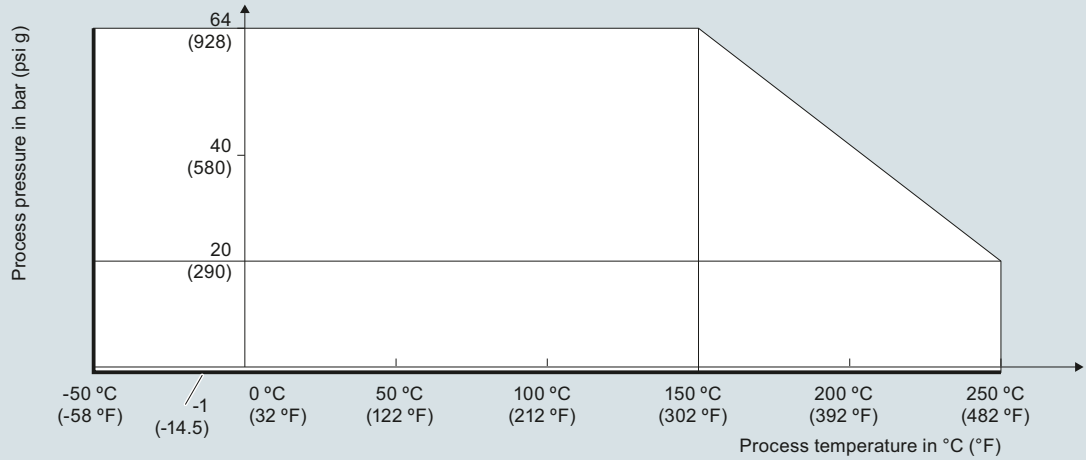

SITRANS LVL200 process pressure/process temperature/ambient temperature derating curves

© Siemens 2020

Characteristic curves (continued)

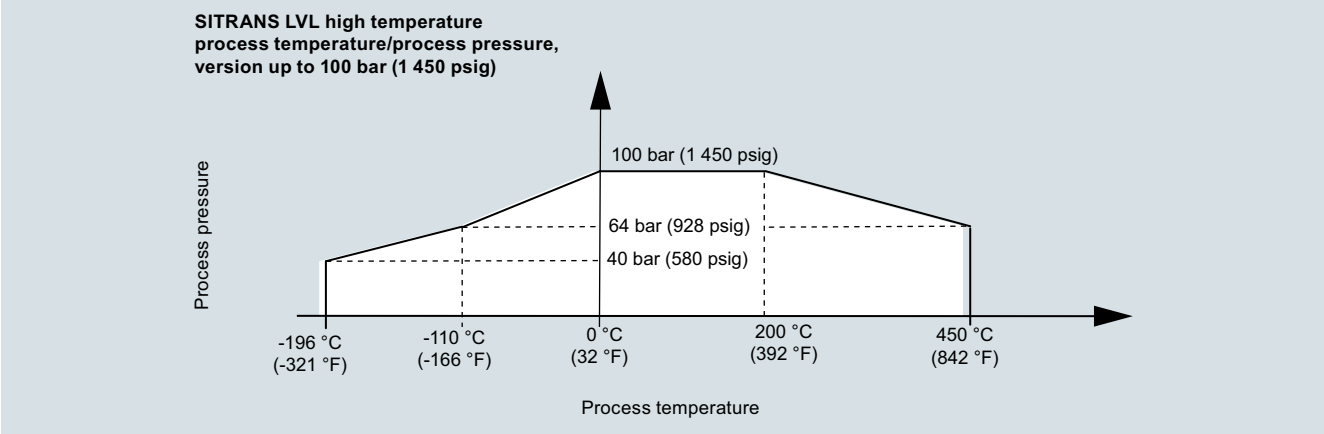

SITRANS LVL200 high temperature process temperature/process pressure curve, version up to 100 bar (1 450 psig)

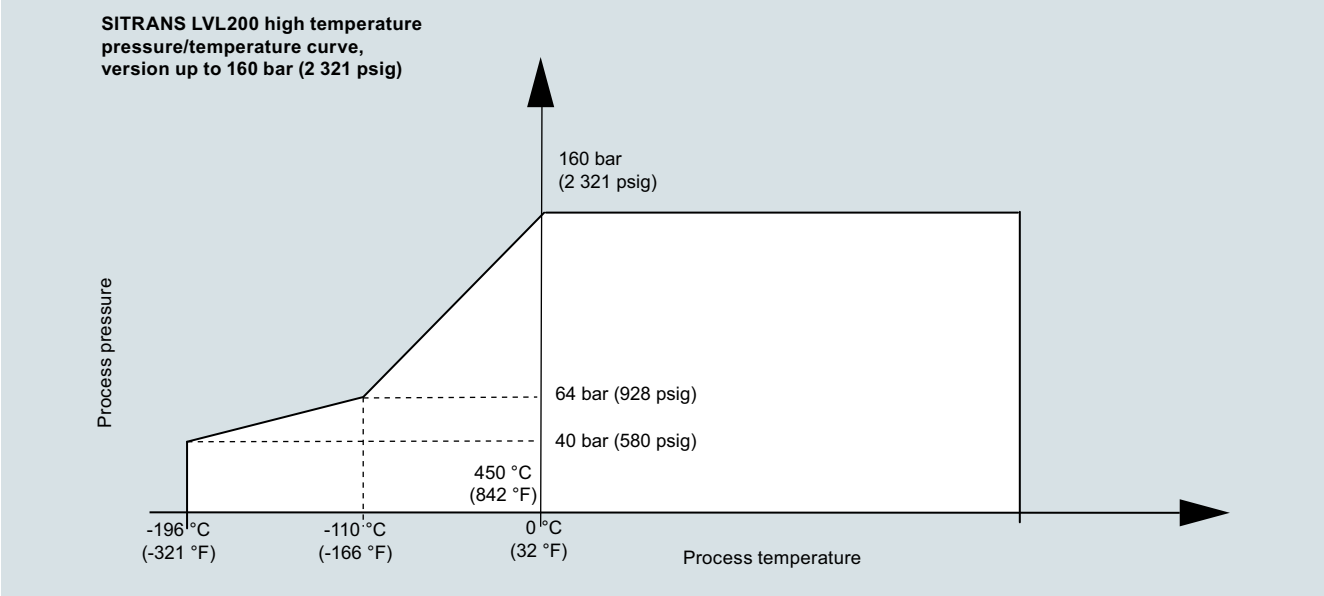

SITRANS LVL200 high temperature pressure/temperature curve, version up to 160 bar (2 321 psig)

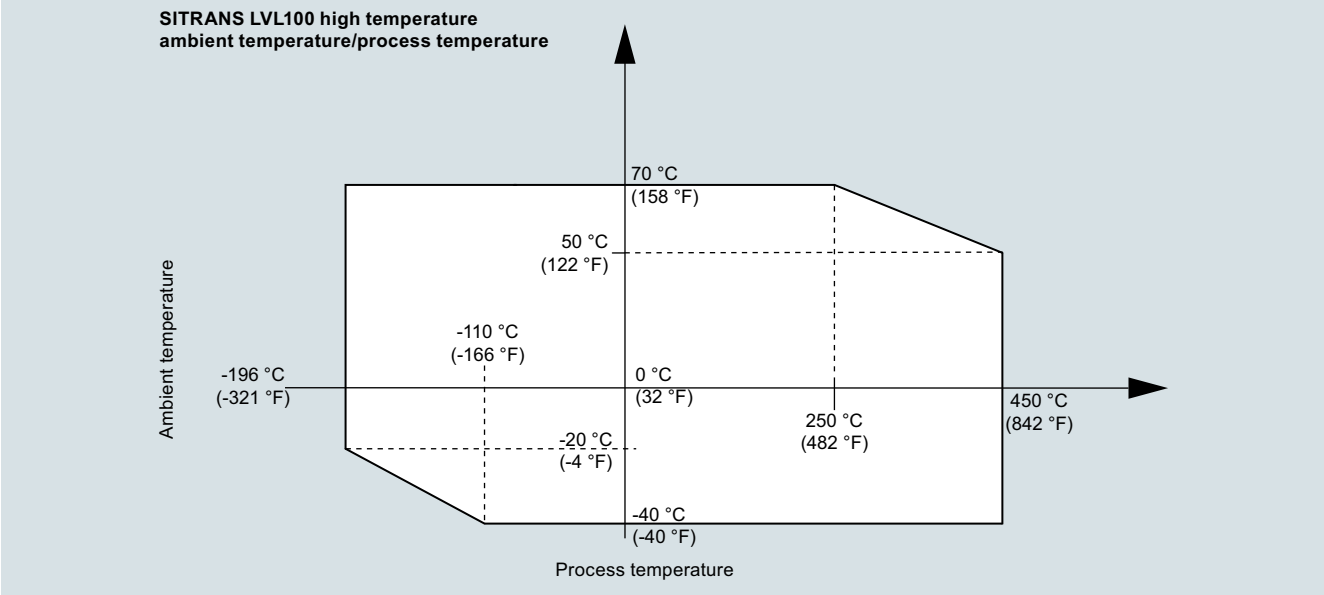

SITRANS LVL200 high temperature ambient temperature/process temperature

© Siemens 2020

Dimensional drawings

SITRANS LVL200, housing

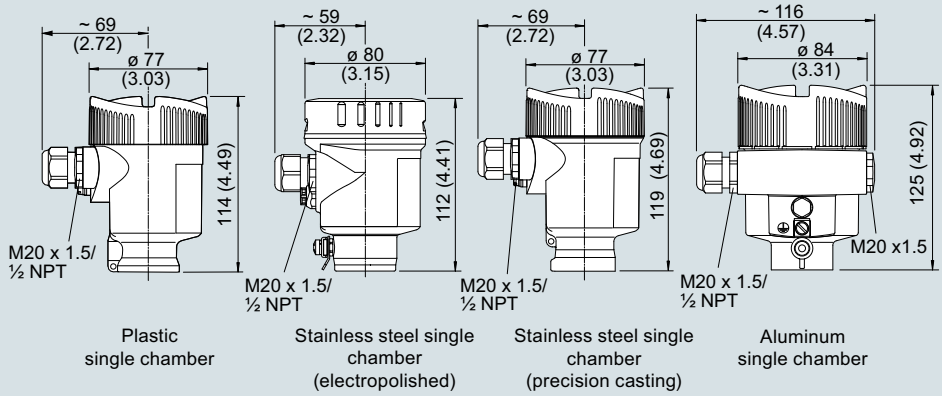

SITRANS LVL200 housing, dimensions in mm (inch)

SITRANS LVL200 standard

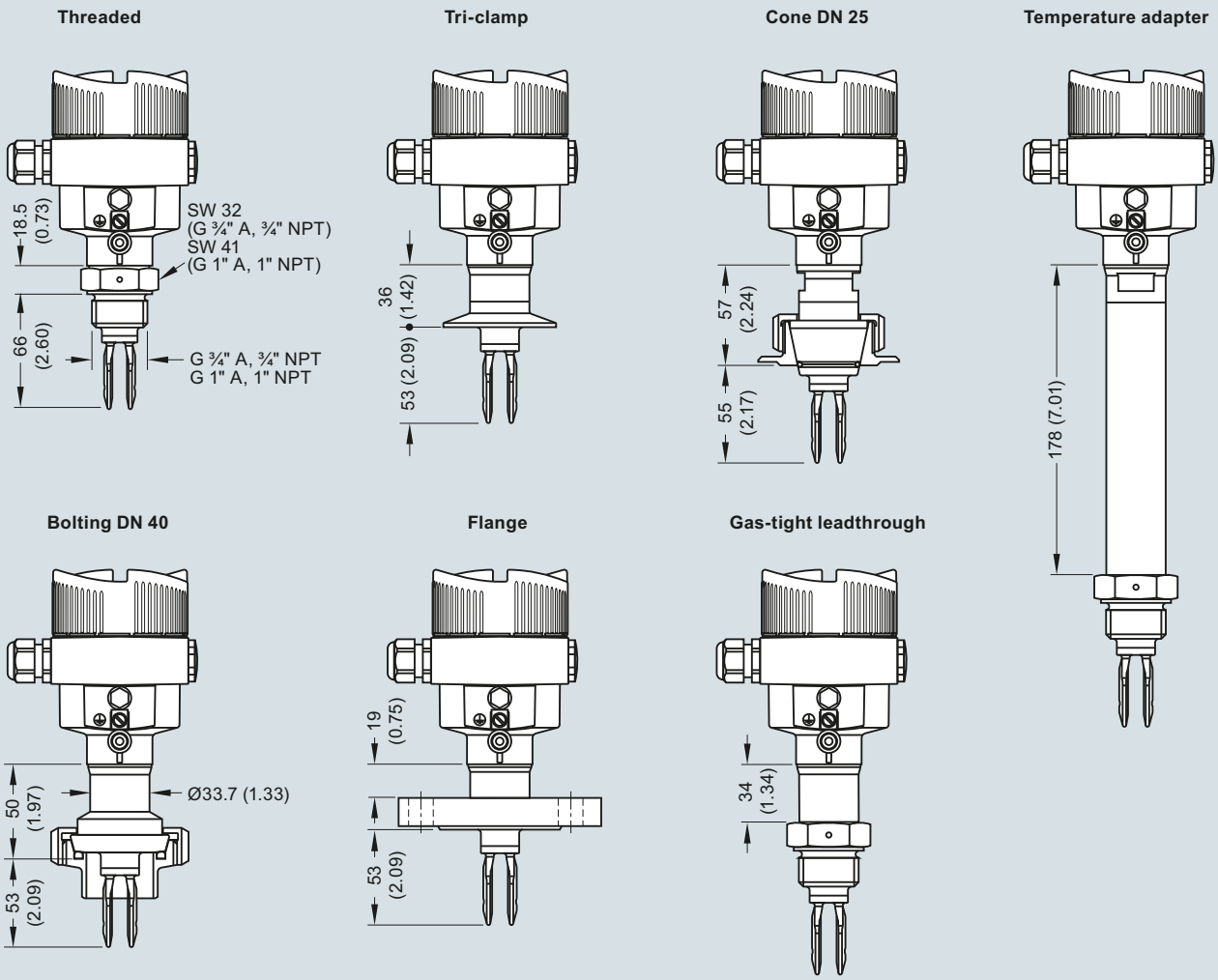

SITRANS LVL200 (standard), dimensions in mm (inch)

© Siemens 2020

Dimensional drawings (continued)

SITRANS LVL200 extended

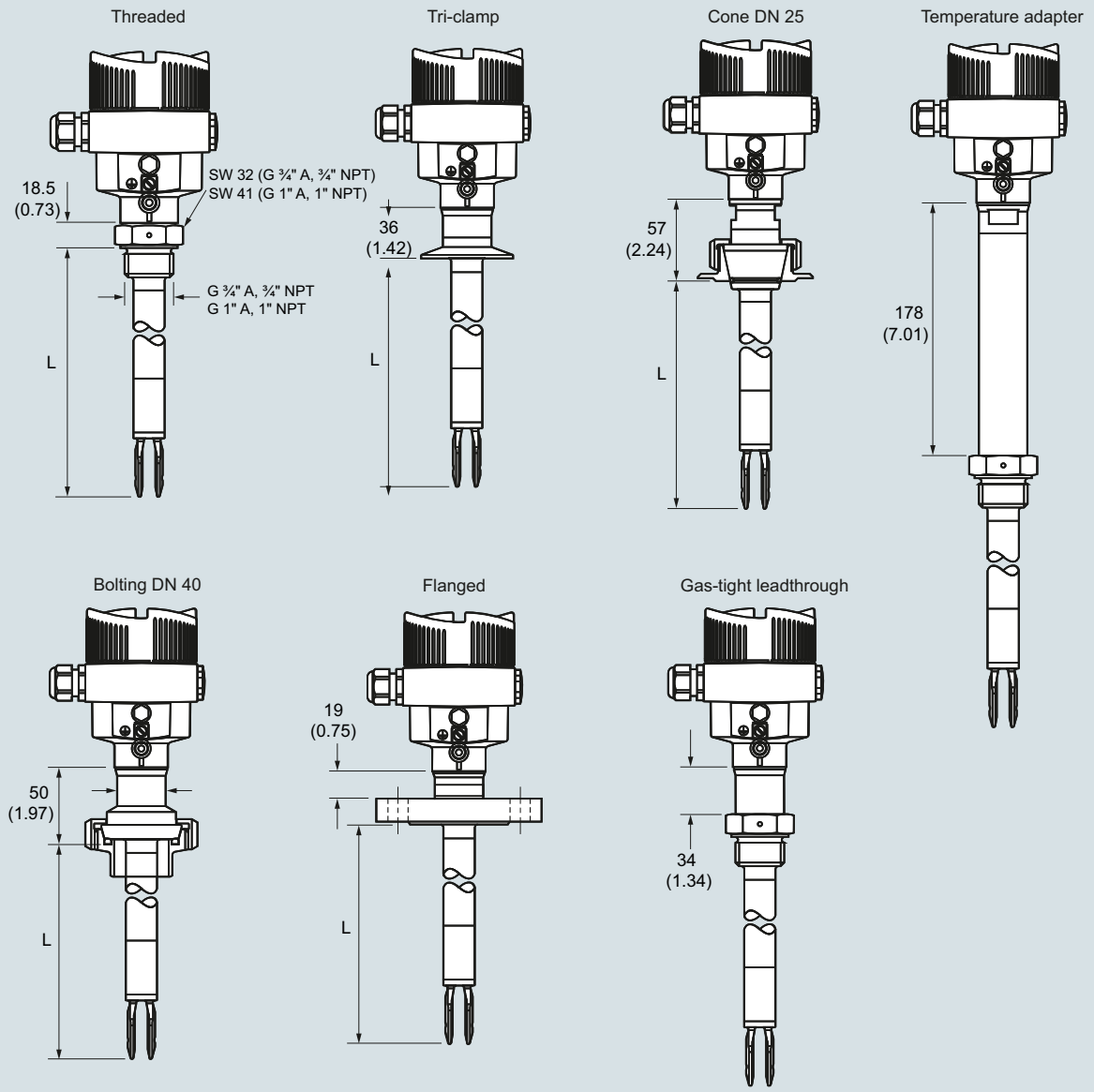

Sensor length (L)

316L, Alloy C22 (2.4602)	80 ... 6 000 mm (3.15 ... 236.2 inch)
Enamelled	80 ... 1 500 mm (3.15 ... 59.06 inch)
316L, ECTFE coated	80 ... 3 000 mm (3.15 ... 118.1 inch)
316L, PFA coated	80 ... 4 000 mm (3.15 ... 157.5 inch)

SITRANS LVL200 (extended), dimensions in mm (inch)

© Siemens 2020

Dimensional drawings (continued)

SITRANS LVL200 high temperature, compact version

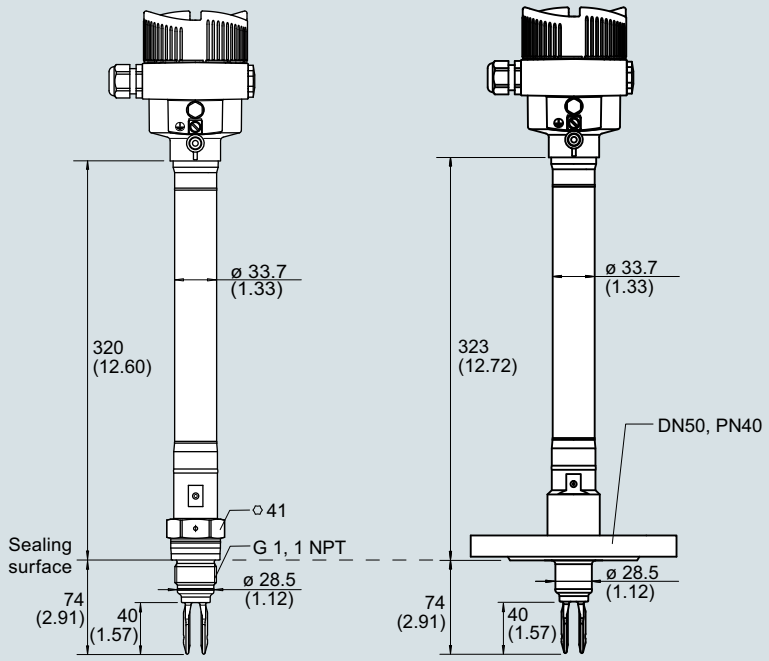

SITRANS LVL200 high temperature, compact version, dimensions in mm (inch)

© Siemens 2020

Dimensional drawings (continued)

SITRANS LVL200 high temperature, tube version

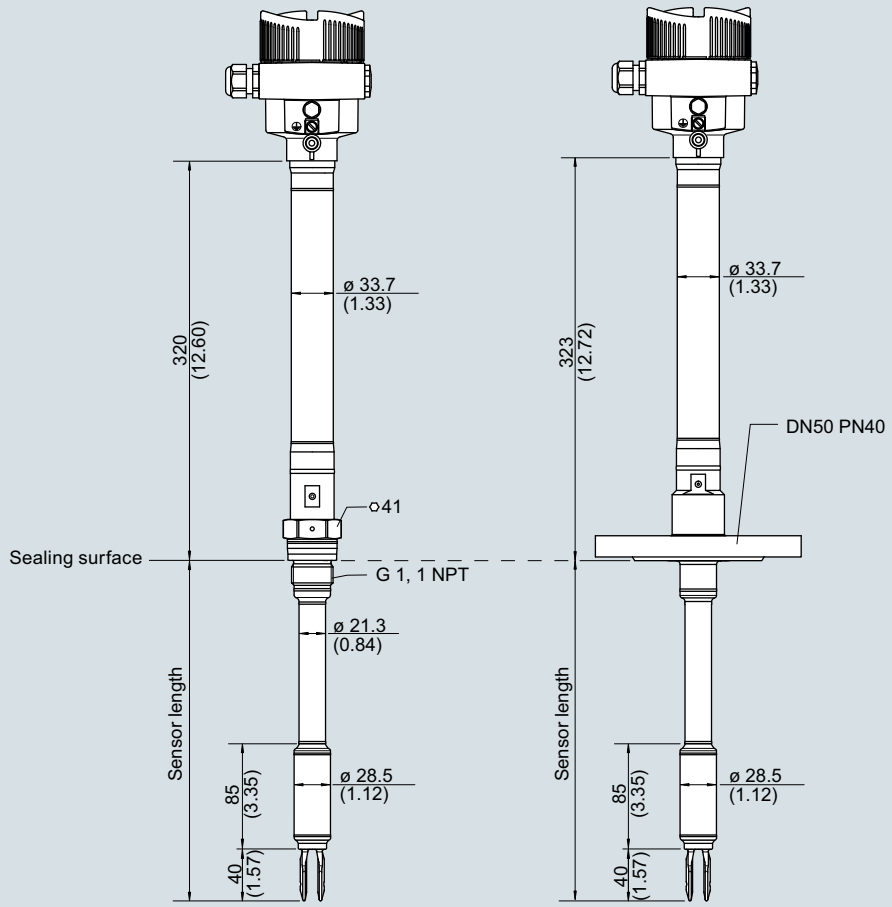

SITRANS LVL200 high temperature, tube version, dimensions in mm (inch)

© Siemens 2020

Circuit diagrams

SITRANS LVL200S, LVL200E Relay (DPDT)

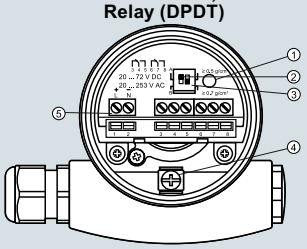

1	Control lamp
2	DIL switch for characteristics reversal
3	DIL switch for sensitivity adjustment
4	Ground terminal
5	Connection terminals

SITRANS LVL200H Relay (DPDT)

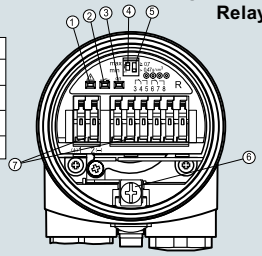

1	Control lamp - fault indication (red)
2	Control lamp - Switching status (yellow)
3	Control lamp - Operating status (green)
4	Mode switch for selecting the switching behaviour (min./max.)
5	DIL switch for sensitivity adjustment
6	Ground terminal
7	Connection terminals

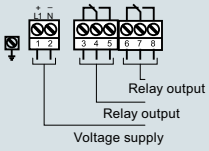

Contactless

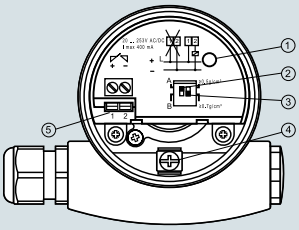

1	Control lamp
2	DIL switch for mode adjustment
3	DIL switch for switching point adaptation
4	Ground terminal
5	Connection terminals

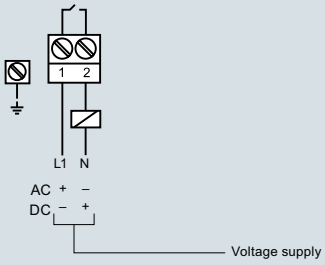

NAMUR

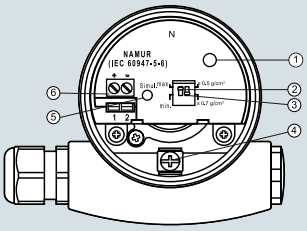

1	Control lamp
2	DIL switch for characteristics reversal
3	DIL switch for sensitivity adjustment
4	Ground terminal
5	Simulation key
6	Connection terminals

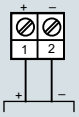

Amplifier according to NAMUR
IEC 60947-5-6, approx. 8.2 V

SITRANS LVL200S, LVL200E Transistor (NPN/PNP)

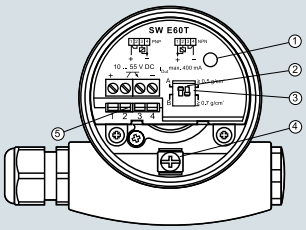

1	Control lamp
2	DIL switch for mode adjustment
3	DIL switch for switching point
4	Ground terminal
5	Connection terminals

SITRANS LVL200H, Transistor (NPN/PNP)

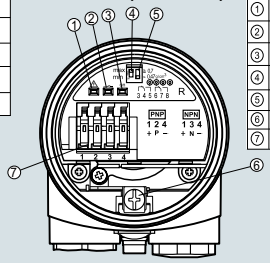

1	Control lamp - fault indication (red)
2	Control lamp - Switching status (yellow)
3	Control lamp - Operating status (green)
4	Mode switch for selecting the switching behaviour (min./max.)
5	DIL switch for sensitivity adjustment
6	Ground terminal
7	Connection terminals

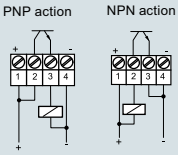

SITRANS LVL200S, LVL200E 8/16 mA

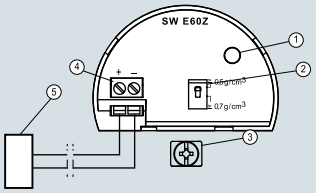

1	Control lamp
2	DIL switch for sensitivity adjustment
3	Ground terminal
4	Connection terminals
5	Processing system or PLC

SITRANS LVL200H 8/16 mA

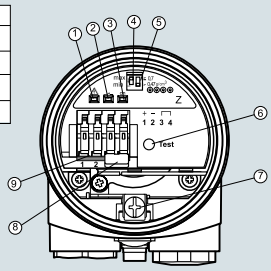

1	Control lamp - fault indication (red)
2	Control lamp - switching status (yellow)
3	Control lamp - operating status (green)
4	Mode switch for selecting the switching behavior (min./max.)
5	DIL switch for sensitivity behavior (min./max.)
6	Test key
7	Ground terminal
8	Connector block
9	Connection terminals

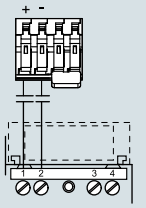

SITRANS LVL200 connections

© Siemens 2020

Overview

SITRANS LVS100 is a vibrating point level switch for material detection in bulk solids.

Benefits

- High resistance to mechanical forces
- Sliding sleeve options for adjustable insertion length and ease of cleaning
- Rotatable enclosure for ease of installation and wiring
- Suitable for point level detection of materials starting at a bulk density of 30 g/l (1.9 lb/ft^3)
- Customer desired extensions up to 4 000 mm (157.48 inch)

Application

SITRANS LVS100 detects high, low or demand levels of dry bulk solids in bins, silos or hoppers.

SITRANS LVS100 has a compact design and can be top, side, or angle mounted. The vibrating fork design ensures the tines are kept clean. The unique design of the fork and crystal assembly eliminates false high level readings even if tines become damaged.

A signal from the electronic circuit excites a crystal in the probe causing the fork to vibrate. If the fork is covered by material, the change in vibration is detected by the electronic circuitry which causes the relay to change state after a one second delay. When the fork is free from material pressure, full vibration resumes and the relay reverts to its normal condition.

- Key Applications: dry bulk solids in bins, silos, hoppers

Configuration

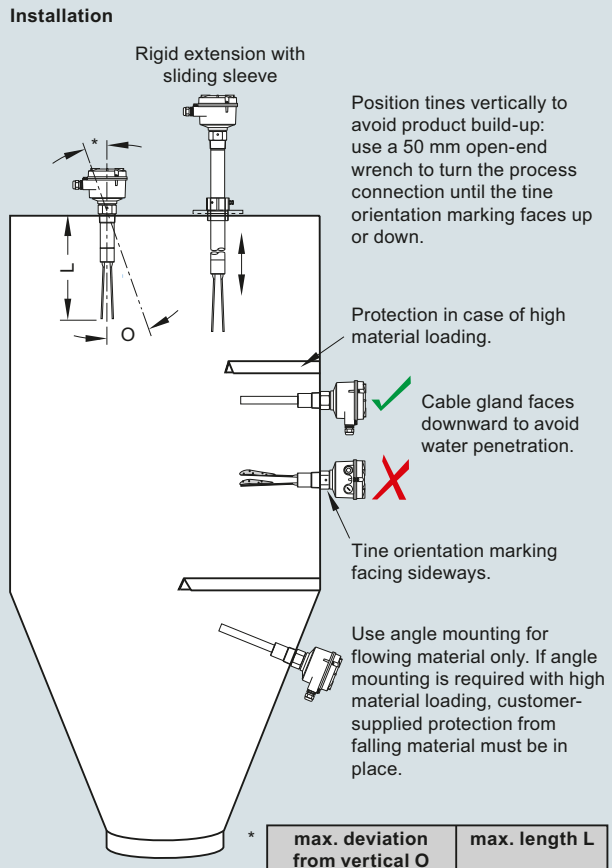

max. deviation from vertical O	max. length L
5°	4.0 m
45°	1.2 m
> 45°	0.6 m

SITRANS LVS100 installation, dimensions in mm (inch)

© Siemens 2020

Technical specifications

Mode of Operation	
Measuring principle	Vibrating point level switch
Input	
Measured variable	High, low and demand
Measuring frequency	200 Hz
Output	
Relays	DPDT relay
Relay delay	From loss of vibration: approximately 1 second
	From resumption of vibration: approximately 1 ... 2 s
Signal delay	Probe uncovered to covered: approximately 1 s
	Probe covered to uncovered: approximately 1 ... 2 s
Relay fail-safe	High or low, switch selectable
Alarm output	Relay 8 A at 250 V AC, non-inductive
	Relay 5 A at 30 V DC, non-inductive
Sensitivity	High or low, switch selectable
Rated operating conditions	
Installation conditions	
• Location	Indoor/outdoor
Ambient conditions	
• Ambient temperature	-40 ... +60 °C (-40 ... +140 °F)
• Storage temperature	-40 ... +80 °C (-40 ... +176 °F)
• Installation category	III
• Pollution degree	2
Medium conditions	
• Process temperature	-40 ... +150 °C (-40 ... +302 °F)
• Max. threaded bushing temperature	80 °C (176 °F)
• Max. enclosure surface temperature (Category 2D)	90 °C (194 °F)
• Max. extension surface temperature (Category 1D)	150 °C (302 °F)
• Pressure (vessel)	Max. 10 bar g (145 psi g) European Pressure Directive 2014/68/EU: Category 1
Minimum material density	Approx. 30 g/l (1.9 lb/ft^3)

Design	
Material	
• Enclosure	Epoxy coated aluminum
Process connection	• Thread 1¼" NPT [(Taper), ANSI/ASME B1.20.1], R 1½" [(BSPT), EN 10226] • Thread R 1½" [(BSPT), EN 10226], ½" NPT [(Taper), ANSI/ASME B1.20.1], sliding sleeve [min. length 500 mm (19.69 inch)] • Thread material: stainless steel 304 (1.4301) or 316L (1.4404) depending on configuration
Tine material	Stainless steel 316L (1.4404)
Degree of protection	IP66/Type 4/NEMA 4
Conduit entry	2 x M20 x 1.5 or 2 x ½" NPT (For FM and CSA approved versions only.)
Weight	Standard version, no extensions: approx. 1.7 kg (3.7 lb)
Power supply	• 19 ... 230 V AC, +10 %, 50 ... 60 Hz, 8 VA • 19 ... 40 V DC, +10 %, 1.5 W
Certificates and approvals	• CSA/FM General Purpose • CE • CSA/FM Dust Ignition Proof • RCM • ATEX II 1/2 D • IECex

© Siemens 2020

Selection and ordering data

	Article No.
SITRANS LVS100 Vibrating fork point level switch ↗	**7ML5735-**
Level and material detection for dry bulk solids. Extension options to 4 m (13.12 ft).	■ ■ ■ ■ ■ - 0 ■ A 0
↗ Click on the Article No. for the online configuration in the PIA Life Cycle Portal.	
Input Voltage	
DPDT Relay: 19 ... 230 V AC, 19 ... 40 V DC	1
DPDT Relay: 19 ... 230 V AC, 19 ... 40 V DC (stocked version)[1)3)]	2
Process temperature	
Up to 150 °C (302 °F)	A
Process connection	
Threaded	
R 1½" [(BSPT), EN 10226]	A
1¼" NPT [(Taper), ANSI/ASME B1.20.1]	B
R 1½" [(BSPT), EN 10226] DIN 2999 thread, sliding sleeve [min. length 500 mm (19.69 inch)][2)]	C
1½" NPT [(Taper), ANSI/ASME B1.20.1] , sliding sleeve [min. length 500 mm (19.69 inch)][2)]	D
Extension length	
Stainless steel 316L (1.4404)	
Standard length, 170 mm (6.69 inch)	1 1
Add Order code Y01 and plain text: "Insertion length ... mm"	
Stainless steel 304 (1.4301)	
230 ... 500 mm (9.05 ... 19.69 inch)	1 2
501 ... 1 000 mm (19.72 ... 39.37 inch)	1 3
1 001 ... 1 500 mm (39.41 ... 59.06 inch)	1 4
1 501 ... 2 000 mm (59.09 ... 78.74 inch)	1 5
2 001 ... 2 500 mm (78.78 ... 98.43 inch)	1 6
2 501 ... 3 000 mm (98.46 ... 118.11 inch)	1 7
3 001 ... 3 500 mm (118.15 ... 137.80 inch)	1 8
3 501 ... 4 000 mm (137.83 ... 157.48 inch)	2 0
Approvals	
CSA/FM General Purpose, CE, RCM	A
CSA/FM Class II, Div. 1, Groups E, F, G, Class III, ATEX II ½ D, RCM	B
IEC-Ex Ex t IIIC T-- Da/Db IP6X	C
EAC Ex ta/tb IIIC Da/Db	D

1) Only available with the following configurations 7ML5735-2AA11-0AA0 or 7ML5735-2AB11-0AA0.

2) Not available with extension length options 11 and 12.

3) Input voltage 2 not allowed with extension length 16, 17, 18 or 20.

	Order code
Further Designs	
Please add "**-Z**" to Art. No. and specify Order code(s).	
Total insertion length: Enter the total insertion length in plain text description, max. (50 mm increments)	**Y01**
Signal bulb inserted in M20 cable gland[1)]	**A20**
Factory test certificate - M to DIN 55350, Part 18	**C11**
Operating Instructions	
All literature is available to download for free, in a range of languages, at	
http://www.siemens.com/processinstrumentation/documentation	
Spare Parts	Article No.
Replacement Electronics Module LVS100 DPDT Relay (19 ... 253 V AC, 19 ... 55 V DC)	**7ML1830-1NS**
R 1½" [(BSPT), EN 10226] DIN 2999 thread, sliding sleeve	**7ML1830-1NT**
1½" NPT [(Taper), ANSI/ASME B1.20.1], sliding sleeve [min. length 500 mm (19.69 inch)]	**7ML1830-1NU**

1) Available only with Approval option A.

© Siemens 2020

Dimensional drawings

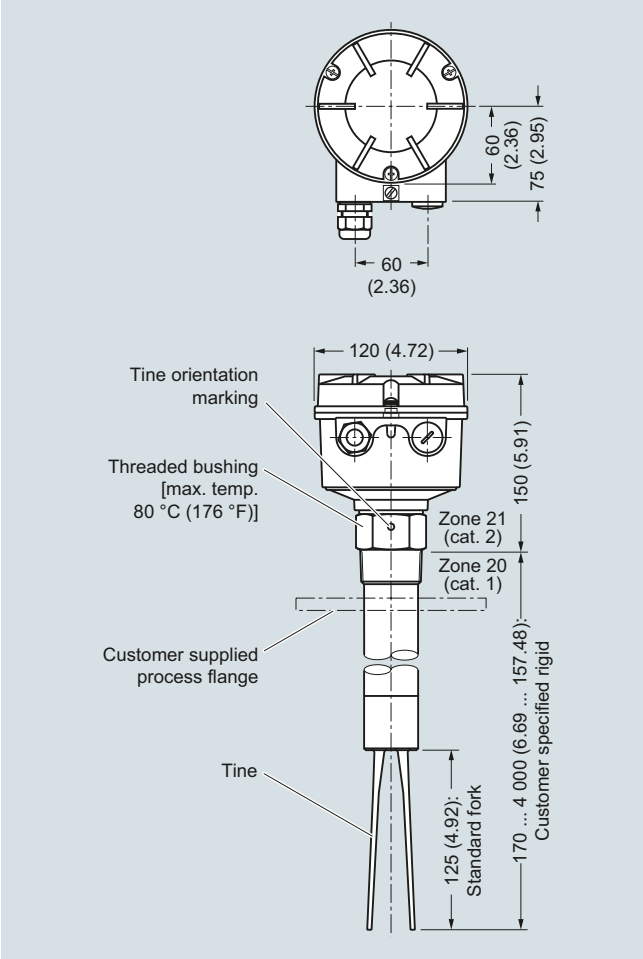

SITRANS LVS100, dimensions in mm (inch)

Circuit diagrams

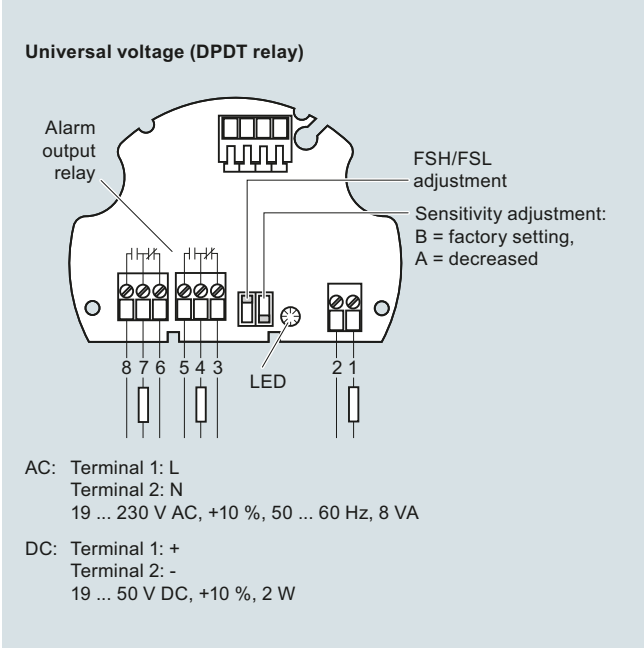

SITRANS LVS100 connections

© Siemens 2020

Overview

SITRANS LVS200 is a vibrating point level switch for high, low, or demand level detection of bulk solids.

Benefits

- High resistance to mechanical forces
- Strong vibration resistance to high bulk material loads
- Rotatable enclosure for convenient wiring
- Suitable for low density material: standard version, 20 g/l (1.3 lb/ft^3); liquid/solid interface version, 50 g/l (3 lb/ft^3) and low density option min. 5 g/l (0.3 lb/ft^3)
- Customer desired extensions up to 20 000 mm (787 inch)
- Optional detection of solids within liquid
- Durable short fork option with 165 mm (6.5 inch) insertion length

Application

The standard LVS200 detects high, low, or demand levels of dry bulk solids in bins, silos, or hoppers. The liquid/solid interface version can also detect settled solids within liquids or solids within confined spaces such as feed pipes. It is designed to ignore liquids in order to detect the interface between a solid and a liquid.

A pipe extension version is available with either the standard or liquid/solid interface electronics and fork, separated by a customer supplied 1 inch pipe.

SITRANS LVS200 has an optional 4 to 20 mA output for monitoring buildup on the fork to determine when preventative maintenance should be performed in sticky applications.

The LVS200 has a compact design and can be top, side or angle mounted. The vibrating fork design ensures the tines are kept clean. The unique design of the fork and crystal assembly eliminates false high level readings even if tines become damaged.

A signal from the electronic circuit excites a crystal in the probe causing the fork to vibrate. If the fork is covered by material, the change in vibration is detected by the electronic circuitry which causes the relay to change state after a one second delay. When the fork is free from material pressure, full vibration resumes and the relay reverts to its normal condition.

- Key Applications: dry bulk solids in bins, silos, hoppers or settled solids within liquids (interface version)

© Siemens 2020

Technical specifications

Mode of operation	
Measuring principle	Vibrating point level switch
Input	
Measured variable	High, low, and demand
Measuring frequency	
• Standard	125 Hz
• Liquid/solid interface and short fork version	350 Hz
Output	
PNP	Open collector: Permanent load max. 0.4 A, short-circuit and overload protected Turn-on voltage: max. 50 V (reverse protection)
2-wire without contact	Load current: • Min. 10 mA • Max. 500 mA permanent • Max. 2A < 200 ms • Max. 5A < 50 ms Voltage drop on the electronic module: max. 7 V with closed electric circuit Cut-off current with open electric circuit: max. 5 mA
Relays	
• Version with 1 relay	SPDT relay
• Version with 2 relays	DPDT relay
Relay delay	• From loss of vibration: approximately 1 second • From resumption of vibration: approximately 1 ... 2 seconds
Signal delay	• Probe uncovered to covered: approximately 1 second • Probe covered to uncovered: approximately 1 ... 2 seconds
Relay fail-safe	High or low, switch selectable
Alarm output	• Relay 8 A at 250 V AC, non-inductive • Relay 5 A at 30 V DC, non-inductive
mA output	8/16 mA or 4 ... 20 mA
• Resolution	4 ... 20 mA ± 0.1 mA
Sensitivity	High or low, switch selectable

Rated operating conditions	
Installation conditions	
• Location	Indoor/outdoor
Ambient conditions	
• Ambient temperature	-40 ... +60 °C (-40 ... +140 °F)
• Storage temperature	-40 ... +80 °C (-40 ... +176 °F)
• Installation category	III
• Pollution degree	2
Medium conditions	
• Process temperature	• All except CSA Class II, Group G: -40 ... +150 °C (-40 ... +302 °F) • CSA Class II, Group G: -40 ... +140 °C (-40 ... +284 °F), CSA temperature code T3B
• Max. threaded bushing temperature	80 °C (176 °F)
• Max. enclosure surface temperature (Category 2D)	90 °C (194 °F)
• Max. extension surface temperature (Category 1D)	150 °C (302 °F)
• Pressure (vessel)	Max. 30 bar g (435 psi g) European Pressure Directive 2014/68/EU: Category 1
• Minimum material density	• Standard version: approx. 20 g/l (1.2 lb/ft^3) • Liquid/solid interface version: approx. 50 g/l (3 lb/ft^3) • Optional low density version: approx. 5 g/l (0.3 lb/ft^3)
Design	
Material	
• Enclosure	Epoxy coated aluminum
Process connection	• Thread 1½" NPT [(Taper), ANSI/ASME B1.20.1], R ½" [(BSPT), EN 10226], and flange options • Optional sliding bushing with 2" NPT [(Taper), ANSI/ASME B1.20.1] or BSP thread • Thread material: stainless steel 303 (1.4301)
Tine material	Stainless steel 316L (1.4404), PTFE-coated tines are available upon special request
Degree of protection	IP65/Type 4/NEMA 4
Conduit entry	2 x M20 x 1.5 or 2 x ½" NPT (For FM and CSA approved versions only.)
Weight	• Standard version, no extensions: approx. 2.0 kg (4.4 lb) • Solids/liquids version, no extensions: approx. 1.9 kg (4.2 lb)
Power supply	• 19 ... 230 V AC, +10 %, 50 ... 60 Hz, 8 VA • 19 ... 55 V DC, +10 %, 1.5 W
Certificates and approvals	
	• CSA/FM General Purpose • CE • CSA/FM Dust Ignition Proof • RCM • ATEX II 1/2 D • CSA/FM IS Class I, II, III Div. 1, Groups A, B, C, D, E, F, G, FM Class I, Aex ia IIC, CSA Class I, Ex ia IIC, available only with power supply options 5 and 6 • ATEX II 1G and 1/2 G Eex ia IIC; ATEX II 1D and 1/2 D, available only with power supply option 5

© Siemens 2020

Selection and ordering data

	Article No.
SITRANS LVS200 Vibrating fork point level switch, standard design ↗	**7ML5731-** ■ ■ ■ ■ ■ - ■ ■ **A 0**
Level and material detection in dry bulk solids. Extension options to 4 m (13.12 ft). With advanced testing, output, and durability options, including low bulk densities.	
↗ Click on the Article No. for the online configuration in the PIA Life Cycle Portal.	
Power supply	
19 ... 230 V AC, 19 ... 55 V DC, one relay output (SPDT)[1]	**1**
19 ... 230 V AC, 19 ... 55 V DC, two relay outputs (DPDT)[1]	**2**
18 ... 50 V DC PNP[1]	**3**
19 ... 230 V AC/DC without contact, 2-wire loop powered[1]	**4**
7 ... 9 V DC (requires NAMUR switch amplifier) NAMUR IEC 60947-5-6, 2-wire[2]	**5**
8/16 mA or 4 ... 20 mA; 12.5 ... 35 V DC, 2-wire[3]	**6**
19 ... 230 V AC, 19 ... 55 V DC, one relay output (SPDT) basic version[4][5]	**7**
Process temperature	
Without temperature isolator	**A**
With temperature isolator	**B**
Separated enclosure - cable length 1.5 m (4.92 ft) [max. temperature process 150 °C (302 °F)/max. temperature electronics 60 °C (140 °F)]	**C**
Separated enclosure - cable length 4.0 m (13.12 ft) [max. temperature process150 °C (302 °F)/max. temperature electronics 60 °C (140 °F)]	**D**
Process connection	
Threaded	
R 1½" [(BSPT), EN 10226]	**A**
1½" NPT [(Taper), ANSI/ASME B1.20.1]	**B**
G 2" [(BSPP), EN ISO 228-1], sliding sleeve [min. length 500 mm (19.69 inch)][6]	**C**
2" NPT [(Taper), ANSI/ASME B1.20.1], sliding sleeve [min. length 500 mm (19.69 inch)][6]	**D**
Flanged	
DN 100 PN 6, EN 1092-1, flat face[7]	**E**
DN 100 PN 16, EN 1092-1, flat face	**F**
2" ASME 150 lb B16.5, raised face	**G**
3" ASME 150 lb B16.5, raised face	**H**
4" ASME 150 lb B16.5, raised face	**J**
2" Tri-clamp (DN 50) ISO 2852	**K**
Extension length	
Stainless steel 304 (1.4301)	
Standard length, 235 mm (9.25 inch)	**1 1**
Add Order code Y01 and plain text: "Insertion length ... mm"	
300 ... 500 mm (11.81 ... 19.69 inch)	**1 2**
501 ... 750 mm (19.72 ... 29.53 inch)	**1 3**
751 ... 1 000 mm (29.57 ... 39.37 inch)	**1 4**
1 001 ... 1 250 mm (39.41 ... 49.21 inch)	**1 5**
1 251 ... 1 500 mm (49.25 ... 59.06 inch)	**1 6**
1 501 ... 1 750 mm (59.09 ... 68.90 inch)	**1 7**
1 751 ... 2 000 mm (68.94 ... 78.74 inch)	**1 8**
2 001 ... 2 250 mm (78.78 ... 88.58 inch)	**2 1**
2 251 ... 2 500 mm (88.62 ... 98.43 inch)	**2 2**
2 501 ... 2 750 mm (98.46 ... 108.27 inch)	**2 3**
2 751 ... 3 000 mm (108.31 ... 118.11 inch)	**2 4**
3 001 ... 3 250 mm (118.15 ... 127.95 inch)	**2 5**
3 251 ... 3 500 mm (127.99 ... 137.80 inch)	**2 6**
3 501 ... 3 750 mm (137.83 ... 147.64 inch)	**2 7**
3 751 ... 4 000 mm (147.68 ... 157.48 inch)	**2 8**

	Article No.
SITRANS LVS200 Vibrating fork point level switch, standard design	**7ML5731-** ■ ■ ■ ■ ■ - ■ ■ **A 0**
Level and material detection in dry bulk solids. Extension options to 4 m (13.12 ft). With advanced testing, output, and durability options, including low bulk densities.	
Stainless steel 316L (1.4404)	
Standard length, 235 mm (9.25 inch)	**3 1**
Add Order code Y01 and plain text: "Insertion length ... mm"	
300 ... 500 mm (11.81 ... 19.69 inch)	**3 2**
501 ... 750 mm (19.72 ... 29.53 inch)	**3 3**
751 ... 1 000 mm (29.57 ... 39.37 inch)	**3 4**
1 001 ... 1 250 mm (39.41 ... 49.21 inch)	**3 5**
1 251 ... 1 500 mm (49.25 ... 59.06 inch)	**3 6**
1 501 ... 1 750 mm (59.09 ... 68.90 inch)	**3 7**
1 751 ... 2 000 mm (68.94 ... 78.74 inch)	**3 8**
2 001 ... 2 250 mm (78.78 ... 88.58 inch)	**4 1**
2 251 ... 2 500 mm (88.62 ... 98.43 inch)	**4 2**
2 501 ... 2 750 mm (98.46 ... 108.27 inch)	**4 3**
2 751 ... 3 000 mm (108.31 ... 118.11 inch)	**4 4**
3 001 ... 3 250 mm (118.15 ... 127.95 inch)	**4 5**
3 251 ... 3 500 mm (127.99 ... 137.80 inch)	**4 6**
3 501 ... 3 750 mm (137.83 ... 147.64 inch)	**4 7**
3 751 ... 4 000 mm (147.68 ... 157.48 inch)	**4 8**
Material process connection/extension	
Stainless steel threads 304 (1.4301), flanges 321 (1.4541), Tri-clamp 304 (1.4301)[8]	**1**
Stainless steel 316L (1.4404)[9]	**2**
Approvals	
CSA/FM Dust Ignition Proof, RCM	**A**
ATEX II ½ D, RCM	**B**
CSA/FM General Purpose, RCM, CE	**C**
CE, RCM	**D**
CSA/FM IS Class I, II, III Div. 1, Groups A, B, C, D, E, F, G, FM Class I, Aex ia IIC, CSA Class I, Ex ia IIC, RCM	**E**
ATEX II 1G and ½G Eex ia IIC; ATEX II 1D and ½D, RCM	**F**
IEC-Ex t IIIC Da/Db	**G**
EAC Ex ta/tb IIIC Da/Db, Ex ta IIIC Da	**H**
EAC Ex Ga/Gb Ex ia IIC, 0Ex ia IIC Ga; Ex ta/tb IIIC Da/Db, Ex ta IIIC Da	**J**

1) Available with Approval options A ... D, G only.
2) Available with Approval options D, E, F only.
3) Available with Approval options B, D, G only.
4) Available with configurations 7ML5731-7AA11-1BA0 or 7ML5731-7AB11-1AA0 only.
5) Basic version is cost effective and offers fast delivery.
6) Not available with extension length options 11, 12, 31, 32.
7) Max. 6 bar (87 psi).
8) Available with option extension length 11 ... 28.
9) Available with option extension length 31 … 48.

© Siemens 2020

Selection and ordering data

	Order code
Further Designs	
Please add "**-Z**" to Article No. and specify Order code(s).	
Factory test certificate - M to DIN 55350, Part 18	**C11**
Total insertion length: Enter the total insertion length in plain text description, max. 4 000 mm (157.48 inch)	**Y01**
Stainless steel tag [100 x 45 mm (3.94 x 1.77 inch)]: Measuring-point number/identification (max. 27 characters); specify in plain text	**Y14**
Enhanced sensitivity > 5 g/l via electronics and increased insertion length of 25 mm (0.98 inch)[3]	**K05**
Enhanced sensitivity < 5 g/l via electronics, increased insertion length of 25 mm (0.98 inch), and increased aluminum fork width[1][3]	**G01**
Signal bulb inserted in M20 cable gland[2]	**A20**
NAMUR 8/16 mA switch amplifiers available, contact factory for pricing	
Operating Instructions	
All literature is available to download for free, in a range of languages, at	

http://www.siemens.com/processinstrumentation/documentation

Spare Parts	Article No.
Replacement Electronics Module (125 Hz) [19 ... 230 V AC, 19 ... 55 V DC, one relay output (SPDT)]	**7ML1830-1KL**
Replacement Electronics Module (125 Hz) [19 ... 230 V AC, 19 ... 55 V DC, two relay output (DPDT)]	**A5E35525363**
Sliding sleeve, 2" BSP (ISO 228)	**7ML1830-1JM**
Sliding sleeve, 2" NPT (ASME B1.20.1)	**7ML1830-1JN**
Namur Isolator switch amplifier relay output KFD2-SR2-Ex1.W	**A5E35667901**
SITRANS LVS200, standard, power supply 7, process temperature A, process connection A, extension length 11, material process connection/ extension 1, and approval B	**7ML5731-7AA11-1BA0**
SITRANS LVS200, standard, power supply 7, process temperature A, process connection B, extension length 11, material process connection/ extension 1, and approval A	**7ML5731-7AB11-1AA0**

1) Available only with power supply option 1 and Approval options C, D and with Process connection flange options E ... J.
2) Available with Approval option D only.
3) K05 and G01 are not available together.

SITRANS LVS200 Vibrating fork point level switch, short fork and interface design ↗	**7ML5732-** ■ ■ ■ ■ ■ - ■ ■ **A 0**
Level and material detection in dry bulk solids or solids interface within a liquid. Extension options to 4 m (13.12 ft). With advanced testing, output, and durability options.	
↗ Click on the Article No. for the online configuration in the PIA Life Cycle Portal.	
Power supply	
19 ... 230 V AC, 19 ... 55 V DC, one relay output (SPDT)[6]	**1**
19 ... 230 V AC, 19 ... 55 V DC, two relay outputs (DPDT)[6]	**2**
18 ... 50 V DC PNP[6]	**3**
19 ... 230 V AC/DC without contact, 2-wire loop powered[6]	**4**
8/16 mA or 4 ... 20 mA; 12.5 ... 35 V DC, 2-wire[1]	**5**
Process temperature	
Without temperature isolator	**A**
With temperature isolator	**B**
Separated enclosure - cable length 1.5 m (4.92 ft) [max. temperature process 150 °C (302 °F)/max. temperature electronics 60 °C (140 °F)]	**C**
Separated enclosure - cable length 4.0 m (13.12 ft) [max. temperature process 150 °C (302 °F)/max. temperature electronics 60 °C (140 °F)]	**D**
Process connection	
Threaded	
R 1½" [(BSPT), EN 10226]	**A**
1½" NPT [(Taper), ANSI/ASME B1.20.1]	**B**
G 2" [(BSPP), EN ISO 228-1], sliding sleeve [min. length 500 mm (19.69 inch)][2]	**C**
2" NPT [(Taper), ANSI/ASME B1.20.1], sliding sleeve [min. length 500 mm (19.69 inch)][2]	**D**
Flanged	
DN 100 PN 6, EN 1092-1, flat face[3]	**E**
DN 100 PN 16, EN 1092-1, flat face	**F**
2" ASME 150 lb B16.5, raised face	**G**
3" ASME 150 lb B16.5, raised face	**H**
4" ASME 150 lb B16.5, raised face	**J**
2" Tri-clamp (DN 50) ISO 2852	**K**
Extension length	
Stainless steel 304 (1.4301)	
Standard length, 165 mm (6.50 inch)	**1 1**
Add Order code Y01 and plain text: "Insertion length ... mm"	
200 ... 500 mm (7.87 ... 19.69 inch)	**1 2**
501 ... 750 mm (19.72 ... 29.53 inch)	**1 3**
751 ... 1 000 mm (29.57 ... 39.37 inch)	**1 4**
1 001 ... 1 250 mm (39.41 ... 49.21 inch)	**1 5**
1 251 ... 1 500 mm (49.25 ... 59.06 inch)	**1 6**
1 501 ... 1 750 mm (59.09 ... 68.90 inch)	**1 7**
1 751 ... 2 000 mm (68.94 ... 78.74 inch)	**1 8**
2 001 ... 2 250 mm (78.78 ... 88.58 inch)	**2 1**
2 251 ... 2 500 mm (88.62 ... 98.43 inch)	**2 2**
2 501 ... 2 750 mm (98.46 ... 108.27 inch)	**2 3**
2 751 ... 3 000 mm (108.31 ... 118.11 inch)	**2 4**
3 001 ... 3 250 mm (118.15 ... 127.95 inch)	**2 5**
3 251 ... 3 500 mm (127.99 ... 137.80 inch)	**2 6**
3 501 ... 3 750 mm (137.83 ... 147.64 inch)	**2 7**
3 751 ... 4 000 mm (147.68 ... 157.48 inch)	**2 8**

© Siemens 2020

Selection and ordering data

	Article No.
SITRANS LVS200 Vibrating fork point level switch, short fork and interface design	**7ML5732-** ■ ■ ■ ■ ■ - ■ ■ **A 0**
Level and material detection in dry bulk solids or solids interface within a liquid. Extension options to 4 m (13.12 ft). With advanced testing, output, and durability options.	
Stainless steel 316L (1.4404)	
Standard length, 165 mm (6.50 inch)	**3 1**
Add Order code Y01 and plain text: "Insertion length ... mm"	
200 ... 500 mm (7.87 ... 19.69 inch)	**3 2**
501 ... 750 mm (19.72 ... 29.53 inch)	**3 3**
751 ... 1 000 mm (29.57 ... 39.37 inch)	**3 4**
1 001 ... 1 250 mm (39.41 ... 49.21 inch)	**3 5**
1 251 ... 1 500 mm (49.25 ... 59.06 inch)	**3 6**
1 501 ... 1 750 mm (59.09 ... 68.90 inch)	**3 7**
1 751 ... 2 000 mm (68.94 ... 78.74 inch)	**3 8**
2 001 ... 2 250 mm (78.78 ... 88.58 inch)	**4 1**
2 251 ... 2 500 mm (88.62 ... 98.43 inch)	**4 2**
2 501 ... 2 750 mm (98.46 ... 108.27 inch)	**4 3**
2 751 ... 3 000 mm (108.31 ... 118.11 inch)	**4 4**
3 001 ... 3 250 mm (118.15 ... 127.95 inch)	**4 5**
3 251 ... 3 500 mm (127.99 ... 137.80 inch)	**4 6**
3 501 ... 3 750 mm (137.83 ... 147.64 inch)	**4 7**
3 751 ... 4 000 mm (147.68 ... 157.48 inch)	**4 8**
Material process connection/extension	
Stainless steel threads 304 (1.4301), flanges 321 (1.4541), Tri-clamp 304 (1.4301)[4]	**1**
Stainless steel 316L (1.4404)[5]	**2**
Approvals	
CSA/FM Dust Ignition Proof, RCM	**A**
ATEX II ½ D, RCM	**B**
CSA/FM General Purpose, RCM, CE	**C**
CE, RCM	**D**
IEC-Ex t IIIC Da/Db	**E**
ATEX II 1G and ½G Eex ia IIC; ATEX II 1D and ½D, CE, RCM	**F**
EAC Ex ta/tb IIIC Da/Db, Ex ta IIIC Da	**G**
EAC Ex Ga/Gb Ex ia IIC, 0Ex ia IIC Ga; Ex ta/tb IIIC Da/Db, Ex ta IIIC Da	**H**

1) Available with Approval options B, D, E only.
2) Not available with extension length options 11, 12, 31, 32.
3) Max. 6 bar (87 psi).
4) Available with extension length options 11 ... 28.
5) Available with extension length options 31 … 48.
6) Power supply options 1, 2, 3, 4 not allowed with Approvals options F and H.

	Article No.
Further Designs	Order code
Please add "**-Z**" to Article No. and specify Order code(s).	
Factory test certificate - M to DIN 55350, Part 18	**C11**
Total insertion length: Enter the total insertion length in plain text description, max. 4 000 mm (147.48 inch)	**Y01**
Stainless steel tag [100 x 45 mm (3.94 x 1.77 inch)]: Measuring-point number/identification (max. 27 characters); specify in plain text	**Y14**
Signal bulb inserted in M20 cable gland[1)3)]	**A20**
Note: G02 must be ordered for solids/liquids interface detection.	
Adjustable sensitivity (by potentiometer) for solids/liquids interface detection[1)2)4)]	**G02**
Operating Instructions	
All literature is available to download for free, in a range of languages, at	
http://www.siemens.com/processinstrumentation/documentation	
Spare Parts	Article No.
Replacement Electronics Module (125 Hz) [19 ... 230 V AC, 19 ... 55 V DC, two relay output (DPDT)]	**A5E35525363**
Replacement Electronics Module (350 Hz) [19 ... 230 V AC, 19 ... 55 V DC, one relay output (SPDT)]	**7ML1830-1KM**
Sliding sleeve, 2" BSP (ISO 228)	**7ML1830-1JM**
Sliding sleeve, 2" NPT (ASME B1.20.1)	**7ML1830-1JN**

1) Available with Approval option D only.
2) Available with power supply option 1 only.
3) A20 not allowed with power supply options 4 or 5.
4) G02 not allowed with process temperature options C or D.

© Siemens 2020

Selection and ordering data

	Article No.	
SITRANS LVS200 Vibrating fork point level switch, pipe extension design ↗	**7ML5733-**	
Level and material detection in dry bulk solids. Requires customer supplied pipe extension with insertion to 3.8 m (12.47 ft). With advanced testing, output, and durability options.	■ ■ ■ ■ ■ - ■ ■ **A 0**	
↗ Click on the Article No. for the online configuration in the PIA Life Cycle Portal.		
Power supply		
19 ... 230 V AC, 19 ... 55 V DC, one relay output (SPDT)[1]	**1**	
19 ... 230 V AC, 19 ... 55 V DC, two relay outputs (DPDT)[1]	**2**	
18 ... 50 V DC PNP[1]	**3**	
19 ... 230 V AC/DC without contact, 2-wire loop powered[1]	**4**	
7 ... 9 V DC (requires NAMUR switch amplifier) NAMUR IEC 60947-5-6, 2-wire[2]	**5**	
8/16 mA or 4 ... 20 mA; 12.5 ... 35 V DC, 2-wire[3]	**6**	
Process temperature		
Up to 150 °C (302 °F)	**A**	
Process connection		
Threaded		
R 1½" [(BSPT), EN 10226]	**A**	
1½" NPT [(Taper), ANSI/ASME B1.20.1]	**B**	
Flanged		
DN 100 PN 6, EN 1092-1, flat face[4]	**C**	
DN 100 PN 16, EN 1092-1, flat face	**D**	
2" ASME 150 lb B16.5, raised face	**E**	
3" ASME 150 lb B16.5, raised face	**F**	
4" ASME 150 lb B16.5, raised face	**G**	
2" Tri-clamp (DN 50) ISO 2852	**K**	
Process connection material		
Stainless steel threads 304 (1.4301), flanges 321(1.4541), Tri-clamp 304 (1.4301)	**1**	
Stainless steel 316L (1.4404)	**2**	
Extension length		
Customer supplied 1" pipe extension Length: 300 ... 3 800 mm (11.81 ... 149.61 inch)	**1**	
Application type		
Dry bulk solids (125 Hz)	**1**	
Liquids/solids interface (350 Hz)	**2**	
Approvals		
CSA/FM Dust Ignition Proof, RCM	**A**	
ATEX II ½D, RCM	**B**	
CSA/FM General Purpose, RCM, CE	**C**	
CE, RCM	**D**	
CSA/FM IS Class I, II, III Div. 1, Groups A, B, C, D, E, F, G, FM Class I, Aex ia IIC, CSA Class I, Ex ia IIC, RCM	**E**	
ATEX II 1G and ½G Eex ia IIC; ATEX II 1D and ½D, RCM	**F**	
IEC-Ex t IIIC Da/Db	**G**	
EAC Ex ta/tb IIIC Da/Db, Ex ta IIIC Da	**H**	
EAC Ex Ga/Gb Ex ia IIC, 0Ex ia IIC Ga; Ex ta/tb IIIC Da/Db, Ex ta IIIC Da	**J**	

[1] Available with Approval options A, B, C, D, G only.
[2] Available with Approval options D, E, F, J and application type 1 only.
[3] Available with Approval options B, D, F, G, H only.
[4] Max. 6 bar (87 psi).

	Order code
Further Designs	
Please add "**-Z**" to Article No. and specify Order code(s).	
Factory test certificate - M to DIN 55350, Part 18	**C11**
Total insertion length: Enter the total insertion length in plain text description, max. 3 800 mm (149.61 inch)	**Y01**
Stainless steel tag [100 x 45 mm (3.94 x 1.77 inch)]: Measuring-point number/identification (max. 27 characters); specify in plain text	**Y14**
Enhanced sensitivity > 5 g/l via electronics and increased insertion length of 25 mm (0.98 inch)[5]	**K05**
Enhanced sensitivity < 5 g/l via electronics, increased insertion length of 25 mm (0.98 inch) and increased aluminum fork width[1)4)5)]	**G01**
Adjustable sensitivity (by potentiometer) for solids/liquids interface detection[2)3)4)]	**G02**
Signal bulb inserted in M20 cable gland[2)6)]	**A20**
Operating Instructions	
All literature is available to download for free, in a range of languages, at	
http://www.siemens.com/processinstrumentation/documentation	
Spare Parts	Article No.
Replacement Electronics Module (125 Hz) [19 ... 230 V AC, 19 ... 55 V DC, one relay output (SPDT)]	**7ML1830-1KL**
Replacement Electronics Module (125 Hz) [19 ... 230 V AC, 19 ... 55 V DC, two relay output (DPDT)]	**A5E35525363**
Replacement Electronics Module (350 Hz) [19 ... 230 V AC, 19 ... 55 V DC, one relay output (SPDT)]	**7ML1830-1KM**
NAMUR Isolated switch amplifier Relay output KFD2-SR2-Ex1.W	**A5E35667901**

[1] Available only with power supply option 1 and Approvals options C, D, and with Process connection flange options C … G.
[2] Available with Approval options D only.
[3] Available with Power supply option 1 only and application type option 2.
[4] Not available with option K05.
[5] Available with Application type option 1 only.
[6] A20 not allowed with Power supply options 4, 5, and 6.

© Siemens 2020

Selection and ordering data

	Article No.
SITRANS LVS200 Vibrating fork point level switch, cable extended design ↗	**7ML5734-** ■ ■ ■ ■ ■ - ■ ■ **A 0**
Level and material detection in dry bulk solids. Extension options to 20 m (65.62 ft). With advanced testing, output, and durability options. Measures bulk densities less than 5 g/l (0.3 lb/ft^3).	
↗ Click on the Article No. for the online configuration in the PIA Life Cycle Portal.	
Power supply	
19 ... 230 V AC, 19 ... 55 V DC, one relay output (SPDT)[1]	**1**
19 ... 230 V AC, 19 ... 55 V DC, two relay outputs (DPDT)[1]	**2**
18 ... 50 V DC PNP[1]	**3**
19 ... 230 V AC/DC without contact, 2-wire loop powered[1]	**4**
7 ... 9 V DC (requires NAMUR switch amplifier) NAMUR IEC 60947-5-6, 2-wire[2][5]	**5**
8/16 mA or 4 ... 20 mA; 12.5 ... 35 V DC, 2-wire[3]	**6**
Process temperature	
Up to 80 °C (176 °F)	**A**
Process connection	
Threaded	
R 1½" [(BSPT), EN 10226] (1.4301/304)	**A**
1½" NPT [(Taper), ANSI/ASME B1.20.1] (1.4301/304)	**B**
Flanged	
DN 100 PN 6, EN 1092-1 (1.4541/321), flat face[4]	**C**
DN 100 PN 16, EN 1092-1 (1.4541/321), flat face	**D**
2" ASME 150 lb B16.5 (1.4541/321), raised face	**E**
3" ASME 150 lb B16.5 (1.4541/321), raised face	**F**
4" ASME 150 lb B16.5 (1.4541/321), raised face	**G**
Extension length	
750 ... 1 000 mm (29.5 ... 39.4 inch) [max. length 20 000 mm (787.4 inch), not with Power supply option 5 (max. 10 000 mm, 393.7 inch)][8]	**1 0**
Add Order code Y01 and plain text: "Insertion length ... mm"	
1 001 ... 2 000 mm (39.41 ... 78.74 inch)	**1 1**
2 001 ... 3 000 mm (78.78 ... 118.11 inch)	**1 2**
3 001 ... 4 000 mm (118.15 ... 157.48 inch)	**1 3**
4 001 ... 5 000 mm (157.52 ... 196.85 inch)	**1 4**
5 001 ... 6 000 mm (196.89 ... 236.22 inch)	**1 5**
6 001 ... 7 000 mm (236.26 ... 275.59 inch)	**1 6**
7 001 ... 8 000 mm (275.63 ... 314.96 inch)[5]	**1 7**
8 001 ... 9 000 mm (315 ... 354.33 inch)[5]	**1 8**
9 001 ... 10 000 mm (354.37 ... 393.70 inch)[5]	**2 0**
10 001 ... 11 000 mm (393.74 ... 433.07 inch)[5][6]	**2 1**
11 001 ... 12 000 mm (433.11 ... 472.44 inch)[5][6]	**2 2**
12 001 ... 13 000 mm (472.48 ... 511.81 inch)[5][6]	**2 3**
13 001 ... 14 000 mm (511.85 ... 551.18 inch)[5][6]	**2 4**
14 001 ... 15 000 mm (551.22 ... 590.55 inch)[5][6]	**2 5**
15 001 ... 16 000 mm (590.59 ... 629.92 inch)[5][6]	**2 6**
16 001 ... 17 000 mm (629.96 ... 669.29 inch)[5][6]	**2 7**
17 001 ... 18 000 mm (669.33 ... 708.66 inch)[5][6]	**2 8**
18 001 ... 19 000 mm (708.70 ... 748.03 inch)[5][6]	**3 0**
19 001 ... 20 000 mm (748.07 ... 787.40 inch)[5][6]	**3 1**
Application type	
Dry bulk solids (125 Hz)	**1**
Liquids/solids interface detection, short insertion or heavier materials (350 Hz)[7]	**2**

	Article No.
SITRANS LVS200 Vibrating fork point level switch, cable extended design	**7ML5734-** ■ ■ ■ ■ ■ - ■ ■ **A 0**
Level and material detection in dry bulk solids. Extension options to 20 m (65.62 ft). With advanced testing, output, and durability options. Measures bulk densities less than 5 g/l (0.3 lb/ft^3).	
Approvals	
CSA/FM Dust Ignition Proof, RCM	**A**
ATEX II ½D, RCM	**B**
CSA/FM General Purpose, RCM, CE	**C**
CE, RCM	**D**
CSA/FM IS Class I, II, III Div. 1, Groups A, B, C, D, E, F, G, FM Class I, Aex ia IIC, CSA Class I, Ex ia IIC, RCM	**E**
ATEX II 1G and ½G Eex ia IIC; ATEX II 1D and ½D, RCM[6]	**F**
IEC-Ex t IIIC Da/Db	**G**
EAC Ex ta/tb IIIC Da/Db, Ex ta IIIC Da	**H**
EAC Ex Ga/Gb Ex ia IIC, 0Ex ia IIC Ga; Ex ta/tb IIIC Da/Db, Ex ta IIIC Da	**J**

1) Available with Approval options A, B, C, D, G only.
2) Available with Approval options D, E, and F only. Not available for Application type option 2.
3) Available with Approval option D only.
4) Max. 6 bar (87 psi).
5) Not available with Application type option 2.
6) Not available with Power supply option 5.
7) Cable length is limited to 7 000 mm (275.59 inch).
8) Available with Power supply options 1 … 4, and 6.

© Siemens 2020

Selection and ordering data

	Order code
Further Designs	
Please add "**-Z**" to Article No. and specify Order code(s).	
Factory test certificate - M to DIN 55350, Part 18	**C11**
Enter the total insertion length in plain text description, max. 20 000 mm (787.40 inch)	**Y01**
Stainless steel tag [100 x 45 mm (3.94 x 1.77 inch)]: Measuring-point number/identification (max. 27 characters); specify in plain text	**Y14**
Enhanced sensitivity > 5 g/l via electronics and increased insertion length of 25 mm (0.98 inch)[5]	**K05**
Enhanced sensitivity < 5 g/l via electronics and increased insertion length of 25 mm (0.98 inch) and increased aluminum fork width[1][4]	**G01**
Adjustable sensitivity (by potentiometer) for solids/liquids interface detection[2][3][4]	**G02**
Signal bulb inserted in M20 cable gland[2][6]	**A20**

	Article No.
Operating Instructions	
All literature is available to download for free, in a range of languages, at	
http://www.siemens.com/processinstrumentation/documentation	
Spare Parts	
Replacement Electronics Module (125 Hz) [19 ... 230 V AC, 19 ... 55 V DC, one relay output (SPDT)]	**7ML1830-1KL**
Replacement Electronics Module (125 Hz) [19 ... 230 V AC, 19 ... 55 V DC, two relay output (DPDT)]	**A5E35525363**
Replacement Electronics Module (350 Hz) [19 ... 230 V AC, 19 ... 55 V DC, one relay output (SPDT)]	**7ML1830-1KM**
NAMUR Isolated switch amplifier Relay output KFD2-SR2-Ex1.W	**A5E35667901**

1) Available only with power supply option 1 and Approvals C, D, and with process connection flange options C … G.
2) Available with Approval options D only.
3) Available with Power supply option 1 and Application type 2 option only.
4) Not available with option K05.
5) Available with Application type option 1 only.
6) A20 not allowed with Power supply options 4, 5, or 6.

© Siemens 2020

Dimensional drawings

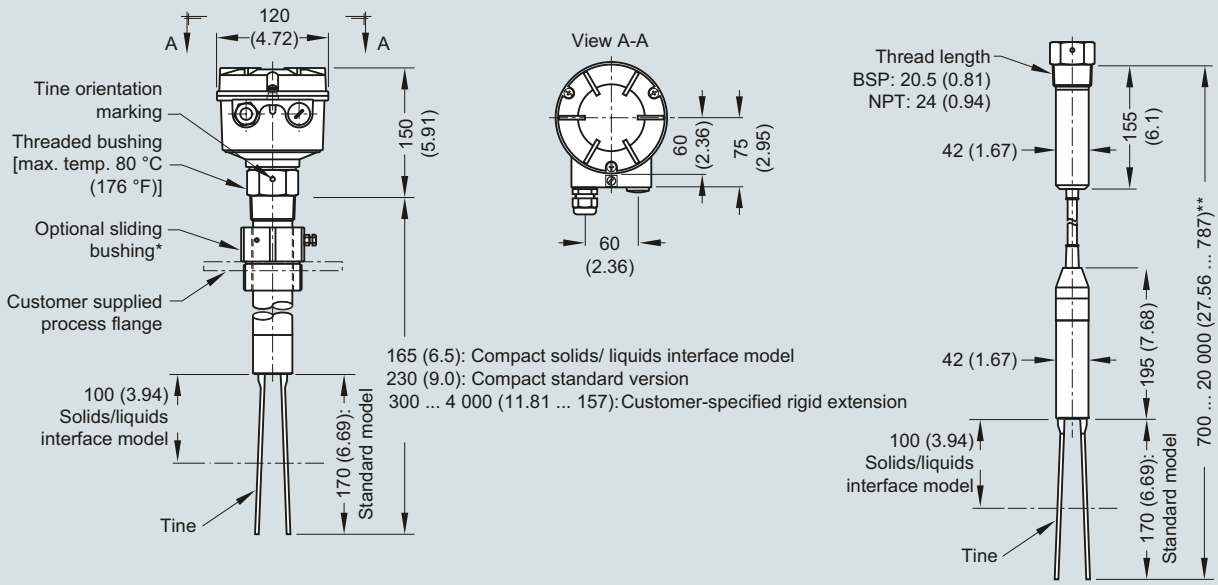

Notes:

* The clamping screws of the sliding bushing must be tightened to 10 Nm.
** Cable version with liquids/solids interface model option length to 7 000 mm (275.59 inch)
Cable version with NAMUR electronics length to 10 000 mm (393.7 inch) tightened to 10 Nm.
See manual for pipe extended version details. (Pipe is customer supplied.)

SITRANS LVS200, dimensions in mm (inch)

© Siemens 2020

Circuit diagrams

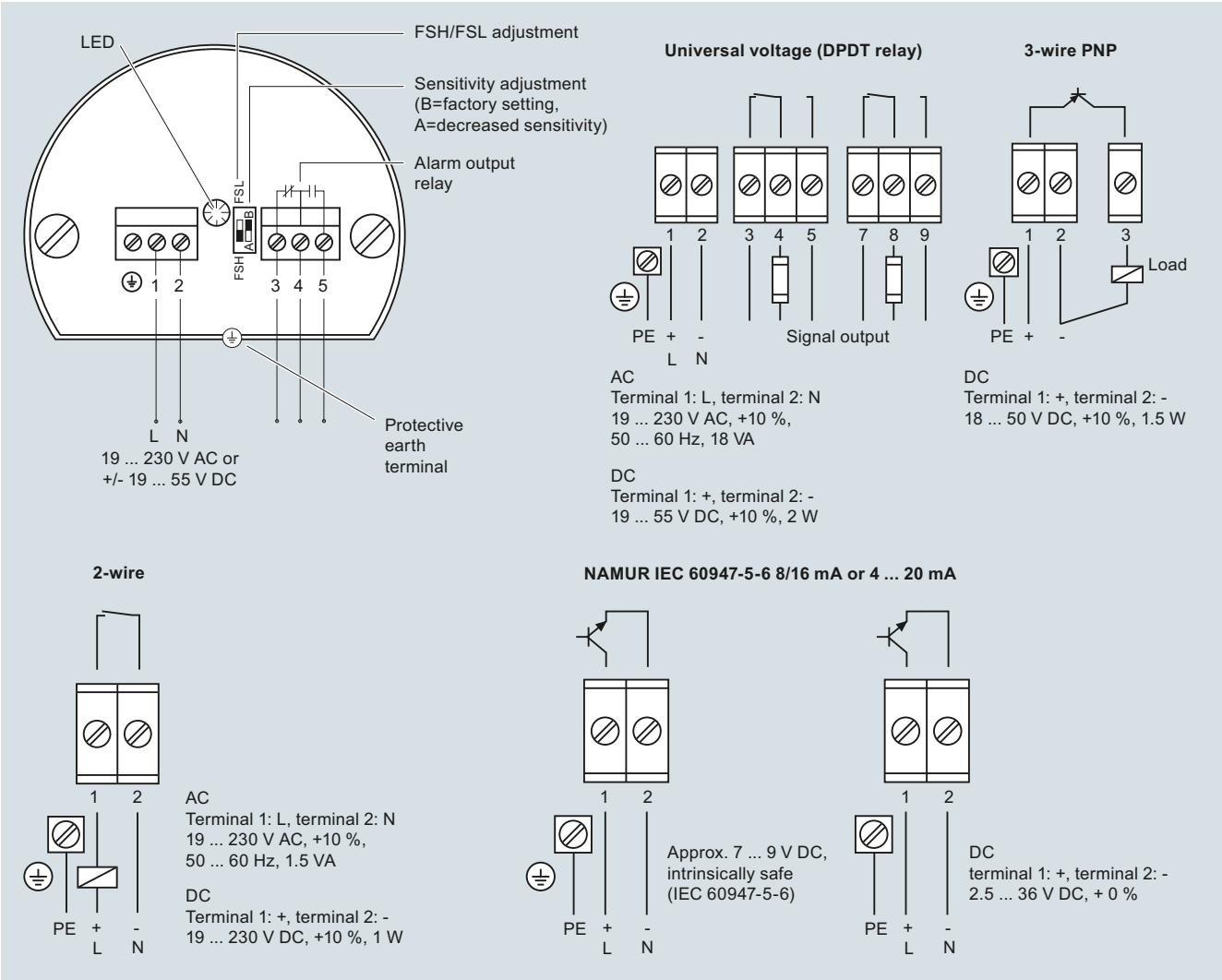

SITRANS LVS200 connections

© Siemens 2020

Overview

SITRANS LVS300 is a vibrating rod point level switch for high, low, or demand level detection of bulk solids.

Benefits

- High resistance to mechanical forces.
- Adjustable sensitivity for varied applications including build-up.
- Rotatable enclosure for convenient wiring.
- Suitable for low density material: standard version, 20 g/l (1.3 lb/ft^3).
- Customer desired extensions up to 4 000 mm (157 inch).
- 160 mm (6.3 inch) insertion length.
- Flexible, customer supplied, rods to 4 meters.
- Process connections starting at 1 inch.

Application

The standard LVS300 detects high, low, or demand levels of dry bulk solids in bins, silos, or hoppers.

A pipe extension version is available, separated by a customer supplied 1 inch pipe.

The LVS300 has a compact design and can be top, side or angle mounted. The vibrating rod design ensures the product will not be impacted by bridging of traditional forks in applications with buildup potential. A durable probe design ensures the product will withstand heavier materials without damage or bending.

A signal from the electronic circuit excites a crystal in the probe causing the rod to vibrate. If the rod is covered by material, the change in vibration is detected by the electronic circuitry which causes the output to change state after a one second delay. When the probe is free from material, full vibration resumes and the relay reverts to its normal condition.

- Key Applications: dry or bulk solids with buildup potential, in bins, silos, or hoppers, such as lime, molding sand, milk powder, flour, salt, and plastic granules.

© Siemens 2020

Technical specifications

Mode of operation	
Measuring principle	Vibrating point level switch
Input	
Measured variable	High, low, and demand
Measuring frequency • Standard	 330 Hz
Output	
PNP	Open collector: Permanent load max. 0.4 A, short-circuit and overload protected (reverse protection)
Relay	DPDT relay
Signal delay	• Probe uncovered to covered: approximately 1 second • Probe covered to uncovered: approximately 1 ... 2 seconds
Relay fail-safe	High or low, switch selectable
Alarm output	• Relay 8 A at 250 V AC, non-inductive • Relay 5 A at 30 V DC, non-inductive
Sensitivity	Four sensitivity settings, switch selectable

Rated operating conditions	
Installation conditions • Location	 Indoor/outdoor
Ambient conditions • Ambient temperature • Storage temperature • Installation category • Pollution degree	 -40 ... +60 °C (-40 ... +140 °F) -40 ... +80 °C (-40 ... +176 °F) II 2
Medium conditions • Process temperature • Pressure (vessel) • Minimum material density	 -40 ... +150 °C (-40 ... +302 °F) Max. 16 bar g (232 psi g) European Pressure Directive 2014/68/EU: Category 1 Approx. 20 g/l (1.2 lb/ft^3)
Design	
Material • Enclosure	 Aluminum powder coat
Process connection	• G 1", G 1 1/4", G 1 1/2" DIN 228; NPT 1", NPT 1 1/4", NPT 1 1/2" ANSI B 1.20.1 • Flange: according to selection 1.4541 (321) or 1.4404 (316L) • Tri-clamp: stainless steel 1.4301 (304) or 1.4404 (316L) • 2" (DN 50) ISO 2852
Probe material	• Oscillator material: stainless steel 1.4404 (316L) • Stainless steel 1.4301 (304)/1.4541 (321) or 1.4404 (316L) (process connection and tube extension)
Degree of protection	IP67 (EN 60529), NEMA Type 4X
Conduit entry	2 x M20 x 1.5 or 2 x ½" NPT
Weight	• Standard version: 1.3 kg (2.9 lb) +1.3 kg/m (+2.9 lb per 39.3 inch) extension • Customer supplied pipe: 1.8 kg (4.0 lb) +1.3 kg/m (+2.9 lb per 39.3 inch) extension
Power supply	• Relay DPDT 21 ... 230 V, 50 ... 60 Hz, ± 10 %* 22 VA, 22 ... 45 V DC, ± 10 %* 2W *incl. ± 10 % of EN 61010 • 3-wire PNP 20 ... 40 V DC, ± 10 %* *incl. ± 10 % of EN 61010
Certificates and approvals	CE, ATEX, FM

© Siemens 2020

Selection and ordering data

	Article No.	Order code
SITRANS LVS300 Vibrating rod point level switch, compact design ↗ Level and material detection in solids. Compact, with 160 mm (6.30 inch) insertion. ↗ Click on the Article No. for the online configuration in the PIA Life Cycle Portal.	**7ML5736-** ■■■■■-■■	
Power supply		
Relays DPDT 21 ... 230 V AC 22 ... 45 V DC	**1**	
PNP 20 ... 40 V DC	**2**	
Process temperature		
Without temperature isolator [up to Tprocess = 150 °C (302 °F) at Tamb < 40 °C (104 °F)]	**A**	
With temperature isolator [up to Tprocess = 150 °C (302 °F) at Tamb > 40 °C (104 °F)]	**B**	
Process connection		
Threaded		
Thread G 1½" (BSPP) EN ISO 228-1	**A**	
Thread G 1¼" (BSPP) EN ISO 228-1	**B**	
Thread G 1" (BSPP) EN ISO 228-1	**C**	
Thread NPT 1½" (Taper) ANSI B1.20.1	**D**	
Thread NPT 1¼" (Taper) ANSI B1.20.1	**E**	
Thread NPT 1" (Taper) ANSI B1.20.1	**F**	
Tri-clamp 2" (DN50) ISO 2852	**G**	
Flanged		
Flange DN 100 PN6, EN1092-1[1]	**H**	
Flange DN 100 PN16, EN1092-1	**J**	
2" ASME 150 lb B16.5	**K**	
3" ASME 150 lb B16.5	**L**	
4" ASME 150 lb B16.5	**M**	
Extension length		
Standard length, 160 mm (6.3 inch)	**1 1**	
Material process connection/extension		
Stainless steel threads 304 (1.4301), flanges 321 (1.4541), Tri-clamp 304 (1.4301)	**1**	
Stainless steel 316 L (1.4404)	**2**	
Approvals		
CE	**A**	
ATEX II 1/2D Ex ta/tb IIIC TI Da/Db IP6X	**B**	
FM_{US} and FM_C General Purpose	**C**	
FM_{US} and FM_C DIP Class II, III Div.1 Groups E, F, G	**D**	
Further designs		
Please add "**-Z**" to Article No. and specify Order code(s).		
Stainless steel tag [(70 mm x 13 mm (2.76 x 0.51 inch)]: Measuring-point number/identification (max. 27 characters) specify in plain text		**Y14**
Signal bulb inserted in M20 cable gland[2]		**A20**
Factory test certificate - M to DIN 55350, Part 18		**C11**
Operating Instructions		
All literature is available to download for free, in a range of languages, at https://intranet.entry.siemens.com		

[1] Max. 6 bar (87 psi).

[2] Available only with Approval option A.

4

© Siemens 2020

Selection and ordering data

	Article No.	Order code
SITRANS LVS300 Vibrating rod point level switch, pipe extended design ↗	**7ML5737-** ■■■■ - ■■	
Level and material detection in solids. Extension options up to 4 m (13.12 ft).		
↗ Click on the Article No. for the online configuration in the PIA Life Cycle Portal.		
Power supply		
Relays DPDT 21 ... 230 V AC 22 ... 45 V DC	1	
PNP 20 ... 40 V DC	2	
Process temperature		
Without temperature isolator [up to Tprocess = 150 °C (302 °F) at Tamb < 40 °C (104 °F)]	A	
With temperature isolator [up to Tprocess = 150 °C (302 °F) at Tamb > 40 °C (104 °F)]	B	
Process connection		
Threaded		
Thread G 1½" (BSPP) EN ISO 228-1	A	
Thread G 1¼" (BSPP) EN ISO 228-1	B	
Thread G 1" (BSPP) EN ISO 228-1	C	
Thread NPT 1½" (Taper) ANSI B1.20.1	D	
Thread NPT 1¼ " (Taper) ANSI B1.20.1	E	
Thread NPT 1" (Taper) ANSI B1.20.1	F	
Tri-clamp 2" (DN50) ISO 2852	G	
Flanged		
Flange DN 100 PN6, EN1092-1[1]	H	
Flange DN 100 PN16, EN1092-1	J	
2" ASME 150 lb B16.5	K	
3" ASME 150 lb B16.5	L	
4" ASME 150 lb B16.5	M	
Extension length		
Extension length Stainless steel threads 304 (1.4301), flanges 321 (1.4541)		
200 ... 500 mm (7.87 ... 19.69 inch)	12	
501 ... 750 mm (19.72 ... 29.53 inch)	13	
751 ... 1 000 mm (29.57 … 39.37 inch)	14	
1 001 ... 1 250 mm (39.41 ... 49.21 inch)	15	
1 251 ... 1 500 mm (49.25 ... 59.06 inch)	16	
1 501 ... 1 750 mm (59.09 … 68.90 inch)	17	
1 751 ... 2 000 mm (68.94 ... 78.74 inch)	18	
2 001 ... 2 250 mm (78.78 ... 88.58 inch)	21	
2 251 ... 2 500 mm (88.62 ... 98.43 inch)	22	
2 501 ... 2 750 mm (98.46 ... 108.27 inch)	23	
2 751 ... 3 000 mm (108.31 ... 118.11 inch)	24	
3 001 ... 3 250 mm (118.15 ... 127.95 inch)	25	
3 251 ... 3 500 mm (127.99 ... 137.80 inch)	26	
3 501 ... 3 750 mm (137.83 ... 147.64 inch)	27	
3 751 ... 4 000 mm (147.68 ... 157.48 inch)	28	
Extension length Stainless steel 316 L (1.4404)		
200 ... 500 mm (7.87 ... 19.69 inch)	42	
501 ... 750 mm (19.72 ... 29.53 inch)	43	
751 ... 1 000 mm (29.57 … 39.37 inch)	44	
1 001 ... 1 250 mm (39.41 ... 49.21 inch)	45	
1 251 ... 1 500 mm (49.25 ... 59.06 inch)	46	
1 501 ... 1 750 mm (59.09 … 68.90 inch)	47	
1 751 ... 2 000 mm (68.94 ... 78.74 inch)	48	
2 001 ... 2 250 mm (78.78 ... 88.58 inch)	51	
2 251 ... 2 500 mm (88.62 ... 98.43 inch)	52	
2 501 ... 2 750 mm (98.46 ... 108.27 inch)	53	
2 751 ... 3 000 mm (108.31 ... 118.11 inch)	54	
3 001 ... 3 250 mm (118.15 ... 127.95 inch)	55	
3 251 ... 3 500 mm (127.99 ... 137.80 inch)	56	
3 501 ... 3 750 mm (137.83 ... 147.64 inch)	57	
3 751 ... 4 000 mm (147.68 ... 157.48 inch)	58	
Material process connection/extension		
Stainless steel threads 304 (1.4301), flanges 321 (1.4541), Tri-clamp 304 (1.4301)[2]	1	
Stainless steel 316 L (1.4404)[3]	2	
Approvals		
CE	A	
ATEX II 1/2D Ex ta/tb IIIC T! Da/Db IP6X	B	
FM_{US} and FM_C General Purpose	C	
FM_{US} and FM_C DIP Class II, III Div.1, Groups E, F, G	D	

	Order code
Further designs	
Please add "**-Z**" to Article No. and specify Order code(s).	
Enter the total insertion length in plain text description, max. 4 000 mm (157.48 inch)	**Y01**
Stainless steel tag [(70 mm x 13 mm (2.76 x 0.51 inch)]: Measuring-point number/identification (max. 27 characters) specify in plain text	**Y14**
Signal bulb inserted in M20 cable gland[4]	**A20**
Sliding sleeve, for application without overpressure max. 150 °C (302 °F), min. length 501 mm (19.72 inch)[5][6][7]	**P12**
Sliding sleeve, for application with overpressure, max. 16 bar (232 psi), max. 150 °C (302 °F), min. length 501 mm (19.72 inch)[6]	**P13**
Factory test certificate - M to DIN 55350, Part 18	**C11**
Operating Instructions	
All literature is available to download for free, in a range of languages, at	
http://www.siemens.com/processinstrumentation/documentation	
Spare parts	
Replacement Electronics Modules are available. Contact factory for pricing.	

1) Max. 6 bar (87 psi).
2) Available with extension length 12.
3) Available with extension length 42.
4) Available only with Approval option A.
5) Available only with Approval options A and C.
6) Available only with Process connection options A, D, H, J, K, L, M, not available with extension length 12 and 42.
7) Available only with Material Process connection/extension option 1.

© Siemens 2020

Selection and ordering data

	Article No.
SITRANS LVS300 Vibrating rod point level switch, customer supplied tube ↗	**7ML5738-** ■■■■■-■■
Level and material detection in solids. Requires flexible, customer supplied, pipe extensions with insertion to 4 m (13.12 ft).	
↗ Click on the Article No. for the online configuration in the PIA Life Cycle Portal.	
Power supply	
Relays DPDT 21 ... 230 V AC 22 ... 45 V DC	**1**
PNP 20 ... 40 V DC	**2**
Process temperature	
Without temperature isolator [up to Tprocess = 150 °C (302 °F) at Tamb < 40 °C (104 °F)]	**A**
Process connection	
Threaded	
Thread G 1½" (BSPP) EN ISO 228-1	**A**
Thread NPT 1½" (Taper) ANSI B1.20.1	**D**
Tri-clamp 2" (DN50) ISO 2852	**G**
Flanged	
Flange DN 100 PN6, EN1092-1[1]	**H**
Flange DN 100 PN16, EN1092-1	**J**
2" ASME 150 lb B16.5	**K**
3" ASME 150 lb B16.5	**L**
4" ASME 150 lb B16.5	**M**
Extension length	
1 500 mm (59 inch), adjustable cable length	**11**
4 000 mm (157 inch), adjustable cable length	**12**
Material process connection/extension	
Stainless steel threads 304 (1.4301), flanges 321 (1.4541), Tri-clamp 304 (1.4301)	**1**
Stainless steel 316 L (1.4404)	**2**
Approvals	
CE	**A**
ATEX II 1/2D Ex ta/tb IIIC T! Da/Db IP6X	**B**
FM_{US} and FM_C General Purpose	**C**
FM_{US} and FM_C DIP Class II, III Div.1, Groups E, F, G	**D**

	Order code
Further designs	
Please add "**-Z**" to Article No. and specify Order code(s).	
Stainless steel tag [(70 mm x 13 mm (2.76 x 0.51 inch)]: Measuring-point number/identification (max. 27 characters) specify in plain text	**Y14**
Signal bulb inserted in M20 cable gland[2]	**A20**
Factory test certificate - M to DIN 55350, Part 18	**C11**
Operating Instructions	
All literature is available to download for free, in a range of languages, at	
http://www.siemens.com/processinstrumentation/documentation	
Spare parts	
Replacement Electronics Modules are available. Contact factory for pricing.	

[1] Max. 6 bar (87 psi).

[2] Available only with Approval option A.

© Siemens 2020

Dimensional drawings

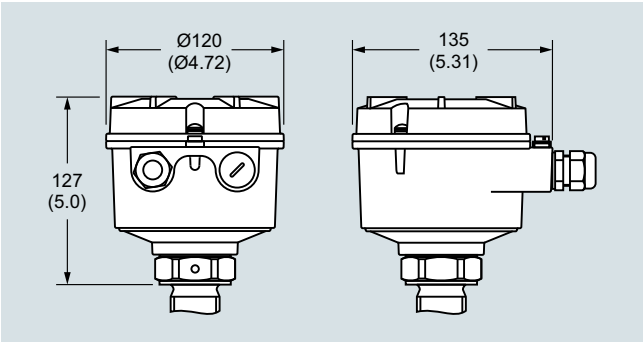

SITRANS LVS300 enclosure, dimensions in mm (inch)

© Siemens 2020

Dimensional drawings

Compact version

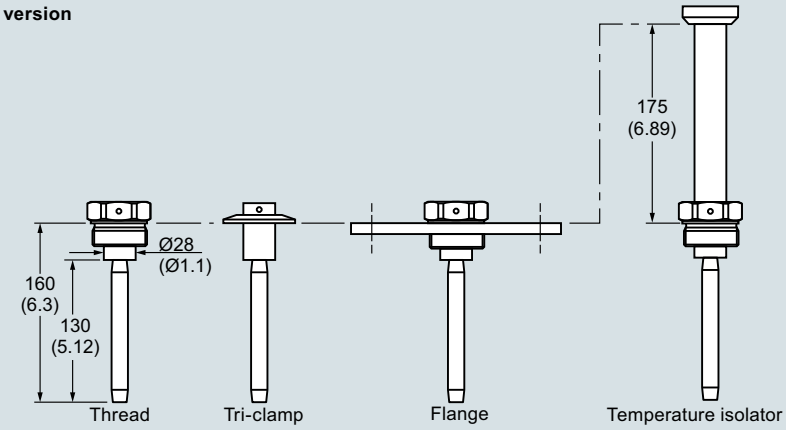

Pipe extension

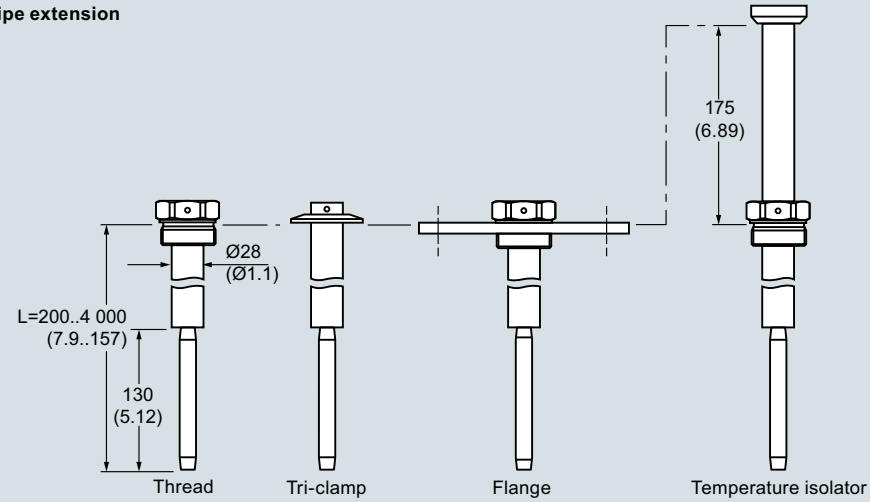

Pipe extension - customer mounted

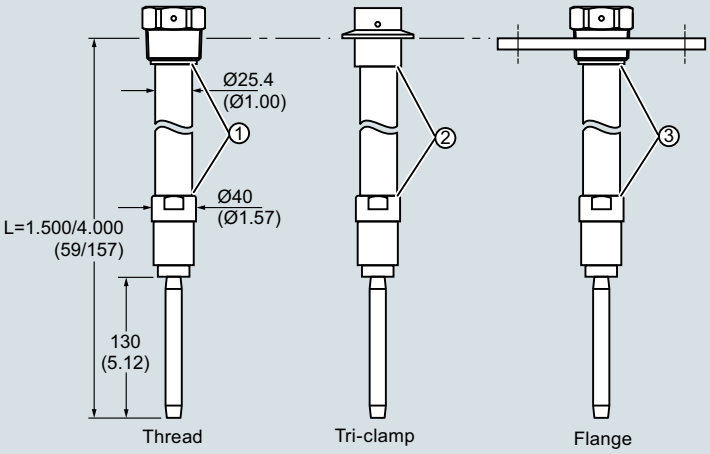

	Approval	Process connection	Thread on extension pipe
①	CE, ATEX	G 1½"	R 1"
	FM	NPT 1½"	NPT 1"

	Approval	Thread on extension pipe
②	CE, ATEX	R 1"
	FM	NPT 1"

	Approval	Process connection	Thread on extension pipe
③	CE, ATEX	Flange DN	R 1"
		Flange ANSI	NPT 1"
	FM	Flange DN Flange ANSI	NPT 1"

SITRANS LVS300, dimensions in mm (inch)

© Siemens 2020

Circuit diagrams

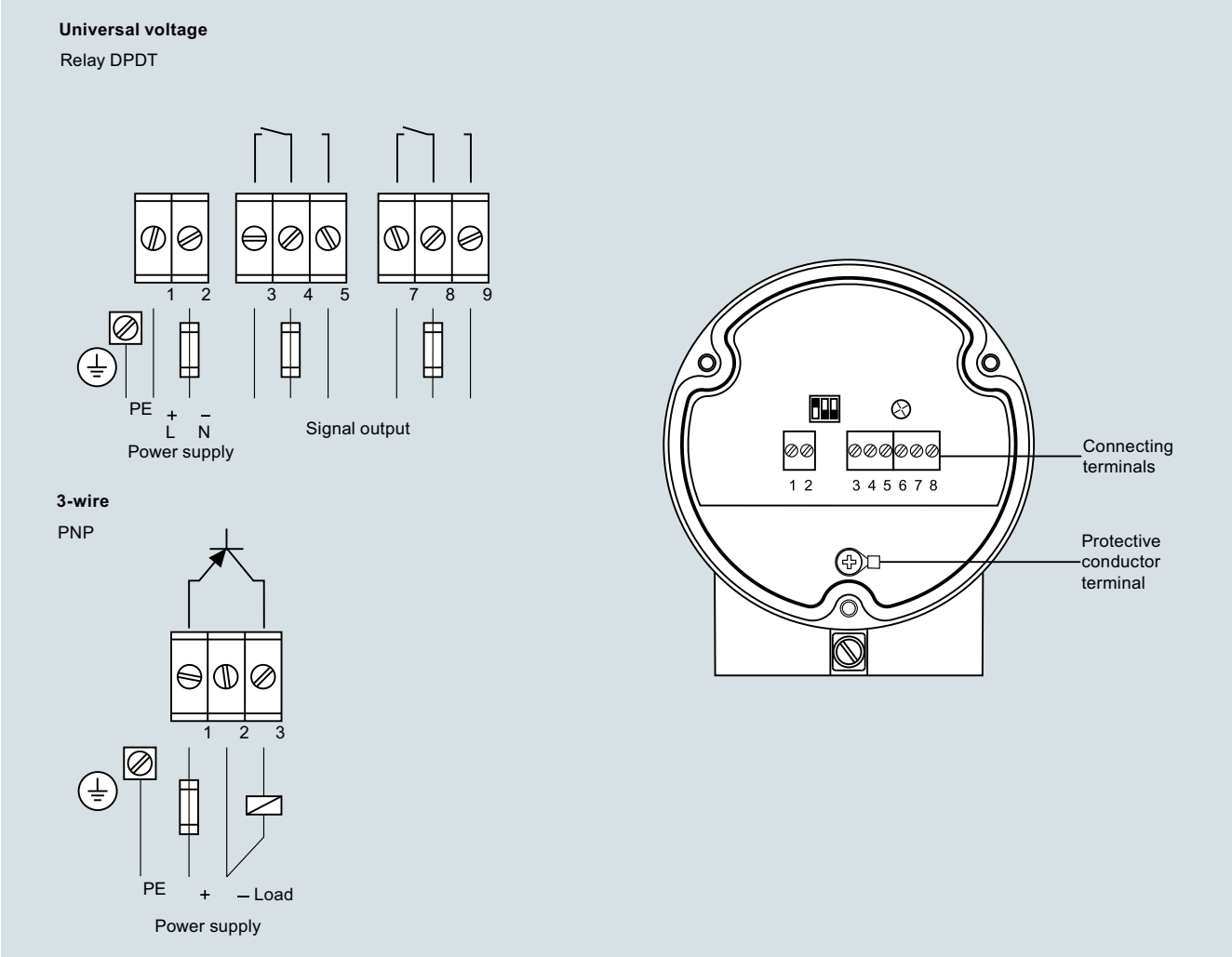

SITRANS LVS300 connections

© Siemens 2020

Overview

SITRANS LPS200 is a rotary paddle switch for point level and material detection in bulk solids.

Benefits

- Proven paddle switch technology for bulk solids
- High integrity mechanical seal
- Universal power supply options available
- Unique friction clutch mechanism prevents damage from falling material
- Rotatable enclosure for convenient wiring
- Optional paddles for use with low density materials
- Small paddle makes for simple installation through existing process connection
- High temperature model and optional extension kit available
- Optional fail-safe configuration detects loss of rotation
- Functional Safety (SIL 2). Device suitable for use in -accordance with IEC 61508 and IEC 61511

Application

The paddle switch technology detects full, empty, or demand conditions on materials such as grain, feed, cement, plastic granulate, and wood chips. The paddle switch can handle bulk densities as low as 15.06 g/l (0.94 lb/ft^3) with the optional rectangular vane or 100 g/l (6.25 lb/ft^3) with the standard measuring vane.

A low revolution geared motor with slip clutch drives a rotating measuring vane which senses the presence of material at the mounted level of the LPS200. As material comes into contact with the rotating paddle, rotation stops, which changes the microswitch state. When the paddle is no longer covered by material, rotation resumes and the relay reverts to its normal condition.

The LPS200 has a rugged design for use in harsh conditions in the solids industry. The sensitivity of the paddle can be adjusted for varying material properties like buildup on the vane.

The LPS200 comes in a variety of configurations including compact, extended and cable extension. It is equipped with a standard vane which is effective in most applications, but can be configured with a hinged or rectangular vane for increased sensitivity for light materials.

- Key Applications: bulk solids such as grain, feed, cement, plastic granulate, wood chips

Technical specifications

Mode of operation	
Measuring principle	Rotating point level switch
Input	
Measured variable	High and low and demand
Output	
Output signal	
• Alarm output	Microswitch 5 A at 250 V AC, non-inductive Microswitch SPDT contact 4 A at 30 V DC, non-inductive
• Pickup delay	Standard (1 rpm model): approx. 1.3 seconds Optional process applications (5 rpm model): approx. 0.26 seconds
Sensitivity	Adjustable via reset force of spring or geometry of measuring vane
Rated operating conditions	
Installation conditions	
• Location	Indoor/outdoor
Ambient conditions	
• Ambient temperature	-25 ... +60 °C (-13 ... +140 °F)
• Storage temperature	-40 ... +80 °C (-40 ... +176 °F)
• Installation category	III
• Pollution degree	2
Medium conditions	Bulk solids
• Temperature	
- Standard	-25 ... +80 °C (-13 ... +176 °F)
- Optional	-25 ... +600 °C (-13 ... +1 112 °F) Higher temperature version is available. Consult a local sales person for details. For more information, please visit http://www.automation.siemens.com/aspa_app.
• Pressure (vessel)	
- Standard	Max. 0.5 bar g (7.25 psi g)
- Optional	Max. 10 bar g (145 psi g)
• Minimum material density	
- Standard measuring vane	Can detect down to 100 g/l (6.25 lb/ft^3)
- Optional measuring vane	Can detect down to 15.06 g/l (0.94 lb/ft^3)
Design	
Material	
• Enclosure	Epoxy coated aluminum
• Process connection, measuring shaft and vane	Stainless steel or aluminum
Process connection	Thread NPT, BSP, and flange options
Degree of protection	IP65/Type 4/NEMA 4
Conduit entry	2 x M20 x 1.5 or 2 x ½" NPT (For FM and CSA approved versions only)
Power supply	
AC or DC versions	115 V AC, ± 15 %, 50 ... 60 Hz, 4 VA or 230 V AC, ± 15 %, 50 Hz, 6 VA, or 48 V AC, or 24 V AC, or 24 V DC, ± 15 %, 2.5 W
Universal voltage (DPDT replay)	24 V DC ± 15 % 50 ... 60 Hz, 22 ... 230 V AC, ± 10 %, max. 10 VA
Certificates and approvals	• CSA/FM General Purpose • CE • CSA/FM Dust Ignition Proof • ATEX II 1/2 D • RCM • IECex

© Siemens 2020

Selection and ordering data

	Article No.														
SITRANS LPS200 Rotary paddle point level switch, compact design ↗	**7ML5725-**														Ord. code
Level detection in solids. Compact, side or top mount with extension options to 300 mm (11.81 inch).	■	■	■	■	■	-	■	■	■	0		■	■	■	
↗ Click on the Article No. for the online configuration in the PIA Life Cycle Portal.															
Process temperature															
Up to 80 °C (176 °F)	1														
Up to 150 °C (302 °F)	2														
Up to 250 °C (482 °F)	3														
Up to 600 °C (1 112 °F)[1)2)]	4														
Up to 80 °C (176 °F) basic version aluminum[1)3)]	5														
Up to 80 °C (176 °F) basic version stainless steel[1)4)]	6														
Power supply															
230 V AC, 1 rev/min.		A													
230 V AC, 5 rev/min.		C													
115 V AC, 1 rev/min.		E													
115 V AC, 5 rev/min.		G													
48 V AC, 1 rev/min.		J													
24 V AC, 1 rev/min.		K													
24 V DC, 1 rev/min.		L													
24 V DC, 5 rev/min.		N													
48 V AC, 5 rev/min.		Z										J	1	B	
24 V AC, 5 rev/min.		Z										J	1	E	
Universal Voltage, 1 rev/min.		Z										J	2	A	
Universal Voltage, 1 rev/min., fail-safe		Z										J	2	B	
Universal Voltage, 5 rev/min.		Z										J	2	C	
Universal Voltage, 5 rev/min. fail-safe		Z										J	2	D	
Process connection															
Threaded															
G 1¼" [(BSPP), EN ISO 228-1]			A												
G 1" [(BSPP), EN ISO 228-1]			B												
G 1½" [(BSPP), EN ISO 228-1]			C												
1" NPT [(Taper), ANSI/ASME B1.20.1]			D												
1¼" NPT [(Taper), ANSI/ASME B1.20.1]			E												
1½" NPT [(Taper), ANSI/ASME B1.20.1]			F												
Flanged															
DN 32 PN 6, EN 1092-1, flat face[5)]			G												
DN 100 PN 6, EN 1092-1, flat face[5)]			H												
DN 100 PN 16, EN 1092-1, flat face			J												
2" ASME 150 lb B16.5, raised face			K												
3" ASME 150 lb B16.5, raised face			L												
4" ASME 150 lb B16.5, raised face			M												
2" Tri-clamp (DN 50) ISO 2852[6)]			N												

	Article No.														
SITRANS LPS200 Rotary paddle point level switch, compact design	**7ML5725-**														Ord. code
Level detection in solids. Compact, side or top mount with extension options to 300 mm (11.81 inch).	■	■	■	■	■	-	■	■	■	0		■	■	■	
Process pressure															
Up to 0.5 bar (7.25 psi)			1												
Up to 5 bar (72.5 psi)			2												
Up to 10 bar (145 psi)			3												
Process connection material															
Aluminum[7)]				1											
Stainless steel, threads 303 (1.4305), flanges 321 (1.4541), Tri-clamp 304 (1.4301)				2											
Stainless steel 316L (1.4404)[8)]				3											
Extension length															
100 mm (3.94 inch)[9)]							1								
150 mm (5.91 inch)							2								
200 mm (7.87 inch)							3								
250 mm (9.84 inch)							4								
300 mm (11.81 inch)							5								
Measuring vane															
Boot shaped, 35 x 106 mm (1.38 x 4.17 inch)[10)]								A							
Hinged vane, 65 x 200 mm (2.56 x 7.87 inch)[10)11)]								B							
Boot shaped, 28 x 98 mm (1.10 x 3.86 inch)								C							
Rectangular, 50 x 150 mm (1.97 x 5.91 inch)[12)]								D							
Rectangular, 50 x 250 mm (1.97 x 9.84 inch)[12)]								E							
Rectangular, 98 x 150 mm (3.86 x 5.91 inch)[11)12)]								F							
Rectangular, 98 x 250 mm (3.86 x 9.84 inch)[11)12)]								G							
Rectangular, 50 x 98 mm (1.97 x 3.86 inch)[12)]								H							
Approvals															
CSA/FM Dust Ignition Proof, RCM									A						
ATEX II ½ D, RCM									B						
CSA/FM General Purpose, RCM, CE									C						
CE, RCM									D						
IEC Ex ta/tb IIIC									E						
EAC Ex ta/tb IIIC Da/Db									F						

© Siemens 2020

Selection and ordering data

	Order code
Further Designs	
Please add "**-Z**" to Article No. and specify Order code(s).	
Heating of enclosure[13)14)]	**A35**
Signal bulb inserted in M20 cable gland[13)]	**A20**
Food grade materials (in contact with process), according to 1935/2004/EC, with FDA conform shaft sealing[15)]	**K01**
Stainless steel tag [100 x 45 mm (3.94 x 1.77 inch)]: Measuring-point number/identification (max. 27 characters); specify in plain text	**Y14**
Functional Safety (SIL 2). Device suitable for use in accordance with IEC 61508 and IEC 61511[17)18)]	**C20**
Factory test certificate - M to DIN 55350, Part 18	**C11**
Operating Instructions	
All literature is available to download for free, in a range of languages, at	

http://www.siemens.com/processinstrumentation/documentation

	Article No.
Spare Parts	
Replacement vane, boot shape, 35 x 106 mm (1.38 x 4.17 inch)	**7ML1830-1KH**
Hinged vane, 98 x 200 mm (3.86 x 7.87 inch)	**7ML1830-1KJ**
Rigid extension kit	
(Includes spring coupling, rigid tube extension, and required pins)	
Extension: 500, 400, 300 mm (19.7, 15.8, 11.8 inch)[16)]	**7ML5711-0AA**
Extension: 1 000, 900, 800, 700, 600 mm (39.4, 35.4, 31.5, 27.6, 23.6 inch)[16)]	**7ML5711-1AA**
Extension: 1 500, 1 400, 1 300, 1 200, 1 100 mm (59.1, 55.1, 51.2, 47.2, 43.3 inch)[16)]	**7ML5711-2AA**
Rope extension kit, 2 m (6.56 ft)	**7ML1830-1KK**
SITRANS LPS200, compact for up to 80 °C (176 °F), aluminum, with power supply E, process connection E, process pressure 1, process connection material 1, extension length 2, measuring vane A, and approval C	**7ML5725-5EE11-2AC0**
SITRANS LPS200, compact for up to 80 °C (176 °F), stainless steel, with power supply Z (J2A), process connection C, process pressure 1, process connection material 2, extension length 2, measuring vane A, and approval B	**7ML5725-6ZC12-2AB0 J2A**
SITRANS LPS200, compact for up to 80 °C (176 °F), stainless steel, with power supply Z (J2A), process connection E, process pressure 1, process connection material 2, extension length 2, measuring vane A, and approval A	**7ML5725-6ZE12-2AA0 J2A**

1) Available with approval options C and D only, up to 0.5 bar.
2) Not available with process connections A, B, D, E, and G.
3) Only available with the following configurations 7ML5725-5AC11-2AD0 or 7ML5725-5EE11-2AC0.
4) Only available with the following configurations 7ML5725-6ZC12-2AB0 J2A or 7ML5725-6ZE12-2AA0 J2A.
5) Available with process pressure options 1 and 2 only.
6) Available with process temperature option 1 only.
7) Available with process connection options A ... F only, process pressure option 1 and process temperature options 1 and 5 only.
8) Available with process connection options C, F, H … N and Measuring vane options A and B.
9) Available with measuring vane options A, C, D, E, H only.
10) Add 16 mm (0.63 inch) to extension length.
11) Available with extension lengths 2, 3, 4, 5.
12) Available with process connection options H … M only.
13) Available with approval option D only.
14) Available with power supply options A, C, E, G, J, K, L, N, J1B, J1D, J1E, J2A, J2C only.
15) Available up to 250 °C (482 °F). This option does not automatically implement a food conform design.
16) Pendulum shaft 500 mm/1 000 mm/1 500 mm should be selected with 150 mm standard length 2 and vane A (35 x 106) to get to the desired lengths.
17) Available with Power supply options J2A and J2C only.
18) Available with Approval options A, B, C, D, and E only. Approvals A and C with FM only.

© Siemens 2020

Selection and ordering data

	Article No. 7ML5726-											Ord. code		
SITRANS LPS200 Rotary paddle point level switch, shaft protected design ↗														
Level detection in aggressive solids. Compact, side or top mount, with enhanced shaft protection. Extension options to 300 mm (11.81 inch).						-								
↗ Click on the Article No. for the online configuration in the PIA Life Cycle Portal.														
Process temperature														
Up to 80 °C (176 °F)	1													
Up to 150 °C (302 °F)	2													
Up to 250 °C (482 °F)	3													
Up to 600 °C (1 112 °F)[1)2)]	4													
Up to 80 °C (176 °F) basic version[3)]	5													
Power supply														
230 V AC, 1 rev/min.		A												
230 V AC, 5 rev/min.		C												
115 V AC, 1 rev/min.		E												
115 V AC, 5 rev/min.		G												
48 V AC, 1 rev/min.		J												
24 V AC, 1 rev/min.		K												
24 V DC, 1 rev/min.		L												
24 V DC, 5 rev/min.		N												
48 V AC, 5 rev/min.		Z										J	1	B
24 V AC, 5 rev/min.		Z										J	1	E
Universal voltage, 1 rev/min.		Z										J	2	A
Universal voltage, 1 rev/min., fail-safe		Z										J	2	B
Universal voltage, 5 rev/min.		Z										J	2	C
Universal voltage, 5 rev/min., fail-safe		Z										J	2	D
Process connection														
Threaded														
G 1¼" [(BSPP), EN ISO 228-1]			A											
G 1½" [(BSPP), EN ISO 228-1]			B											
1¼" NPT [(Taper), ANSI/ASME B1.20.1]			C											
1½" NPT [(Taper), ANSI/ASME B1.20.1]			D											
Flanged														
DN 32 PN 6, EN 1092-1, flat face[4)]			E											
DN 100 PN 6, EN 1092-1, flat face[4)]			F											
DN 100 PN 16, EN 1092-1, flat face			G											
2" ASME 150 lb B16.5, raised face			H											
3" ASME 150 lb B16.5, raised face			J											
4" ASME 150 lb B16.5, raised face			K											
2" Tri-clamp (DN 50) ISO 2852[5)]			L											

	Article No. 7ML5726-											Ord. code		
SITRANS LPS200 Rotary paddle point level switch, shaft protected design														
Level detection in aggressive solids. Compact, side or top mount, with enhanced shaft protection. Extension options to 300 mm (11.81 inch).						-								
Process pressure														
Up to 0.5 bar (7.25 psi)				1										
Up to 5 bar (72.5 psi)				2										
Up to 10 bar (145 psi)				3										
Process connection material														
Aluminum[6)]					1									
Stainless steel, threads 303 (1.4305), flanges 321 (1.4541), Tri-clamp 304 (1.4301)[18)]					2									
Stainless steel 316L (1.4404)[7)]					3									
Extension length														
150 mm (5.91 inch)[8)]							1							
200 mm (7.87 inch)							2							
250 mm (9.84 inch)							3							
300 mm (11.81 inch)							4							
Extension material (protection tube)														
Aluminum[9)]								A						
Stainless steel 303 (1.4305)								B						
Stainless steel 316L (1.4404)[10)]								C						
Measuring vane														
Boot shaped, 35 x 106 mm (1.38 x 4.17 inch)[11)]									A					
Hinged vane, 65 x 200 mm (2.56 x 7.87 inch)[11)12)]									B					
Rectangular, 50 x 150 mm (1.97 x 5.91 inch)[13)]									D					
Rectangular, 50 x 250 mm (1.97 x 9.84 inch)[13)]									E					
Rectangular, 98 x 150 mm (3.86 x 5.91 inch)[12)13)]									F					
Rectangular, 98 x 250 mm (3.86 x 9.84 inch)[12)13)]									G					
Rectangular, 50 x 98 mm (1.97 x 3.86 inch)[13)]									H					
Approvals														
CSA/FM Dust Ignition Proof, RCM										1				
ATEX II ½ D, RCM										2				
CSA/FM General Purpose, RCM, CE										3				
CE, RCM										4				
IEC Ex ta/tb IIIC										5				
EAC Ex ta/tb IIIC Da/Db										6				

© Siemens 2020

Selection and ordering data

	Order code
Further Designs	
Please add "**-Z**" to Article No. and specify Order code(s).	
Heating of enclosure[14)15)]	**A35**
Signal bulb inserted in M20 cable gland[14)]	**A20**
Food grade materials (in contact with process), according to 1935/2004/EC, with FDA conform shaft sealing[16)]	**K01**
Stainless steel tag [100 x 45 mm (3.94 x 1.77 inch)]: Measuring-point number/identification (max. 27 characters); specify in plain text	**Y14**
Functional Safety (SIL 2). Device suitable for use in accordance with IEC 61508 and IEC 61511.[17)19)]	**C20**
Factory test certificate - M to DIN 55350, Part 18	**C11**

	Article No.
Operating Instructions	
All literature is available to download for free, in a range of languages, at	
http://www.siemens.com/processinstrumentation/documentation	
Spare Parts	
Replacement vane, boot shape, 35 x 106 mm (1.38 x 4.17 inch)	**7ML1830-1KH**
Hinged vane, 98 x 200 mm (3.86 x 7.87 inch)	**7ML1830-1KJ**
SITRANS LPS200, extended for up to 80 °C (176 °F), power supply Z (J2A), process connection B, process pressure 1, process connection material 2, extension length 2, extension material B, measuring vane A, and approval 2	**7ML5726-5ZB12-2BA2 J2A**
SITRANS LPS200, extended for up to 80 °C (176 °F), power supply Z (J2A), process connection C, process pressure 1, process connection material 2, extension length 2, extension material B, measuring vane A, and approval 1	**7ML5726-5ZC12-2BA1 J2A**

1) Available with approval options 3 and 4 only and up to max 0.5 bar.
2) Not available with process connection options A, C, E.
3) Only available with the following configurations 7ML5726-5ZB12-2BA2 J2A or 7ML5726-5ZC12-2BA1 J2A.
4) Available with process pressure options 1 and 2 only.
5) Available with process temperature option 1 only.
6) Available with process connection options A ... E only, available with process pressure option 1 only, and process temperature option 1 only.
7) Extension and vane will also change to 316L, only for process connection options B, D, F … L and vane A.
8) Available with measuring vane options A, D, E, H only.
9) Available with process pressure option 1 and process temperature option 1 only.
10) Available with process connection options B, D, F … L and vane A.
11) Add 16 mm (0.63 inch) to extension length.
12) Available with extension length options 2 … 4 only.
13) Available with process connection options F, G, H, J, K only.
14) Available with approval option 4 only.
15) Available with power supply options A, C, E, G, J, K, L, N, J1B, J1D, J1E, J2A, J2C only.
16) Available up to 250 °C (482 °F). This option does not automatically implement a food conform design.
17) Available with Power supply options J2A and J2C only.
18) Available with Extension material Stainless steel, threads 303 option B only.
19) Available with Approval options 1, 2, 3, 4, and 5 only. Approvals 1 and 3 with FM only.

© Siemens 2020

Selection and ordering data

SITRANS LPS200 Rotary paddle point level switch, cable extension design ↗	**7ML5727-**					-				0				Ord. code
Level detection in solids. Top mount, with extension options to 10 m (32.82 ft).	■	■	■	■	■		■	■	■		■	■	■	
↗ Click on the Article No. for the online configuration in the PIA Life Cycle Portal.														
Process temperature														
Up to 80 °C (176 °F)	1													
Up to 150 °C (302 °F)	2													
Up to 250 °C (482 °F)	3													
Up to 600 °C (1 112 °F)[1)2)]	4													
Up to 80 °C (176 °F) basic version[3)]	5													
Power supply														
230 V AC, 1 rev/min.		A												
230 V AC, 5 rev/min.		C												
115 V AC, 1 rev/min.		E												
115 V AC, 5 rev/min.		G												
48 V AC, 1 rev/min.		J												
24 V AC, 1 rev/min.		K												
24 V DC, 1 rev/min.		L												
24 V DC, 5 rev/min.		N												
48 V AC, 5 rev/min.		Z									J	1	B	
24 V AC, 5 rev/min.		Z									J	1	E	
Universal voltage, 1 rev/min.		Z									J	2	A	
Universal voltage, 1 rev/min., fail-safe		Z									J	2	B	
Universal voltage, 5 rev/min.		Z									J	2	C	
Universal voltage, 5 rev/min., fail-safe		Z									J	2	D	
Process connection														
Threaded														
G 1¼" [(BSPP), EN ISO 228-1]			A											
G 1½" [(BSPP), EN ISO 228-1]			B											
1¼" NPT [(Taper), ANSI/ASME B1.20.1]			C											
1½" NPT [(Taper), ANSI/ASME B1.20.1]			D											
Flanged														
DN 32 PN 6, EN 1092-1, flat face[4)]			E											
DN 100 PN 6, EN 1092-1, flat face[4)]			F											
DN 100 PN 16, EN 1092-1, flat face			G											
2" ASME 150 lb B16.5, raised face			H											
3" ASME 150 lb B16.5, raised face			J											
4" ASME 150 lb B16.5, raised face			K											

SITRANS LPS200 Rotary paddle point level switch, cable extension design	**7ML5727-**					-				0				Ord. code
Level detection in solids. Top mount, with extension options to 10 m (32.82 ft).	■	■	■	■	■		■	■	■		■	■	■	
Process pressure														
Up to 0.5 bar (7.25 psi)			1											
Up to 5 bar (72.5 psi)			2											
Up to 10 bar (145 psi)			3											
Process connection material														
Aluminum[5)]				1										
Stainless steel, threads 303 (1.4305), flanges 321 (1.4541)				2										
Cable extension length														
Standard cable length, 2 000 mm (78.74 inch)							0							
Add Order code Y01 and plain text: "Insertion length ... mm"														
500 ... 1 000 mm (19.69 ... 39.37 inch)							1							
Cable length 1 001 ... 2 000 mm (39.41 ... 78.74 inch)							2							
Cable length 2 001 ... 3 000 mm (78.78 ... 118.11 inch)							3							
Cable length 3 001 ... 4 000 mm (118.15 ... 157.48 inch)							4							
Cable length 4 001 ... 5 000 mm (157.52 ... 196.85 inch)							5							
Cable length 5 001 ... 6 000 mm (196.89 ... 236.22 inch)							6							
Cable length 6 001 ... 7 000 mm (236.26 ... 275.59 inch)							7							
Cable length 7 001 ... 10 000 mm (275.63 ... 393.70 inch)							8							
Without extension[12)]							9				N	1	A	
Measuring vane														
Boot shaped, 35 x 106 mm (1.38 x 4.17 inch)[6)]								A						
Hinged vane, 65 x 200 mm (2.56 x 7.87 inch)[6)]								B						
Boot shaped, 28 x 98 mm (1.10 x 3.86 inch)[7)]								C						
Rectangular, 50 x 150 mm (1.97 x 5.91 inch)[7)]								D						
Rectangular, 50 x 250 mm (1.97 x 9.84 inch)[7)]								E						
Rectangular, 98 x 150 mm (3.86 x 5.91 inch)[7)]								F						
Rectangular, 50 x 98 mm (1.97 x 3.86 inch)[7)]								G						
Approvals														
CSA/FM Dust Ignition Proof, RCM									A					
ATEX II ½ D, RCM									B					
CSA/FM General Purpose, RCM, CE									C					
CE, RCM									D					
IEC Ex ta/tb IIIC									E					
EAC Ex ta/tb IIIC Da/Db									F					

© Siemens 2020

Selection and ordering data

	Order code
Further Designs	
Please add "**-Z**" to Article No. and specify Order code(s).	
Total insertion length:	**Y01**
Stainless steel tag [100 x 45 mm (3.94 x 1.77 inch)]: Measuring-point number/identification (max. 27 characters); specify in plain text	**Y14**
Reinforced cable (max. 28 kN pulling force)[8]	**P01**
Heating of enclosure[9][10]	**A35**
Signal bulb inserted in M20 cable gland[9]	**A20**
Food grade materials (in contact with process), according to 1935/2004/EC, with FDA conform shaft sealing[11]	**K01**
Functional Safety (SIL 2). Device suitable for use in accordance with IEC 61508 and IEC 61511.[13][14]	**C20**
Factory test certificate - M to DIN 55350, Part 18	**C11**

	Article No.
Operating Instructions	
All literature is available to download for free, in a range of languages, at	
http://www.siemens.com/processinstrumentation/documentation	
Spare Parts	
Replacement vane, boot shape, 35 x 106 mm (1.38 x 4.17 inch)	**7ML1830-1KH**
Hinged vane, 98 x 200 mm (3.86 x 7.87 inch)	**7ML1830-1KJ**
SITRANS LPS200, cable extension for up to 80 °C (176 °F), power supply Z (J2A), process connection B, process pressure 1, process connection material 2, extension length 0, measuring vane A, and approval B	**7ML5727-5ZB12-0AB0 J2A**
SITRANS LPS200, cable extension for up to 80 °C (176 °F), power supply Z (J2A), process connection C, process pressure 1, process connection material 2, extension length 0, measuring vane A, and approval A	**7ML5727-5ZC12-0AA0 J2A**

1) Available with approval options C and D up to max. 0.5 bar.
2) Not available with process connections A, C, E.
3) Only available with the following configurations 7ML5727-5ZC12-0AA0 J2A or 7ML5727-5ZB12-0AB0 J2A.
4) Available with process pressure options 1 and 2 only.
5) Available with process connections A ... E only, process pressure option 1 only and process temperature options 1 and 5 only.
6) Add 16 mm (0.63 inch) to extension length.
7) Available with process connections F … K only.
8) Available only for process temperature up to 80 °C (176 °F) and process connection material 2.
9) Available with approval option D.
10) Available with power supply options A, C, E, G, J, K, L, N, J1B, J1D, J1E, J2A, J2C only.
11) Available up to 250 °C (482 °F). This option does not automatically implement a food conform design (food conform gaps and radius).
12) Not available with P01 and available with Approval D, mounting kit for rope extension included.
13) Available with Power supply options J2A and J2C only.
14) Available with Approval options A, B, C, D, and E only. Approvals A and C with FM only.

© Siemens 2020

Selection and ordering data

	Article No.													Order code
SITRANS LPS200 Rotary paddle point level switch, angled extension design ↗	**7ML5728-**												Ord. code	
Level detection in aggressive applications. Bottom or side mount with enhanced shaft protection. Extension options to 300 mm (11.81 inch).	■	■	■	■	■	-	■	■	■	**0**		■	■	■	
↗ Click on the Article No. for the online configuration in the PIA Life Cycle Portal.															
Process temperature															
Up to 80 °C (176 °F)	**1**														
Up to 150 °C (302 °F)	**2**														
Up to 250 °C (482 °F)	**3**														
Power supply															
230 V AC, 1 rev/min.		**A**													
230 V AC, 5 rev/min.		**C**													
115 V AC, 1 rev/min.		**E**													
115 V AC, 5 rev/min.		**G**													
48 V AC, 1 rev/min.		**J**													
24 V AC, 1 rev/min.		**K**													
24 V DC, 1 rev/min.		**L**													
24 V DC, 5 rev/min.		**N**													
48 V AC, 5 rev/min.		**Z**										**J**	**1**	**B**	
24 V AC, 5 rev/min.		**Z**										**J**	**1**	**E**	
Universal voltage, 1 rev/min.		**Z**										**J**	**2**	**A**	
Universal voltage, 1 rev/min., fail-safe		**Z**										**J**	**2**	**B**	
Universal voltage, 5 rev/min.		**Z**										**J**	**2**	**C**	
Universal voltage, 5 rev/min., fail-safe		**Z**										**J**	**2**	**D**	
Process connection															
Flanged															
DN 100 PN 6, EN 1092-1, flat face[1]			**A**												
DN 100 PN 16, EN 1092-1, flat face			**B**												
4" ASME 150 lb B16.5, raised face			**C**												
Process pressure															
Up to 0.5 bar (7.25 psi)				**1**											
Up to 5 bar (72.5 psi)				**2**											
Up to 10 bar (145 psi)				**3**											
Process connection material															
Stainless steel 303/321 (1.4305/1.4541)					**1**										
Extension length															
125 mm (4.92 inch)							**1**								
150 mm (5.91 inch)							**2**								
200 mm (7.87 inch)							**3**								
250 mm (9.84 inch)							**4**								
300 mm (11.81 inch)							**5**								
Measuring vane															
Rectangular vane, 50 x 98 mm (1.97 x 3.86 inch)								**A**							
Rectangular vane, 50 x 150 mm (1.97 x 5.91 inch)								**B**							
Rectangular vane, 50 x 250 mm (1.97 x 9.84 inch)								**C**							
Rectangular vane, 98 x 150 mm (3.86 x 5.91 inch)								**D**							
Rectangular vane, 98 x 250 mm (3.86 x 9.84 inch)								**E**							
Hinged vane, 65 x 200 mm (2.56 x 7.87 inch)								**F**							
Approvals															
CSA/FM Dust Ignition Proof, RCM									**A**						
ATEX II ½ D, RCM									**B**						
CSA/FM General Purpose, RCM, CE									**C**						
CE, RCM									**D**						
IEC Ex ta/tb IIIC									**E**						
EAC Ex ta/tb IIIC Da/Db									**F**						

Further Designs	
Please add "**-Z**" to Article No. and specify Order code(s).	
Heating of enclosure[2)3)]	**A35**
Signal bulb inserted in M20 cable gland[2)]	**A20**
Food grade materials (in contact with process), according to 1935/2004/EC, with FDA conform shaft sealing[4)]	**K01**
Stainless steel tag [100 x 45 mm (3.94 x 1.77 inch)]: Measuring-point number/identification (max. 27 characters); specify in plain text	**Y14**
Functional Safety (SIL 2). Device suitable for use in accordance with IEC 61508 and IEC 61511.[5)6)]	**C20**
Factory test certificate - M to DIN 55350, Part 18	**C11**
Operating Instructions	Article No.
All literature is available to download for free, in a range of languages, at	
http://www.siemens.com/processinstrumentation/documentation	
Spare Parts	
Replacement vane, boot shape, 35 x 106 mm (1.38 x 4.17 inch)	**7ML1830-1KH**
Hinged vane, 98 x 200 mm (3.86 x 7.87 inch)	**7ML1830-1KJ**

1) Available with process pressure options 1 and 2 only.
2) Available with Approval option D only.
3) Available with Power supply options A ,C, E, G, J, K, L, N, J1B, J1D, J1E, J2A, J2C only.
4) This option does not automatically implement a food conform design.
5) Available with Power supply options J2A and J2C only.
6) Available with Approval options A, B, C, D, and E only. Approvals A and C with FM only.

© Siemens 2020

Selection and ordering data

SITRANS LPS200 Rotary paddle point level switch, rigid extension design ↗	**7ML5730-**											Ord. code		
Level detection in solids. Top mount, with extension options to 4 m (13.12 ft).	■	■	■	■	■	-	■	■	■	■		■	■	■
↗ Click on the Article No. for the online configuration in the PIA Life Cycle Portal.														
Process temperature														
Up to 80 °C (176 °F)	1													
Up to 150 °C (302 °F)	2													
Up to 250 °C (482 °F)	3													
Up to 600 °C (1 112 °F)[1)2)]	4													
Power supply														
230 V AC, 1 rev/min.		A												
230 V AC, 5 rev/min.		C												
115 V AC, 1 rev/min.		E												
115 V AC, 5 rev/min.		G												
48 V AC, 1 rev/min.		J												
24 V AC, 1 rev/min.		K												
24 V DC, 1 rev/min.		L												
24 V DC, 5 rev/min.		N												
48 V AC, 5 rev/min.		Z										J	1	B
24 V AC, 5 rev/min.		Z										J	1	E
Universal voltage, 1 rev/min.		Z										J	2	A
Universal voltage, 1 rev/min., fail-safe		Z										J	2	B
Universal voltage, 5 rev/min.		Z										J	2	C
Universal voltage, 5 rev/min., fail-safe		Z										J	2	D
Process connection														
Threaded														
G 1¼" [(BSPP), EN ISO 228-1]			A											
G 1½" [(BSPP), EN ISO 228-1]			B											
1¼" NPT [(Taper), ANSI/ASME B1.20.1]			C											
1½" NPT [(Taper), ANSI/ASME B1.20.1]			D											
Flanged														
DN 32 PN 6, EN 1092-1, flat face[3)]			E											
DN 100 PN 6, EN 1092-1, flat face[3)]			F											
DN 100 PN 16, EN 1092-1, flat face			G											
2" ASME 150 lb B16.5, raised face			H											
3" ASME 150 lb B16.5, raised face			J											
4" ASME 150 lb B16.5, raised face			K											
2" Tri-clamp 2 (DN 50) ISO 2852[4)]			L											
Process pressure														
Up to 0.5 bar (7.25 psi)				1										
Up to 5 bar (72.5 psi)				2										
Up to 10 bar (145 psi)				3										
Process connection material														
Aluminum[5)]					1									
Stainless steel, threads 303 (1.4305), flanges 321 (1.4541), Tri-clamp 304 (1.4301)					2									
Stainless steel 316L (1.4404)[6)]					3									
Extension material (protection tube)														
Aluminum[7)8)]							0							
Stainless steel 303 (1.4305)[9)]							1							
Stainless steel 316L (1.4404)[10)11)22)]							2							

SITRANS LPS200 Rotary paddle point level switch, rigid extension design	**7ML5730-**											Ord. code		
Level detection in solids. Top mount, with extension options to 4 m (13.12 ft).	■	■	■	■	■	-	■	■	■	■		■	■	■
Extension length														
Aluminum														
250 ... 500 mm (9.84 ... 19.69 inch)								A						
501 ... 750 mm (19.72 ... 29.53 inch)								B						
751 ... 1 000 mm (29.57 ... 39.37 inch)								C						
1 001 ... 1 250 mm (39.41 ... 42.21 inch)								D						
1 251 ... 1 500 mm (49.25 ... 59.06 inch)								E						
1 501 ... 1 750 mm (59.09 ... 68.90 inch)								F						
1 751 ... 2 000 mm (68.94 ... 78.74 inch)								G						
2 001 ... 2 250 mm (78.78 ... 88.58 inch)								H						
2 251 ... 2 500 mm (88.62 ... 98.43 inch)								J						
2 501 ... 2 750 mm (98.46 ... 108.27 inch)								K						
2 751 ... 3 000 mm (108.31 ... 118.11 inch)								L						
3 001 ... 3 250 mm (118.15 ... 127.95 inch)								M						
3 251 ... 3 500 mm (127.99 ... 137.80 inch)								N						
3 501 ... 3 750 mm (137.83 ... 147.64 inch)								P						
3 751 ... 4 000 mm (147.67 ... 157.48 inch)								Q						
Stainless steel 303 (1.4305)														
250 ... 500 mm (9.84 ... 19.69 inch)								R						
501 ... 750 mm (19.72 ... 29.53 inch)								S						
751 ... 1 000 mm (29.57 ... 39.37 inch)								T						
1 001 ... 1 500 mm (39.41 ... 59.05 inch)								U						
1 501 ... 2 000 mm (59.09 ... 78.74 inch)								V						
2 001 ... 2 500 mm (78.78 ... 98.42 inch)								W						
2 501 ... 3 000 mm (98.46 ... 118.11 inch)								X						
3 001 ... 4 000 mm (118.15 ... 157.48 inch)								Y						
Stainless steel 316L (1.4404)														
250 ... 500 mm (9.84 ... 19.69 inch)								Z				P	1	A
501 ... 750 mm (19.72 ... 29.53 inch)								Z				P	1	B
751 ... 1 000 mm (29.57 ... 39.37 inch)								Z				P	1	C
1 001 ... 1 500 mm (39.41 ... 59.05 inch)								Z				P	1	D
1 501 ... 2 000 mm (59.09 ... 78.74 inch)								Z				P	1	E
2 001 ... 2 500 mm (78.78 ... 98.42 inch)								Z				P	1	F
2 501 ... 3 000 mm (98.46 ... 118.11 inch)								Z				P	1	G
3 001 ... 4 000 mm (118.5 ... 157.48 inch)								Z				P	1	H
Measuring vane														
Boot shaped, 35 x 106 mm (1.34 x 4.17 inch)[12)]									A					
Hinged vane, 65 x 200 mm (2.56 x 7.87 inch)[12)]									B					
Rectangular, 50 x 150 mm (1.97 x 5.91 inch)[13)]									C					
Rectangular, 50 x 250 mm (1.97 x 9.84 inch)[13)]									D					
Rectangular, 98 x 150 mm (3.86 x 5.91 inch)[13)]									E					
Rectangular, 98 x 250 mm (3.86 x 9.84 inch)[13)]									F					
Rectangular, 50 x 98 mm (1.97 x 3.86 inch)[13)]									G					
Approvals														
CSA/FM Dust Ignition Proof, RCM										1				
ATEX II ½ D, RCM										2				
CSA/FM General Purpose, RCM, CE										3				
CE, RCM										4				
IEC Ex ta/tb IIIC										5				
EAC Ex ta/tb IIIC Da/Db										6				

© Siemens 2020

Selection and ordering data

	Order code
Further Designs	
Please add "**-Z**" to Article No. and specify Order code(s).	
Total insertion length: Enter the total insertion length in plain text description, max. 4 000 mm (157.48 inch)	**Y01**
Stainless steel tag [100 x 45 mm (3.94 x 1.77 inch)]: Measuring-point number/identification (max. 27 characters); specify in plain text	**Y14**
Heating of enclosure[14)15)]	**A35**
Signal bulb inserted in M20 cable gland[14)]	**A20**
Food grade materials (in contact with process), according to 1935/2004/EC, with FDA conform shaft sealing[16)17)]	**K01**
Functional Safety (SIL 2). Device suitable for use in accordance with IEC 61508 and IEC 61511.[20)21)]	**C20**
Factory test certificate - M to DIN 55350, Part 18	**C11**
Optional end of shaft seal for stability and ingress protection	
Max. temperature 80 °C (176 °F)	**P06**
Max. temperature 150 °C (302 °F)	**P07**
Max. temperature 250 °C (482 °F)	**P08**
Max. temperature 600 °C (1 112 °F)	**P09**
Sliding sleeve: standard, max. pressure 0.5 bar[14)18)]	**P12**
Sliding sleeve: pressure tight, for over-pressure application, dependent on pressure option ordered)[19)]	**P13**

	Article No.
Operating Instructions	
All literature is available to download for free, in a range of languages, at	
http://www.siemens.com/processinstrumentation/documentation	
Spare Parts	
Replacement vane, boot shape, 35 x 106 mm (1.38 x 4.17 inch)	**7ML1830-1KH**
Hinged vane, 98 x 200 mm (3.86 x 7.87 inch)	**7ML1830-1KJ**

1) Available with approval options 3 and 4, up to max 0.5 bar.
2) Not available with process connections A, C, E.
3) Available with process pressure options 1 and 2 only.
4) Available with process temperature 1 only.
5) Available with process connections A ... E only, with process pressure option 1 and process temperature option 1 only.
6) Available with process connection options B, D, F … L and measuring vane option A.
7) Available with process pressure 1 and process temperature 1 only.
8) Available with extension length options A … Q only.
9) Available with extension length options R … Y only.
10) Available with process connection options B, D, F … L and measuring vane A, process connection material 3. Available only with extension length options P1A … P1H only.
11) Only available with seal at tube end options P06 … P09.
12) Add 16 mm (0.63 inch) to extension length.
13) Available with process connections F, G, H, J, K only.
14) Available with approval option 4 only.
15) Available with power supply options A, C, E, G, J, K, L, N, J1B, J1D, J1E, J2A, J2C only.
16) Available when ordered with ingress protection seal options P06 … P09 only.
17) Available up to 250 °C (482 °F). This option does not automatically implement a food conform design.
18) Available with process pressure option 1 only.
19) Available up to 250 °C (482 °F).
20) Available with Power supply options J2A and J2C only.
21) Available with Approval options 1, 2, 3, 4, and 5 only. Approvals 1 and 3 with FM only.
22) Internal probe construction is 1.4305, add seal option P09 to prevent ingress.

© Siemens 2020

Dimensional drawings

Standard model: compact version

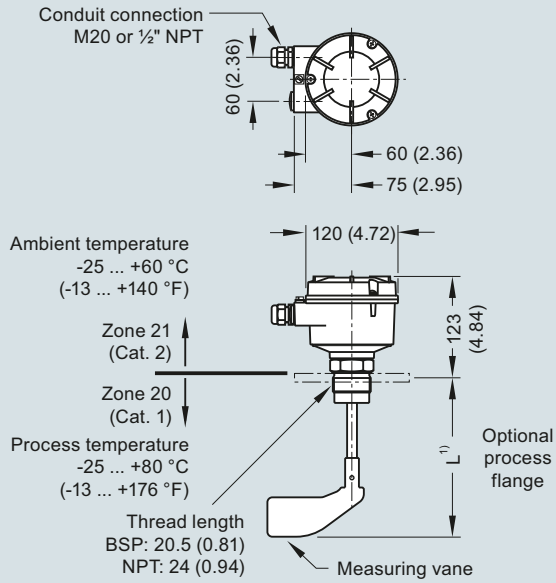

High temperature model: compact version

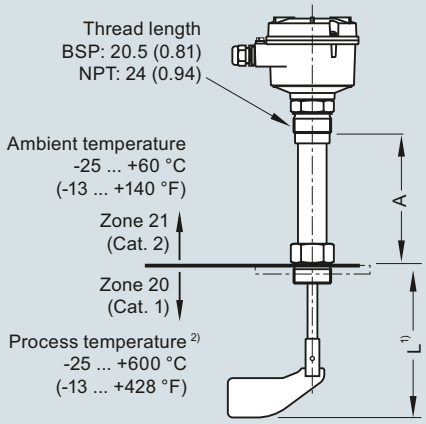

Process temperature	A
150/250 °C (302/482 °F)	200 (7.87)
350 °C (662 °F)	300 (11.81)
600 °C (1 112 °F)	400 (15.74)

L= Length
100 (3.94)
150 (5.91)
200 (7.87)
250 (9.84)
300 (11.81)

Shaft protected option

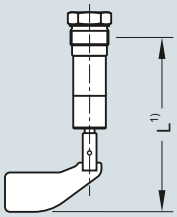

Angle option

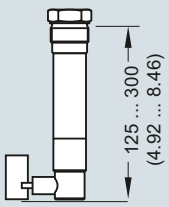

Rope option

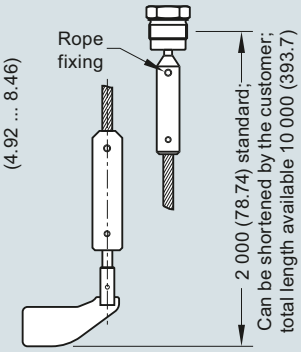

Measuring vanes

Standard

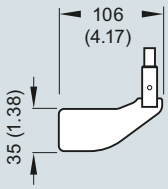

Hinged

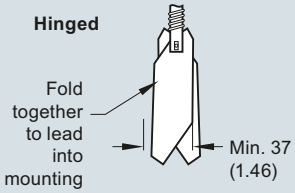

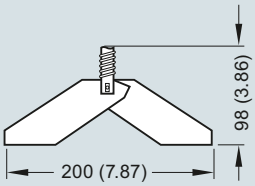

Rectangular

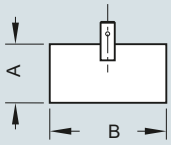

Rectangular vane options

A	B
50 (1.97)	98 (3.86)
50 (1.97)	150 (5.90)
50 (1.97)	250 (9.84)
98 (3.86)	150 (5.90)
98 (3.86)	250 (9.84)

Vane	Completely covered with material		Covered up to 10 cm (3.93 inch) with material	
	Spring adjustment		Spring adjustment	
	Light	Central (factory setting)	Light	Central (factory setting)
Boot shaped 35 x 106 mm	200 g/l (12.5 lb/ft³)	300 g/l (18.7 lb/ft³)	100 g/l (6.2 lb/ft³)	150 g/l (9.4 lb/ft³)
Boot shaped 28 x 98 mm	300 g/l (18.7 lb/ft³)	500 g/l (31.2 lb/ft³)	150 g/l (9.4 lb/ft³)	150 g/l (9.4 lb/ft³)
Rectangular 50 x 98 mm	300 g/l (18.7 lb/ft³)	500 g/l (31.2 lb/ft³)	150 g/l (9.4 lb/ft³)	250 g/l (15.6 lb/ft³)
Rectangular 50 x 150 mm	80 g/l (5.0 lb/ft³)	120 g/l (7.5 lb/ft³)	40 g/l (2.5 lb/ft³)	60 g/l (3.7 lb/ft³)
Rectangular 50 x 250 mm	30 g/l (1.9 lb/ft³)	50 g/l (3.1 lb/ft³)	15 g/l (0.9 lb/ft³)	25 g/l (1.6 lb/ft³)
Rectangular 98 x 150 mm	30 g/l (1.9 lb/ft³)	50 g/l (3.1 lb/ft³)	15 g/l (0.9 lb/ft³)	25 g/l (1.6 lb/ft³)
Rectangular 98 x 250 mm	20 g/l (1.2 lb/ft³)	30 g/l (1.9 lb/ft³)	15 g/l (0.9 lb/ft³)	15 g/l (0.9 lb/ft³)
Hinged 98 x 200 mm	70 g/l (4.4 lb/ft³)	100 g/l (6.2 lb/ft³)	35 g/l (2.2 lb/ft³)	50 g/l (3.1 lb/ft³)

1. For 35 x 106 mm boot shaped and 98 x 200 mm hinged measuring vanes, add 16 mm to extension length.
2. For use with all approval options except CSA class II. See manual for more details.

Notes
For heavy material, only top mounting of paddle switch is recommended.
Compact LPS200 is recommended for side mounting on bins for low or intermediate material levels.

SITRANS LPS200, dimensions in mm (inch)

© Siemens 2020

Circuit diagrams

AC or DC version

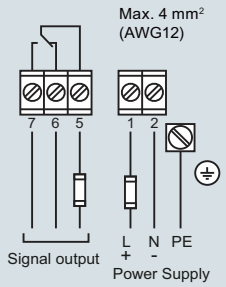

Universal voltage (DPDT relay)*

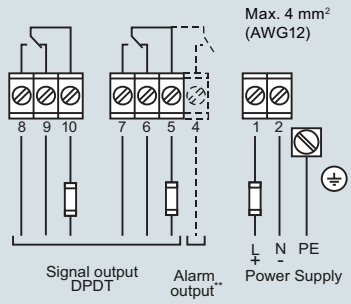

* See manual for universal voltage with SIL.

** With option Fail safe alarm (rotation control).
Contact open when de-energised.
Fail safe alarm switching and timing behaviour:
If the vane is not covered, the rotating vane shaft will send pulses at 20 second intervals.
In case of fault, the pulses are missed.
After 30 seconds, the alarm relay will open.

Power supply:

AC version:
24 V or 48 V or 115 V or 230 V 50/60 Hz max. 4 VA
All voltages ± 10 %[1)]
Supply voltage as selected.
External fuse: max 10 A, fast or slow, HBC, 250 V

DC version:
24 V DC ± 15 %[1)] max. 2.5 W
External fuse: not required

[1)] Including ±10% of EN 61010

Signal output:
Micro switch, SPDT contact
max. 250 V AC, 5 A, non inductive
max. 30 V DC, 4 A, non inductive
External fuse: max 10 A, fast or slow, HBC, 250 V

Signal output: delay

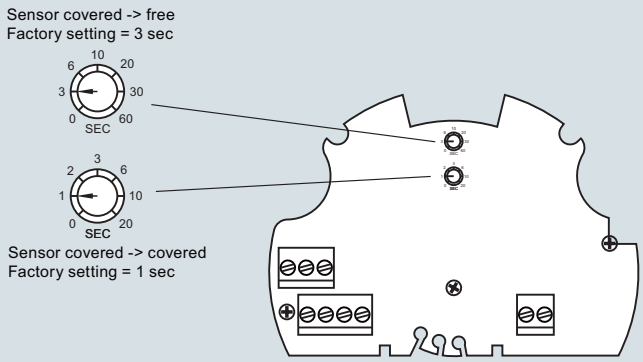

SITRANS LPS200 connections

© Siemens 2020

Benefits

- 2 switch outputs for high-high, high, low, and low-low level alarms or pump up/pump down control
- Integral temperature compensation
- AC or DC power supply
- Electronics provided with fail-safe function
- Threaded and sanitary fitting clamp process connections
- Polycarbonate enclosure, Type 6/NEMA 6/IP67
- Easy, two-button programming

Application

The measuring range for bulk solids is max. 3 m (9.8 ft) and 5 m (16.4 ft) for liquids and slurries. Unlike invasive contacting devices, there is no material buildup on the sensor.

The level switch has a rugged design, combining the transducer and electronics in one durable device. It has no moving parts and is virtually maintenance-free.

The transducer, available in ETFE or PVDF copolymer, is inert to most chemicals. This means the device can be used in the chemical, petrochemical, water, and wastewater industries. A sanitary version of the ULS200, with an industry standard flange option, is easy to remove from the application for cleaning. It thus satisfies the prerequisites for use in the food, beverage, and pharmaceutical industries. The Pointek ULS200 delivers superior performance while reducing maintenance, downtime, and equipment replacement costs.

- Key Applications: liquids, slurries, fluid materials, plugged chute detection, chemical industry

Design

Installation

The Pointek ULS200 should be mounted in an area that is within the temperature range specified and that is suitable to the enclosure rating and materials of construction. The cover should be accessible to allow programming, wiring and display viewing.

It is advisable to keep the Pointek ULS200 away from high voltage or current runs, contactors and SCR control drives.

Locate the Pointek ULS200 so that it has a clear sound path perpendicular to the material surface. The sound path should not intersect the fill path, rough walls, seams, rungs etc.

Mounting and Interconnection

The Pointek ULS200 is available in three thread types: 2" NPT, R 2" (BSPT), EN 10226 or PF2 and can be fitted with the optional 75 mm (3 inch) flange adapter for mating to 3" ASME, DN 65, PN 10, and JIS 10K 3B sized flanges.

Separate cables and conduit may be required to conform to standard instrumentation wiring or electrical codes.

Configuration

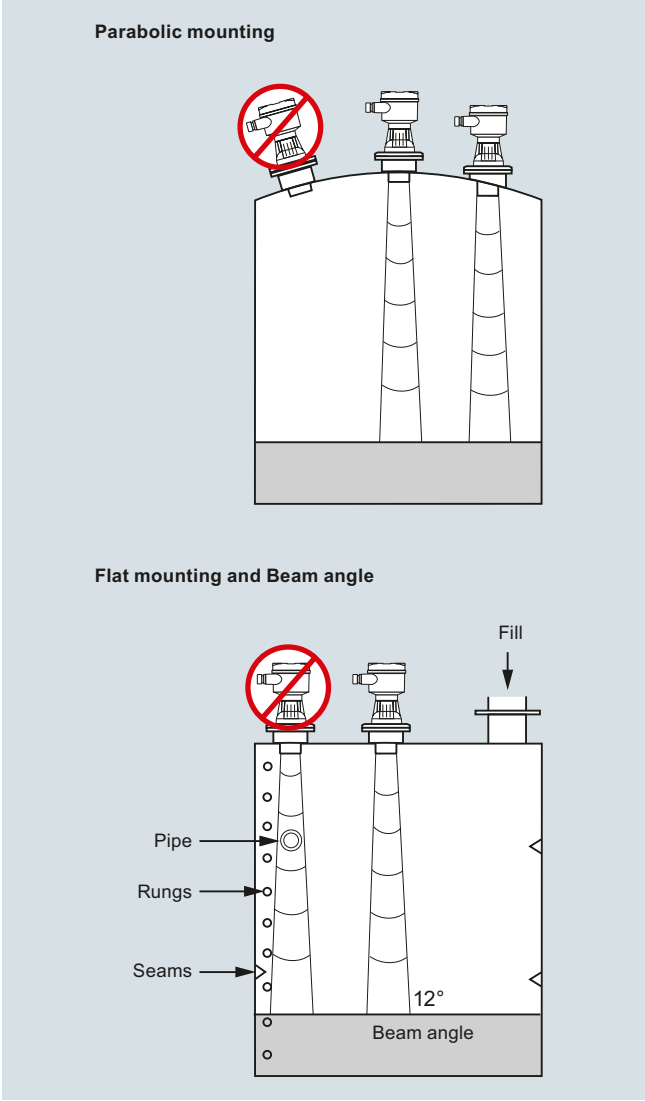

Pointek ULS200 mounting

© Siemens 2020

Technical specifications

Mode of operation	
Measuring principle	Ultrasonic level switch
Measuring range	
Measuring range in liquids	0.25 ... 5 m (0.8 ... 16.4 ft)
Measuring range in bulk solids	0.25 ... 3 m (0.8 ... 9.8 ft)
Output	
AC Version (relay)	2 SPDT Form C contacts, rated 5 A at 250 V AC or 30 V DC, resistive load; rated 1 A at 48 V DC resistive load
DC Version (relay)	2 SPDT Form C contacts, rated 5 A at 30 V DC, resistive load; rated 1 A at 48 V DC resistive load
DC Version (transistor)	2 switches, rated max. 100 mA, 48 V DC
Accuracy	
AC/DC version	
• Resolution	3 mm (0.1 inch)
• Repeatability	0.25 % of measuring range
Rated operation conditions	
Installation conditions	
• Location	Indoors/outdoors
• Beam angle	12°
Ambient conditions	
• Ambient temperature	-40 ... +60 °C (-40 ... +140 °F)
• Storage temperature	-40 ... +60 °C (-40 ... +140 °F)
• If mounted in metal threads	-20 ... +60 °C (-5 ... +140 °F)
Medium conditions	
• Process pressure	0.5 bar (7.25 psi) max.

Design	
Material	Polycarbonate with gasket
Weight	Approx. 1.5 kg (3.3 lb)
Transducer material	PVDF or ETFE copolymer
Threaded mounting	2" NPT [(Taper), ANSI/ASME B1.20.1] R 2" [(BSPT), EN 10226] or G 2" [(BSPP), EN ISO 228-1]
• Optional flange adapter	For 3" ASME, DN 65, PN 10, and JIS 10 K3B
Sanitary mounting	4" sanitary fitting clamp
Power supply	
AC version	100 ... 230 V AC, ± 15 %, 50/60 Hz, max. 12 VA, 5 W
DC version	18 ... 30 V DC, 3 W
Displays and controls	
Display	LCD, three digits, 9 mm (0.35 inch) high, for display of distance between sensor face and material, multi-segment graphic for operating state
Memory	EEPROM, non-volatile
Programming	2 keys
Electronics/enclosure	Connection: terminal block, max. 2.5 mm^2 (14 AWG) solid/1.5 mm^2 (16 AWG) stranded
Degree of protection	IP67/Type 6/NEMA 6
Cable inlet	2 x ½" NPT or 2 x PG 13.5
Certificates and approvals	CE, CSA $_{US/C}$, FM

© Siemens 2020

Selection and ordering data

	Article No.
Pointek ULS200 Ultrasonic point level switch ↗	**7ML1510-**
Non-contact, 5 m (16.4 ft) range, for bulk solids, liquids, and slurries.	■ ■ ■ **0** ■
↗ Click on the Article No. for the online configuration in the PIA Life Cycle Portal.	
Power supply	
24 V DC, relay output	**1**
24 V DC, transistor output	**2**
100 ... 230 V AC, relay output	**3**
Approvals	
CE, RCM, CSA Class I, II, Div. 2[1]	**J**
CE, RCM, $CSA_{us/c}$, FM	**K**
Transducer/Process connection	
ETFE, 2" NPT [(Taper), ANSI/ASME B1.20.1]	**A**
EFTE, R 2" [(BSPT), EN 10226]	**B**
EFTE, G 2" [(BSPP), EN ISO 228-1]	**C**
PVDF copolymer, 2" NPT [(Taper), ANSI/ASME B1.20.1]	**E**
PVDF copolymer, R 2" [(BSPT), EN 10226]	**F**
PVDF copolymer, G [(BSPP), EN ISO 228-1]	**G**
PVDF copolymer, 4" sanitary mounting[2]	**J**
Enclosure/cable inlet	
Polycarbonate	
• Cable inlet PG 13.5	**1**
• Cable inlet ½" NPT	**2**

[1] Available with Enclosure/cable inlet option 2 only.

[2] Available with Approvals option K only.

Further designs	Order code
Please add "**-Z**" to Article No. and specify Order code(s)	
Stainless steel tag [69 x 50 mm (2.71 x 1.97 inch)]: Measuring-point number/identification (max. 27 characters) specify in plain text	**Y15**
Operating Instructions	
All literature is available to download for free, in a range of languages, at	

http://www.siemens.com/processinstrumentation/documentation

Accessories	Article No.
Tag, stainless steel, 12 x 45 mm (0.47 x 1.77 inch), one text line, suitable for enclosures	**7ML1930-1AC**
Universal Box Bracket Mounting Kit	**7ML1830-1BK**
3" ASME, DN 65 PN 10, JIS 10K 3B ETFE Flange adapter for 2" NPT	**7ML1830-1BT**
3" ASME, DN 65 PN 10, JIS 10K 3B ETFE Flange adapter for 2" BSPT	**7ML1830-1BU**
2" BSP nylon plastic locknut	**7ML1830-1DQ**
2" NPT nylon plastic locknut	**7ML1830-1DT**
4" sanitary mounting clamp	**7ML1830-1BR**
Spare Parts	
Polycarbonate Lid	**7ML1830-1LG**

Options

Flange adapter for mating 2" NPT or 2" BSP process connections to 3" ASME, DN 65 PN 10 and JIS 10K 3B flanges

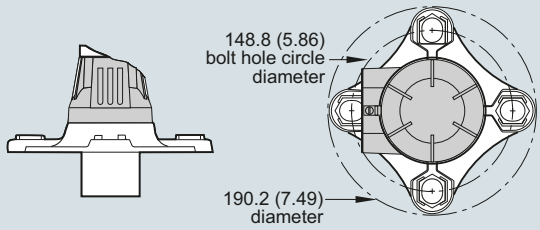

Pointek ULS200 optional flange adapter, dimensions in mm (inch)

© Siemens 2020

Dimensional drawings

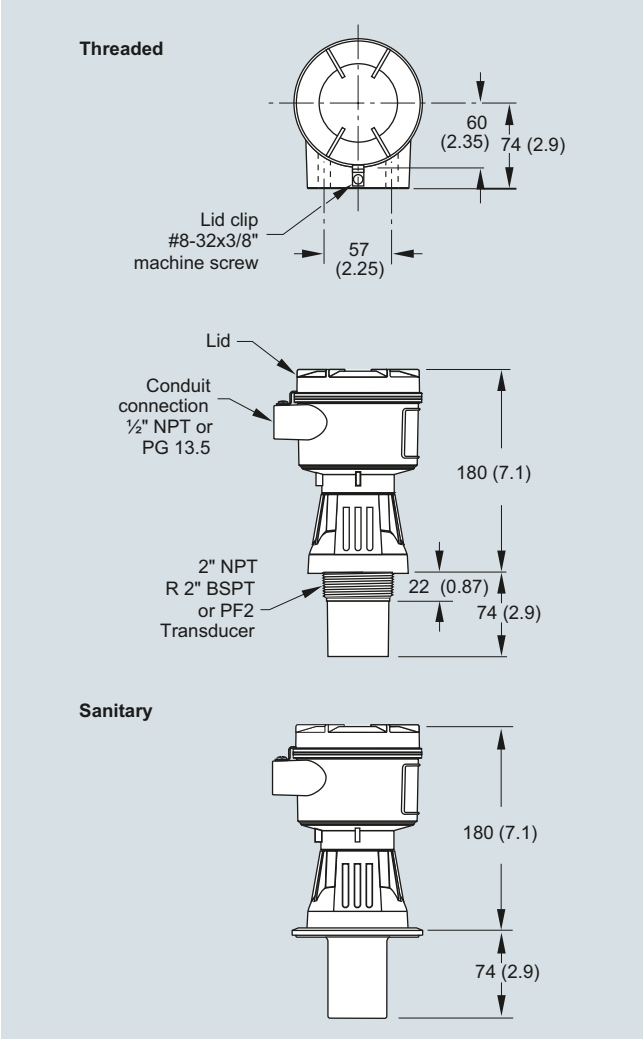

Pointek ULS200, dimensions in mm (inch)

Circuit diagrams

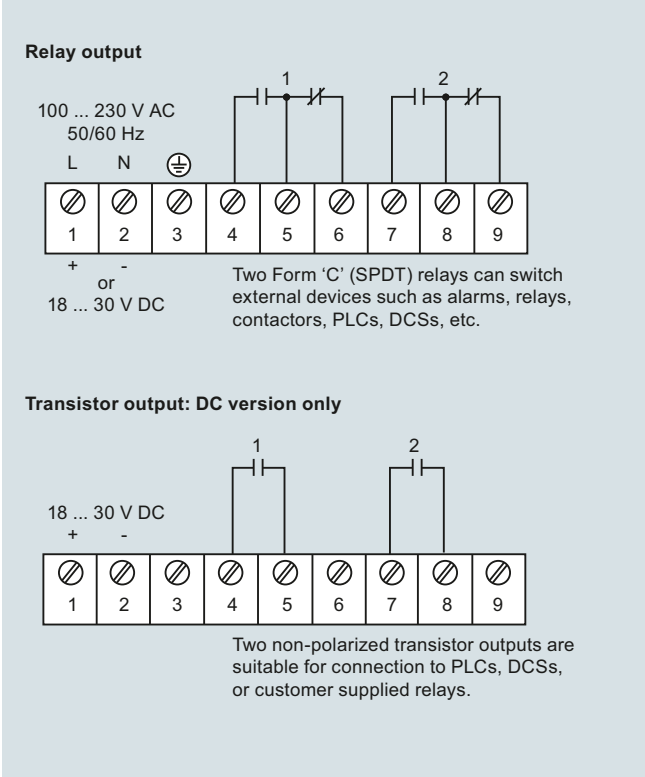

Pointek ULS200 connections

© Siemens 2020

Overview

After driving the market in ultrasonic level controllers for the past 40 years, Siemens has evolved its industry leading solutions to include control for 80 GHz radar sensors.

Siemens level controller portfolio provides high-accuracy open channel monitoring, flexible control for multiple-relay ultrasonics, and reliable controllers for long-range, high frequency radar.

Technical specifications

Controller Selection Guide

Criteria	SITRANS LT500	SITRANS LUT400	HydroRanger 200	MultiRanger 100/200
Range	Sensor dependent	0.3 ... 60 m (1 ... 196 ft), transducer and application dependent	15 m (50 ft) transducer and application dependent	15 m (50 ft) transducer and application dependent
Typical applications	Single or dual point, wet wells, reservoirs, flumes/weirs, chemical storage, liquid storage, hoppers, crusher bins, dry solids storage	Wet wells, reservoirs, flumes/weirs, chemical storage, liquid storage, hoppers, crusher bins, dry solids storage	Wet wells, flumes/weirs, bar screen control	Wet wells, flumes/weirs, bar screen control, hoppers, chemical storage, liquid storage, crusher bins, dry solids storage
Output	1, 3, 6 relays, two 4 ... 20 mA outputs (isolated)	4 ... 20 mA/HART 3 relays	6 relays standard, two 4 ... 20 mA outputs (isolated)	1 relay (option on MultiRanger 100) 3 relays standard 6 relays (option) Two 4 ... 20 mA outputs (isolated)
Communications	Options: • HART (additional 4 ... 20 mA output) • PROFIBUS PA • PROFIBUS DP • Modbus RTU	HART 7.0, USB, SIMATIC PDM	Built-in Modbus RTU/ASCII via RS 485 Options: • SIMATIC PDM • SmartLinx (PROFIBUS DP, DeviceNet)	• Built-in Modbus RTU or ASCII via RS 485 • Options: • SIMATIC PDM • SmartLinx (PROFIBUS DP, DeviceNet)
Power specifications	AC version: 100 ... 230 V AC ± 15 %, 50/60 Hz, 36 VA/17 W DC version: 12 ... 30 V DC, 20 W	AC version: 100 ... 230 V AC ± 15 %, 50/60 Hz, 36 VA Fuse: 5 x 20 mm, Slow Blow, 0.25 A, 250 V DC version: 10 … 32 V DC, 10 W Fuse: 5 x 20 mm, Slow Blow, 1.6 A, 125 V	AC version: 100 ... 230 V AC ± 15 %, 50/60 Hz, 36 VA/17 W DC version: 12 ... 30 V DC, 20 W	AC version: 100 ... 230 V AC ± 15 %, 50/60 Hz, 36 VA/17 W DC version: 12 ... 30 V DC, 20 W
Approvals	CE, $CSA_{US/C}$, UL Listed, FM, RCM	CE, $CSA_{US/C}$, UL Listed, FM, RCM, LR, ABS, MCERTS	CE, $CSA_{US/C}$, UL Listed, FM, RCM, MCERTS	CE, $CSA_{US/C}$, UL Listed, FM, RCM

© Siemens 2020

Overview

SITRANS LT500 is a versatile, single and multi-vessel level monitor/controller for virtually any application in a wide range of industries.

Benefits

- Easy to use HMI display with local four-button programming, menu-driven parameters, and Wizard support for key applications.
- English, German, French, Spanish, Chinese, Italian, Portuguese, Japanese, Danish, Dutch, Swedish, Finnish, Polish, and Russian texts on the HMI.
- Removable terminal blocks for ease of wiring.
- Digital input for back-up level override from point level device.
- Communication options for HART, Modbus RTU, PROFIBUS PA, PROFIBUS DP and ProfiNet.
- Single or dual point level monitoring.
- Auto False-Echo Suppression for fixed obstruction avoidance.
- Up to 6 independent programmable relays for pump control, alarms, or remote totalization.
- Level, volume, and flow measurements in open channels, differential control, extended pump control, and alarm functions.
- Wall and panel mounting options.

Application

SITRANS LT500 can be used with SITRANS LR110, LR120, Probe LU240 or any level device generating a mA signal. SITRANS LT500 offers true dual point monitoring and digital communications. SITRANS LT500 is low maintenance and economical. With its advanced control functions, it can operate pumps during lower cost time periods and manage pump rosters for efficiency.

SITRANS LT500 will monitor open channel flow and features advanced relay alarming and pump control functions as well as volume conversion.

- Key Applications: wet wells, flumes/weirs, bar screen control, hoppers, chemical storage, liquid storage, crusher bins, dry solids storage

Design

SITRANS LT500 is available in wall or panel mounting options.

© Siemens 2020

Technical specifications

Sensor input	
Number of inputs	1 or 2
Terminal voltage	Max. 26 V, Min. 18 V (0 ... 22.6 mA)
Wiring	2 conductor, twisted, shielded, 0.5 ... 0.75 mm² (22 ... 18 AWG)
Max. cable length	500 m (1 640.42 ft)
Sensor input communication	• 4 ... 20 mA • HART protocol, for supported sensors: SITRANS LR110, LR120, SITRANS Probe LU240
4 ... 20 mA sensor input	
• Resolution	0.025 % of full scale
• Accuracy	0.1 % of full scale
HART sensor input	Resolution and accuracy are dependent on connected sensor
Discrete input	
Quantity	2 (1 additional available on optional HART communication card)
Switching threshold, low	0 ... 0.5 V DC
Switching threshold, high	10 ... 50 V DC
Input current	Max. 3 mA
Bias voltage	24 V
Analog output	
Quantity	2
Range	0 ... 20 mA or 4 ... 20 mA
• Max. load	750 Ω
• Resolution	0.1 % of range
Accuracy	±20 µA
Wiring	2 conductor, twisted, shielded, 0.5 ... 0.75 mm² (22 ... 18 AWG)
Relay output	
Quantity	Up to 6, 4 form A and 2 form C
Rating	5 A at 250 V AC, non-inductive

Rated operating conditions	
Installation conditions	
• Location	Indoor/outdoor
• Installation category	II
• Pollution degree	4
Ambient conditions	
• Ambient temperature	-20 ... +50 °C (-4 ... +122 °F)
• Storage temperature	-20 ... +50 °C (-4 ... +122 °F)
Design	
Weight	
• Wall mount	1.22 kg (2.68 lb)
• Panel mount	1.35 kg (2.97 lb)
Enclosure	
• Material	Polycarbonate
• Degree of protection	
- Wall mount	IP65/Type 4X/NEMA 4X
- Wall mount	IP54/Type 3/NEMA 3
Display and control	
LCD display	60 x 40 mm (2.36 x 1.57 inch) LCD, 240 x 160 pixels resolution
Menu navigation	4 push button keys
Memory card	8 GB Industrial micro SD
Power supply	
AC version	100 ... 230 V AC, ±15 %, 50/60 Hz, 36 VA (17 W)
DC version	12 ... 30 V DC (20 W)
Certificates and approvals	• CE, RCM • FM, $_{C}$CSA$_{US}$, $_{C}$UL$_{US}$
Communication	
Service interface	USB 2.0 mini A cable
Optional Fieldbus	• HART, with Active/Passive 4 ... 20 mA • Modbus RTU • PROFIBUS PA • PROFIBUS DP • ProfiNet

© Siemens 2020

Selection and ordering data

	Article No.
SITRANS LT500 ↗	**7ML60-**
Continuous, non-contact, for liquids, slurries, and solids. Monitors level, volume, and volume flow, for virtually any application in a wide range of process industries.	■■-■■■■-■A A■
↗ Click on the Article No. for the online configuration in the PIA Life Cycle Portal.	
Product type	
HydroRanger	0
MultiRanger	1
Feature set	
Level, volume, and flow	3
Sensor input type	
4 ... 20 mA input(s)	0
Number of measurement points	
Single point version	A
Dual point version	B
Relay output	
1 relay (1 Form A), 250 V AC	A
3 relays (2 Form A, 1 Form C), 250 V AC	B
6 relays (4 Form A, 2 Form C), 250 V AC	C
Mounting, enclosure design	
Wall mount, standard enclosure	0
Wall mount, 4 entries, M20 cable glands included	1
Panel mount	2
Type of protection	
Non Ex (general purpose) $_{C}CSA_{US}$, FM, CE, RCM	0
Removable data storage	
Included, (8 GB micro SD)	1
Input voltage	
10 ... 30 V DC	2
100 ... 230 V AC	3

	Order code
Further designs	
Please add "**-Z**" to Article No. and specify Order code(s).	
Stainless steel tag [13 x 45 mm (0.5 x 1.75 inch)]: Tag (device parameter, max. 32 characters) plate stainless steel 304/1.4301	**Y15**
Mass storage	
Enable mass storage function with SD card (Not available for USA)	**Y80**
Certificates	
Factory test certificate - M to DIN 55350, Part 18	**C19**
Factory certificate 2.2 (EN 10204) - wetted parts	**C14**
Communication	
4 ... 20 mA, active output, with HART	**F01**
Modbus RTU	**F04**
PROFIBUS PA	**F05**
PROFIBUS DP	**F06**
ProfiNet	**F07**
Specials	
Special design	**Y99**
For customs, contact a local sales person. For more information please visit http://www.automation.siemens.com/aspa_app	
Operating Instructions	
All literature is available to download for free, in a range of languages, at http://www.siemens.com/processinstrumentation/documentation	
Optional equipment	Article No.
Tag, stainless steel, 12 x 45 mm, one text line, (max. 16 characters)	**7ML1930-1AC**
Barriers in a NEMA 4X/IP65 enclosure	**A5E50255823**
Barrier suitable for LR1xx & LU240 (STAHL: 9001/01-280-110-101)	**A5E50113513**
Sunshield, 304 Stainless steel	**7ML1930-1GA**
SITRANS RD100, loop powered display - see Chapter 7	**7ML5741-.....-.**
SITRANS RD150, remote digital display for 4 ... 20 mA and HART devices - see Chapter 7	**7ML5742-.....-....**
SITRANS RD200, universal input display with Modbus conversion - see Chapter 7	**7ML5740-.....-..**
SITRANS RD300, dual line display with totalizer and linearization curve and Modbus conversion - see Chapter 7	**7ML5744-.....-..**
Spare parts	
Replacement motherboard, single point, includes DC power module	**A5E50113558**
Replacement motherboard, dual point, includes DC power module	**A5E50113557**
Replacement motherboard, single point, includes AC power module	**A5E50113542**
Replacement motherboard, dual point, includes AC power module	**A5E50113543**
Replacement lid with 4 button HMI	**A5E50113559**
Replacement lid with 4 button HMI panel mount version	**A5E50113560**
Retrofit kit for wall mount to panel mount version	**A5E50114010**
Replacement SD card	**A5E50113554**
HART communications module	**A5E50113564**
PROFIBUS PA communications module	**A5E50113568**
Modbus RTU communications module	**A5E50113565**
PROFIBUS DP communications module	**A5E50113567**
ProfiNet communications module	**A5E50113569**

© Siemens 2020

Dimensional drawings

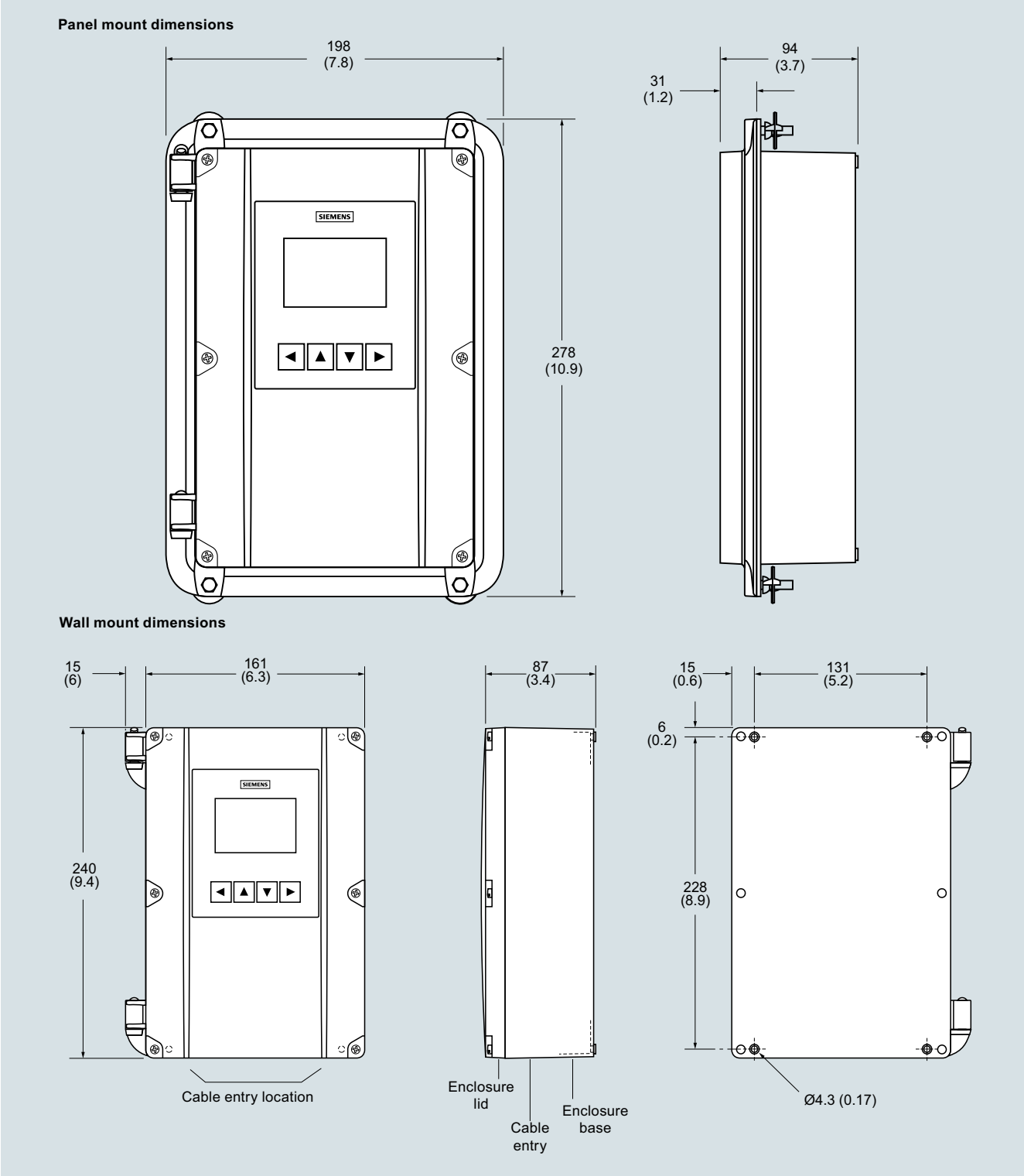

SITRANS LT500, dimensions in mm (inch)

© Siemens 2020

Circuit diagrams

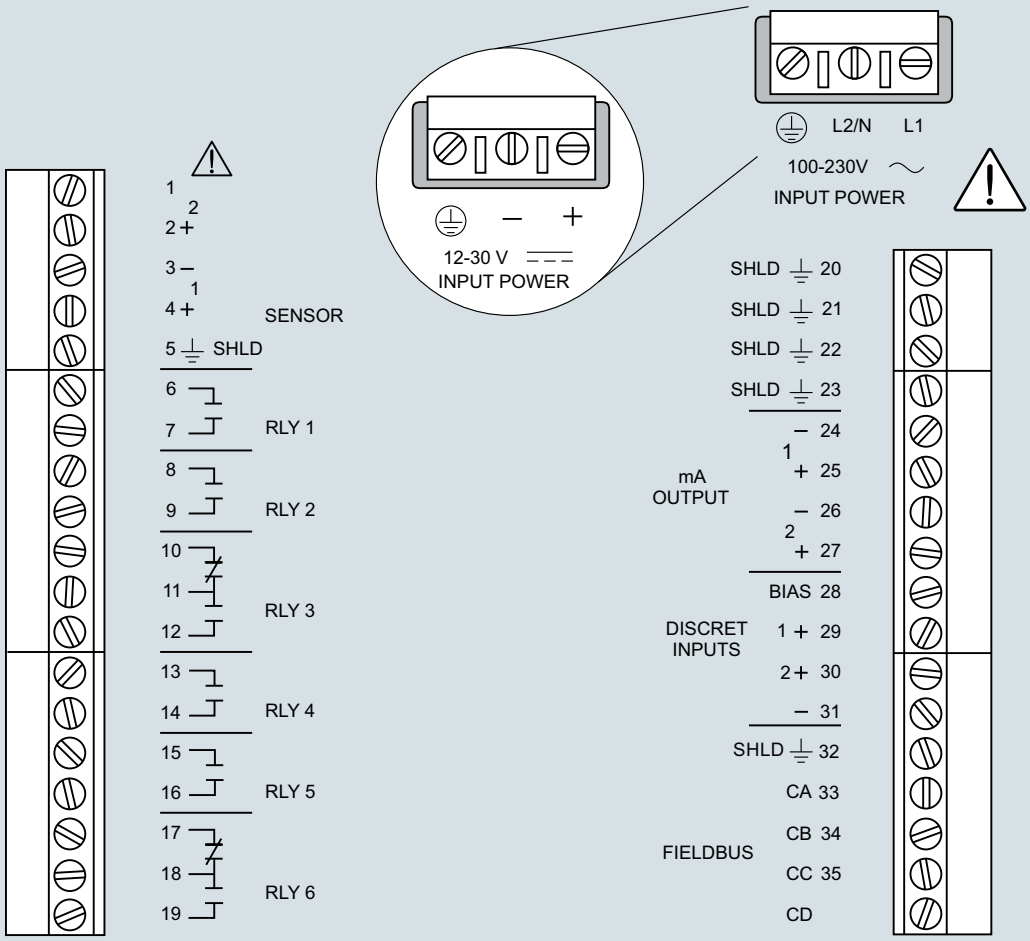

Relays shown in released state

Note:

1. Use 2-core copper wire, twisted, with shield, for expansion up to 365 m (1 200 ft). Route cable in grounded metal conduit, separate from other cables.
2. Verify that all system components are installed in accordance with instructions.
3. Connect all cable shields to the SITRANS LT500 shield connections. Avoid differential ground potentials by not connecting cable shields to ground (earth) anywhere else.
4. Keep exposed conductors on shielded cables as short as possible to reduce noise on the line caused by stray transmissions and noise pickup.

SITRANS LT500 connections

© Siemens 2020

Overview

The SITRANS LUT400 series controllers are compact, single point, long-range ultrasonic controllers for continuous level or volume measurement of liquids, slurries, solids, and high accuracy monitoring of open channel flow.

Benefits

- Small 1/2 DIN enclosure [144 h x 144 d x 146 w mm (5.7 x 5.7 x 5.75 inch)] with standard universal mounting bracket for wall, pipe, and DIN rail, plus an optional panel mount
- Easy to use HMI display with local four-button programming, menu-driven parameters, and Wizard support for key applications
- English, German, French, Spanish, Chinese, Italian, Portuguese, and Russian texts on the HMI.
- Level, Volume, OCM Flow monitoring
- Three relays combined with a suite of pump, alarm, and relay control features
- HART Communications
- EDDs for SIMATIC PDM, AMS Device Manager, and Field Communicator 375/475, plus DTMs for FDTs (Field Device Tools)
- Web browser for local programming from an intuitive web-based interface
- Two discrete inputs for backup level override and pump interlock functions
- Echo profile and trend views from the local display
- Patented digital receiver for improved performance in electrically noisy applications (close proximity to VSDs)
- Real time clock with daylight savings time, supporting an integrated datalogger and energy saving algorithms for minimizing pump operation during high cost energy periods
- Removable terminal blocks for ease of wiring
- MCERTS Certified for Open Channel Flow

Application

The SITRANS LUT400 comes in three different models, depending on the application, level of performance and functionality required:

- SITRANS LUT420 Level Controller: Level or volume measurement of liquids, slurries, and solids, as well as basic pump control functions, and basic data logging capability
- SITRANS LUT430 Level, Pump and Flow Controller: Includes all features of the LUT420 plus a full suite of advanced pump control and alarm functionality, open channel flow monitoring, and basic flow data logging capability
- SITRANS LUT440 High Accuracy OCM: Our most featured, highest accuracy model. Includes all features of the LUT430, plus the industry's best accuracy (± 1 mm within 3 m), full suite of advanced control functionality, and enhanced flow logging capability
- Key Applications: wet wells, reservoirs, flumes/weirs, chemical storage, liquid storage, hoppers, crusher bins, dry solids storage

© Siemens 2020

Technical specifications

Mode of Operation	Ultrasonic level, volume, pump, and open channel flow
Measuring range	0.3 … 60 m (1 … 196 ft), transducer dependent
Input	
Discrete	0 ... 50 V DC switching level Logical 0 ≤ 10 V DC Logical 1 = 10 ... 50 V DC Max. 3 mA
Output	
Transducer frequency	10 ... 52 kHz
Ultrasonic transducer	Compatible transducers: All Echo-Max and ST-H series transducers
Relays	• 1 SPDT Form C, NO or NC relay, rated 1A at 250 V AC, non-inductive and 3A at 30 V DC • 2 SPST Form A, NO relays, rated 5A at 250 V AC, non-inductive and 3 A at 30 V DC
mA output	4 … 20 mA, isolated
Max. load	600 Ω max. in ACTIVE mode, 750 Ω max. in PASSIVE mode
Resolution	0.1 % of range
Accuracy	
Error in measurement	• Standard operation: ± 1 mm (0.04 inch) plus 0.17 % of measured distance • High accuracy OCM: ± 1 mm (0.04 inch), within 3 m (9.84 ft) range
Resolution	• Standard operation: 0.1 % of range or 2 mm (0.08 inch), whichever is greater • High accuracy OCM: 0.6 mm (0.02 inch), within 3 m (9.84 ft) range
Temperature compensation	• -40 ... +150 °C (-40 ... +300 °F) • Integral temperature sensor in transducer • External TS-3 temperature sensor (optional) • Programmable fixed temperature values
Rated operating conditions	
Installation conditions	
• Location	Indoor/outdoor
• Installation category	II
• Pollution degree	4
Ambient conditions	
• Ambient temperature (enclosure)	-20 … +50 °C (-4 … +122 °F)
• Storage temperature	-20 … +50 °C (-4 … +122 °F)

Design	
Weight	
• Enclosure with display lid	1.3 kg (2.87 lb)
• Enclosure with blank lid	1.2 kg (2.65 lb)
Material (enclosure)	Polycarbonate
Degree of protection	
• Enclosure with display or blank lid	IP65/Type 4X/NEMA 4X
• Enclosure with blank lid and knock-out removed	IP20
Remote display lid	IP65/Type 3/NEMA 3
Cable	
Transducer and mA output signal	• Transducer, mA output: 2 copper conductors, twisted, with foil shield/drain wire, 300 V 0.5 … 0.75 mm² (22 … 18 AWG) • Relay/power to be copper conductors per local requirements to meet 250 V 5 A contact rating
Max. separation between transducer and transceiver	365 m (1 200 ft)
Displays and controls	60 x 40 mm (2.36 x 1.57 inch) removable LCD, 240 x 160 pixels resolution, operational up to 5 m from enclosure base
Programming	
• Primary	4 Local push buttons
• Secondary	• PC running SIMATIC PDM • PC running Emerson AMS Device Manager • PC running a web browser • PC running a Field Device Tool (FDT) • Field Communicator 375/475 (FC375/FC475)
Memory	• 512 kB flash EPROM • 1.5 MB flash for data logging
Power supply	
AC version	100 ... 230 V AC ± 15 %, 50/60 Hz, 36 VA Fuse: 5 x 20 mm, Slow Blow, 0.25 A, 250 V
DC version	10 … 32 V DC, 10 W Fuse: 5 x 20 mm, Slow Blow, 1.6 A, 125 V
Certificates and approvals	
General	$CSA_{US/C}$, CE, FM, UL listed, RCM, EAC, KCC, MCERTS certified for Open Channel Flow
Hazardous	
• Non-incendive (Canada)	CSA Class I, Div. 2, Groups A, B, C, D; Class II, Div. 2, Groups F, G; Class III
• Shipping	Lloyd's Register, ABS
Communication	HART 7.0, USB

© Siemens 2020

Technical specifications (continued)

		SITRANS LUT420	SITRANS LUT430	SITRANS LUT440
Category	**Feature**	**Level Controller**	**Level, pump and flow controller**	**High accuracy OCM controller**
Operations	Level, space, and distance measurement	✓	✓	✓
	Open channel flow measurement		✓	✓
	Volume conversion	✓	✓	✓
Specifications	Compatible with EchoMax and ST-H transducers	✓	✓	✓
	Standard accuracy: ± 1 mm + 0.17 % of measured distance	✓	✓	✓
	High accuracy: ± 1 mm within 3 meters			✓
	Mounting options: wall or panel, pipe, DIN-rail	✓	✓	✓
Data logging and communications	HART communications	✓	✓	✓
	4 ... 20 mA output (active and passive)	✓	✓	✓
	Integrated datalogger for measurement value and alarms	✓	✓	✓
	Integrated datalogger for fixed rate flow logging		✓	✓
	Integrated datalogger for variable rate flow logging triggered by changes in flow condition			✓
	Daily data logging for maximum, minimum and average flow, daily totalized volume, and minimum and maximum temperature		✓	✓
Flow monitoring	High accuracy open channel flow measurement			✓
	9 digit daily and running flow totalizers		✓	✓
	High and low flowrate alarms		✓	✓
	External totalizer and sampler control		✓	✓
	MCERTS Class 1 Certification			✓
	MCERTS Class 2 Certification		✓	
Pump control	Energy saving algorithms for pump control		✓	✓
	Wall cling reduction	✓	✓	✓
	Pump run-on functionality		✓	✓
	Pump start and power resumption delays		✓	✓
	Alternate duty pump routines	✓	✓	✓
	Fixed duty and service ratio pump routines		✓	✓
	Pumped volume totalizer		✓	✓
	Submergence detection	✓	✓	✓
	Discrete input pump interlocks		✓	✓
	Time to spill calculation		✓	✓

© Siemens 2020

Selection and ordering data

	Article No.
SITRANS LUT420 and LUT430 ↗	**7ML5050-**
Continuous, non-contact, 60 m (197 ft) range. Monitors level, volume, and volume flow in liquids, slurries, and solids. With high accuracy volume flow and built in data logging.	**0 ■ ■ ■ ■ - ■ ■ ■ 0**
↗ Click on the Article No. for the online configuration in the PIA Life Cycle Portal.	
Model	
SITRANS LUT420 - Level controller	**A**
SITRANS LUT430 - Level, Pump & Flow controller	**B**
Enclosure display options	
With display	**A**
With remote panel mount display [Includes panel mount cable extension, 2.5 m (8.2 ft)]	**B**
No display (blank lid provided)	**C**
Note: Enclosure includes back-plate for wall and pipe mounting, and an integrated clip for DIN-rail mounting. DIN-rail mounting for standard TS35 x 7.5 and TS35 x 15 mm DIN-rail to IEC 60715, EN 60715	
Input voltage	
100 ... 230 V AC ± 15 %	**1**
10 ... 32 V DC	**2**
Cable inlet	
3 cable inlets, cable glands not supplied	**1**
3 cable inlets, 3 M20 plastic cable glands supplied	**2**
Number of measurement points	
Single point system (includes one transducer input, one mA output, and one external temperature sensor input)	**1**
Communications and I/O	
HART, 2 discrete inputs, 3 relays	**D**
Approvals	
General purpose CE, FM, $CSA_{US/C}$, UL, RCM, EAC, KCC	**A**
Hazardous locations CSA Class I, II, III, Div. 2, Groups A, B, C, D, F, G	**C**
Further designs	Order code
Please add "**-Z**" to Article No. and specify Order code(s).	
Manufacturer's test certificate M to DIN 55350, Part 18 and to ISO 9000	**C11**
Stainless steel tag [69 x 50 mm (2.71 x 1.97 inch)]: Measuring-point number/identification (max. 27 characters) specify in plain text	**Y15**
Namur NE43 failsafe setting - device preset to failsafe < 3.6 mA	**N07**
Operating Instructions	
All literature is available to download for free, in a range of languages, at	

http://www.siemens.com/processinstrumentation/documentation

	Article No.
Accessories	
Tag, stainless steel, 12 x 45 mm (0.47 x 1.77 inch), one text line, suitable for enclosure	**7ML1930-1AC**
TS-3 Temperature Sensor - see TS-3 on page 4/226	**7ML1813-...**
Panel mount cable extension, 2.5 m (8.2 ft)	**7ML1930-1GF**
Qty 3 cable glands and retaining nuts	**7ML1930-1GB**
USB cable, 2 m (6.56 ft) - Standard USB-A to USB-mini B	**7ML1930-1GD**
Hart modem/USB (for use with a PC and SIMATIC PDM)	**7MF4997-1DB**
Sunshield, 304 stainless steel	**7ML1930-1GE**
SITRANS RD100, loop powered display - see Chapter 7	**7ML5741-...**
SITRANS RD150, remote digital display for 4 ... 20 mA and HART devices - see Chapter 7	**7ML5742-.....-....**
SITRANS RD200, universal input display with Modbus conversion - see Chapter 7	**7ML5740-...**
SITRANS RD300, dual line display with totalizer and linearization curve and Modbus conversion - see Chapter 7	**7ML5744-...**
SITRANS RD500 web, universal remote monitoring solution for instrumentation - see Chapter 7	**7ML5750-...**
Spare parts	
Panel mount retrofit kit (convert standard unit with display to panel mount version)	**7ML1830-1PA**
Terminal block replacement kit (5 piece kit with one of each removable terminal)	**7ML1830-1PB**
Wall/Pipe mount plate	**7ML1830-1PC**
Enclosure (include blank label)	**7ML1830-1PD**
SITRANS LUT400 Lid (with Display)	**7ML1830-1PE**
SITRANS LUT400 Lid (blank)	**7ML1830-1PF**
Fuse - AC (0.25 A, 250 V, Slow Blow)	**7ML1830-1PG**
Fuse - DC (1.6 A, 125 V, Slow Blow)	**7ML1830-1PH**
Panel mount gasket and fastener kit	**7ML1830-1PK**
DIN-rail clip	**7ML1830-1PL**
LUT420, assembly, DC, board stack with cradle, general purpose	**A5E42824483**
LUT420, assembly, AC, board stack with cradle, general purpose	**A5E42824562**
LUT430, assembly, DC, board stack with cradle, general purpose	**A5E42824564**
LUT430, assembly, AC, board stack with cradle, general purpose	**A5E42824568**
LUT420, assembly, DC, board stack with cradle, hazardous	**A5E42824561**
LUT420, assembly, AC, board stack with cradle, hazardous	**A5E42824563**
LUT430, assembly, DC, board stack with cradle, hazardous	**A5E42824565**
LUT430, assembly, AC, board stack with cradle, hazardous	**A5E42824570**

© Siemens 2020

Selection and ordering data

	Article No.
SITRANS LUT440 ↗	**7ML5050-**
Continuous, non-contact, 60 m (197 ft) range. Monitors level, volume, and volume flow in liquids, slurries, and solids. With high accuracy volume flow and built in data logging.	**0 ■ ■ ■ ■ - ■ ■ ■ 0**
↗ Click on the Article No. for the online configuration in the PIA Life Cycle Portal.	
Model	
SITRANS LUT440 - High accuracy Open Channel Monitor[1]	**C**
Enclosure display options	
With display	**A**
With remote panel mount display [includes panel mount cable extension, 2.5 m (8.2 ft)]	**B**
No display (blank lid provided)	**C**
Note: Enclosure includes back-plate for wall and pipe mounting, and an integrated clip for DIN-rail mounting. DIN-rail mounting for standard TS35 x 7.5 and TS35 x 15 mm DIN-rail to IEC 60715, EN 60715	
Input voltage	
100 ... 230 V AC ± 15 %	**1**
10 ... 32 V DC	**2**
Cable inlet	
3 cable inlets, cable glands not supplied	**1**
3 cable inlets, 3 M20 plastic cable glands supplied	**2**
Number of measurement points	
Single point system (includes one transducer input, one mA output, and one external temperature sensor input)	**1**
Communications and I/O	
HART, 2 discrete inputs, 3 relays	**D**
Approvals	
General purpose CE, FM, $CSA_{US/C}$, UL, RCM, EAC, KCC	**A**
Hazardous locations CSA Class I, II, III, Div. 2, Groups A, B, C, D, F, G	**C**

[1] Compatible with all EchoMax Transducers. High accuracy OCM performance with the use of an XRS-5 transducer and TS-3 temperature sensor (each sold separately).

Further designs	Order code
Please add "**-Z**" to Article No. and specify Order code(s).	
Manufacturer's test certificate M to DIN 55350, Part 18 and to ISO 9000	**C11**
Stainless steel tag [69 x 50 mm (2.71 x 1.97 inch)]: Measuring-point number/identification (max. 27 characters) specify in plain text	**Y15**
Namur NE43 failsafe setting - device preset to failsafe < 3.6 mA	**N07**
Operating Instructions	
All literature is available to download for free, in a range of languages, at	

http://www.siemens.com/processinstrumentation/documentation

	Article No.
Accessories	
Tag, stainless steel, 12 x 45 mm (0.47 x 1.77 inch), one text line, suitable for enclosure	**7ML1930-1AC**
TS-3 Temperature Sensor - see TS-3 on page 4/226	**7ML1813-...**
Panel mount cable extension 2.5 m (8.2 ft)	**7ML1930-1GF**
Qty 3 cable glands and retaining nuts	**7ML1930-1GB**
USB cable 2 m (6.56 ft) - Standard USB-A to USB-mini B	**7ML1930-1GD**
HART modem/USB (for use with PC and SIMATIC PDM)	**7MF4997-1DB**
Sunshield, 304 stainless steel	**7ML1930-1GE**
SITRANS RD100, loop powered display - see Chapter 7	**7ML5741-...**
SITRANS RD150, remote digital display for 4 ... 20 mA and HART devices - see Chapter 7	**7ML5742-.....-....**
SITRANS RD200, universal input display with Modbus conversion - see Chapter 7	**7ML5740-...**
SITRANS RD300, dual line display with totalizer and linearization curve and Modbus conversion - see Chapter 7	**7ML5744-...**
SITRANS RD500 web, universal remote monitoring solution for instrumentation - see Chapter 7	**7ML5750-...**
Spare parts	
Panel mount retrofit kit (convert standard unit with display to panel mount version)	**7ML1830-1PA**
Terminal block replacement kit (5 piece kit with one of each removable terminal)	**7ML1830-1PB**
Wall/Pipe mount plate	**7ML1830-1PC**
Enclosure (include blank label)	**7ML1830-1PD**
SITRANS LUT400 Lid (with Display)	**7ML1830-1PE**
SITRANS LUT400 Lid (blank)	**7ML1830-1PF**
Fuse - AC (0.25 A, 250 V, Slow Blow)	**7ML1830-1PG**
Fuse - DC (1.6 A, 125 V, Slow Blow)	**7ML1830-1PH**
Panel mount gasket and fastener kit	**7ML1830-1PK**
DIN-rail clip	**7ML1830-1PL**
LUT440, assembly, DC, board stack with cradle, general purpose	**A5E42847453**
LUT440, assembly, AC, board stack with cradle, general purpose	**A5E42847455**
LUT440, assembly, DC, board stack with cradle, hazardous	**A5E42847454**
LUT440, assembly, AC, board stack with cradle, hazardous	**A5E42847456**

© Siemens 2020

Dimensional drawings

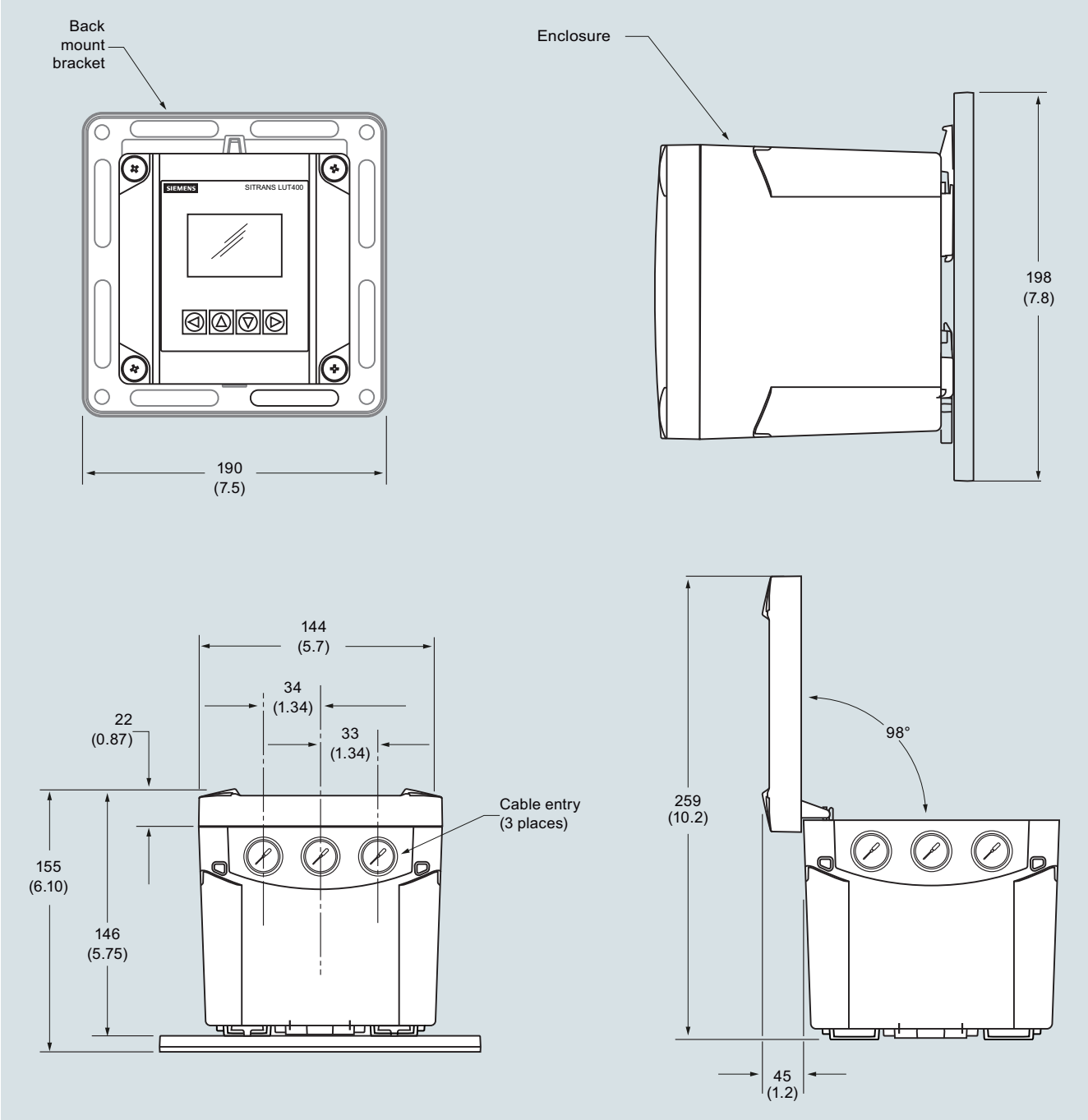

SITRANS LUT400, dimensions in mm (inch)

© Siemens 2020

Dimensional drawings (continued)

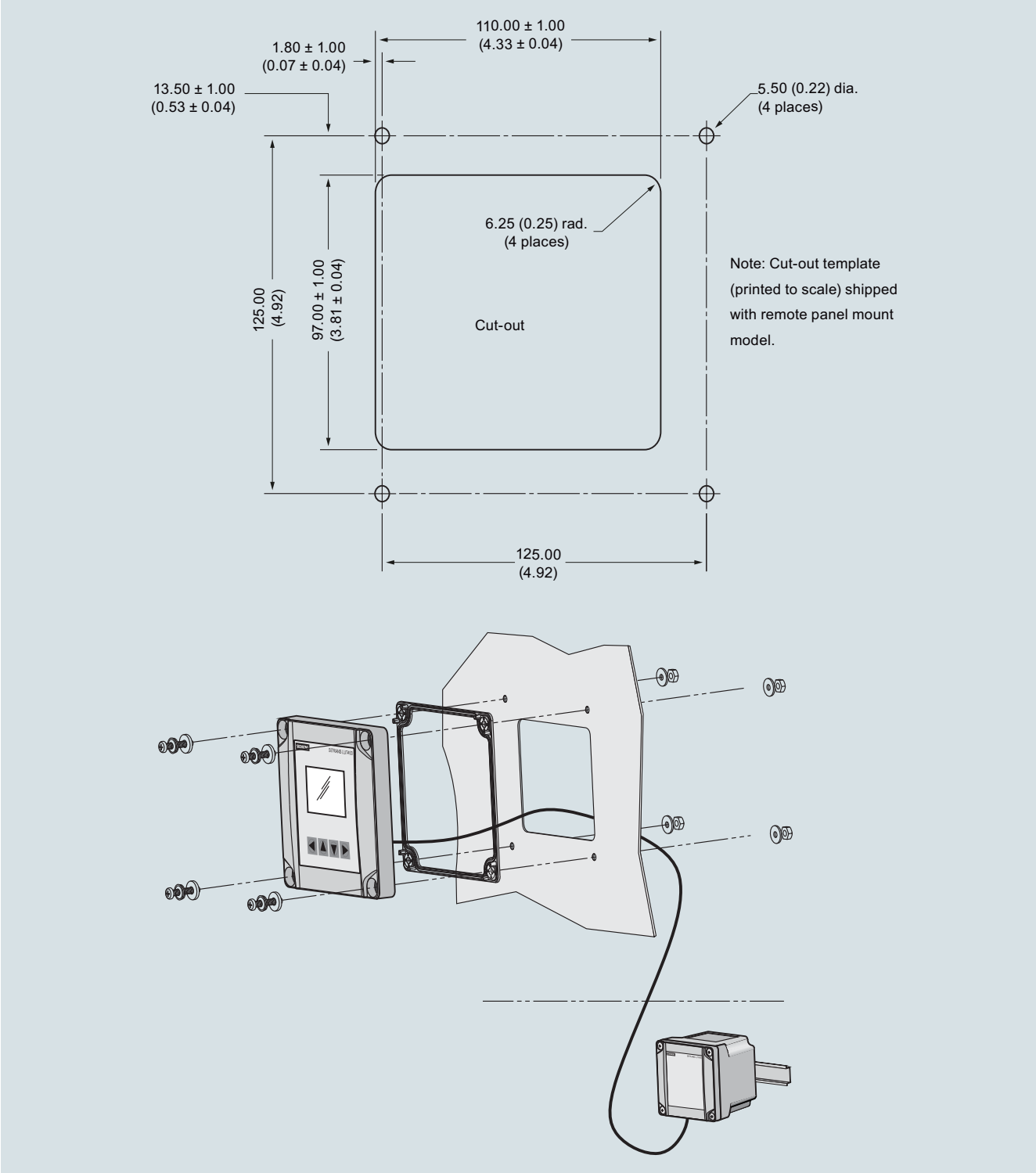

SITRANS LUT400, dimensions in mm (inch)

© Siemens 2020

Circuit diagrams

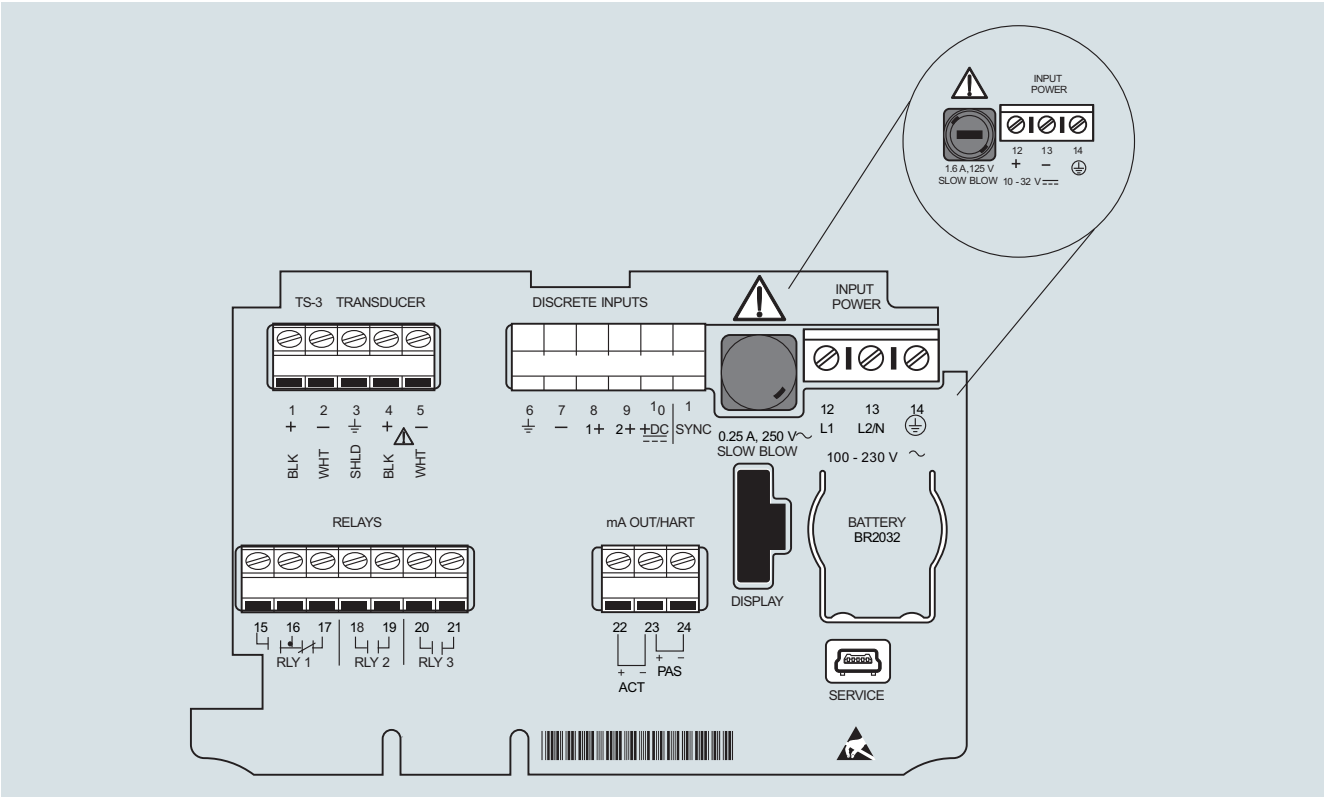

SITRANS LUT400 connections

© Siemens 2020

Overview

MultiRanger 200 HMI is a versatile short to medium-range ultrasonic single and multi-vessel level monitor/controller for virtually any application in a wide range of industries.

Benefits

- Easy to use HMI display with local four-button programming, menu-driven parameters, and Wizard support for key applications
- English, German, French, Spanish, Chinese, Italian, Portuguese, and Russian texts on the HMI
- Removable terminal blocks for ease of wiring
- Digital input for back-up level override from point level device
- Communication using built-in Modbus RTU via RS 485 and SIMATIC PDM configuration software
- Compatible with SmartLinx system: PROFIBUS DP, PROFINET (cyclic access of process values only), DeviceNet, Modbus TCP/IP, and EtherNet/IP
- Single or dual point level monitoring
- Auto False-Echo Suppression for fixed obstruction avoidance
- Differential amplifier transceiver for common mode noise reduction and improved signal-to-noise ratio
- Level, volume, and flow measurements in open channels, differential control, extended pump control, and alarm functions
- Wall and panel mounting options

Application

MultiRanger 200 HMI can be used with various materials, including, water, municipal waste, acids, woodchips, or on materials with high angles of repose. MultiRanger 200 HMI offers true dual point monitoring, digital communications with built-in Modbus RTU via RS 485, as well as compatibility with SIMATIC PDM, allowing PC configuration and set-up. MultiRanger 200 HMI features Sonic Intelligence advanced echo-processing software for increased reading reliability.

MultiRanger 200 HMI will monitor open channel flow and features more advanced relay alarming and pump control functions as well as volume conversion.

It is compatible with chemical-resistant EchoMax transducers that are approved for hostile environments.

- Key Applications: wet wells, flumes/weirs, bar screen control, hoppers, chemical storage, liquid storage, crusher bins, dry solids storage

Design

The MultiRanger 200 HMI is available in wall or panel mounting options.

© Siemens 2020

Technical specifications

Mode of Operation	
Measuring principle	Ultrasonic level measurement
Measuring range	0.3 ... 15 m (1 ... 50 ft)
Measuring points	1 or 2
Input	
Analog	0 ... 20 mA or 4 ... 20 mA, from alternate device, scalable
Discrete	10 ... 50 V DC switching level Logical 0 ≤ 0.5 V DC Logical 1 = 10 ... 50 V DC max. 3 mA
Output	
EchoMax transducer	44 kHz
Ultrasonic transducer	Compatible transducers: ST-H and EchoMax series XPS-10, XPS-15/15F, and XRS-5
Relays	Rating 5 A at 250 V AC, non-inductive
mA output	0 ... 20 mA or 4 ... 20 mA
• Max. load	750 Ω, isolated
• Resolution	0.1 % of range
Accuracy	
Error in measurement	0.25 % of range or 6 mm (0.24 inch), whichever is greater
Resolution	0.1 % of measuring range[1] or 2 mm (0.08 inch), whichever is greater
Temperature compensation	• -50 ... +150 °C (-58 ... +302 °F) • Integral temperature sensor • External TS-3 temperature sensor (optional) • Programmable fixed temperature values
Rated operating conditions	
Installation conditions	
• Location	Indoor/outdoor
• Installation category	II
• Pollution degree	4
Ambient conditions	
• Ambient temperature (housing)	-20 ... +50 °C (-4 ... +122 °F)
• Storage temperature	-20 ... +50 °C (-4 ... +122 °F)

Mode of Operation	
Design	
Weight	
• Wall mount	1.22 kg (2.68 lb)
• Panel mount	1.35 kg (2.97 lb)
Material (enclosure)	Polycarbonate
Degree of protection (enclosure)	
• Wall mount	IP65/Type 4X/NEMA 4X
• Panel mount	IP54/Type 3/NEMA 3
Electrical connection	
• Transducer and mA output signal	2-core copper conductor, twisted, shielded, 0.5 ... 0.75 mm² (22 ... 18 AWG), Belden 8760 or equivalent is acceptable
• Max. separation between transducer and transceiver	365 m (1 200 ft)
Displays and controls	60 x 40 mm (2.36 x 1.57 inch) LCD 240 x 160 pixels resolution
Power supply	
AC version	100 ... 230 V AC ± 15 %, 50/60 Hz, 36 VA (17 W)
DC version	12 ... 30 V DC (20 W)
Certificates and approvals	• CE, RCM, EAC, KCC[2] • FM, $CSA_{US/C}$, UL • CSA Class I, Div. 2, Groups A, B, C, and D, Class II, Div. 2, Groups F and G, Class III (wall mount only)
Communication	• RS 232 with Modbus RTU or ASCII via RJ-11 connector • RS 485 with Modbus RTU or ASCII via terminal strips • Optional: SmartLinx cards for - PROFIBUS DP-V1, PROFINET (cyclic access of process values only) - DeviceNet, Modbus TCP/IP, EtherNet/IP

[1] Program range is defined as the empty distance to the face of the transducer plus any range extension

[2] EMC performance available on request

© Siemens 2020

Selection and ordering data

	Article No.
MultiRanger 200 Ultrasonic level controller ↗	**7ML5033-**
Continuous, non-contact, 15 m (50 ft) range. Monitors level, volume, and open channel flow in liquids, slurries, and solids.	■ ■ ■ ■ ■ - ■ ■
↗ Click on the Article No. for the online configuration in the PIA Life Cycle Portal.	
Versions	
MultiRanger 200, level, volume, flow, and differential measurements	**2**
Mounting, enclosure design	
4 button HMI, Wall mount, standard enclosure	**D**
4 button HMI, Wall mount, 4 entries, 4 M20 cable glands included	**E**
4 button HMI, Panel Mount	**F**
Input voltage	
100 ... 230 V AC	**A**
12 ... 30 V DC	**B**
Number of measurement points	
Single point version	**0**
Dual point version	**1**
Data communications (SmartLinx)	
Without module	**0**
SmartLinx PROFIBUS DP V0 module	**2**
SmartLinx DeviceNet module	**3**
SmartLinx PROFIBUS DP V1 module	**4**
SmartLinx PROFINET module[2]	**5**
SmartLinx EtherNet/IP module	**6**
SmartLinx Modbus TCP/IP module See SmartLinx product page 4/348 for more information.	**7**
Output relays	
6 relays (4 Form A, 2 Form C), 250 V AC	**2**
Approvals	
General Purpose CE, FM, $CSA_{US/C}$, UL listed, RCM, EAC, KCC	**A**
CSA Class I, Div. 2, Groups A, B, C, and D; Class II, Div. 2, Groups F and G; Class III[1]	**B**

[1] Available with Mounting/Enclosure design options D or E.

[2] SmartLinx PROFINET module is certified per standard V2.2.4.

	Order code
Further designs	
Please add "**-Z**" to Article No. and specify Order code(s).	
Stainless steel tag [69 x 50 mm (2.71 x 1.97 inch)]: Measuring-point number/identification (max. 27 characters) specify in plain text	**Y15**
Test Certificate: Manufacturer's test certificate M to DIN 55350, Part 18 and to ISO 9000	**C11**
Operating Instructions	
All literature is available to download for free, in a range of languages, at	
http://www.siemens.com/processinstrumentation/documentation	
Optional equipment	Article No.
Tag, stainless steel, 12 x 45 mm, one text line, suitable for enclosures	**7ML1930-1AC**
Sunshield, 304 Stainless steel	**7ML1930-1GA**
USB to RS 232 adapter	**7ML1930-6AK**
RS 232 to RJ11 COMMS adapter	**7ML1830-1MC**
SITRANS RD100, loop powered display - see Chapter 7	**7ML5741-...**
SITRANS RD150, remote digital display for 4 ... 20 mA and HART devices - see Chapter 7	**7ML5742-.....-....**
SITRANS RD200, universal input display with Modbus conversion - see Chapter 7	**7ML5740-...**
SITRANS RD300, dual line display with totalizer and linearization curve and Modbus conversion - see Chapter 7	**7ML5744-...**
SITRANS RD500 web, universal remote monitoring solution for instrumentation - see Chapter 7	**7ML5750-...**
Spare parts	
Power Supply Board (100 ... 230 V AC)	**7ML1830-1MD**
Power Supply Board (12 ... 30 V DC)	**7ML1830-1ME**
Removable terminal blocks	**A5E38824197**
Spare lid with HMI, MultiRanger 200 HMI/HydroRanger 200 HMI, wall	**A5E35778738**
Spare lid with HMI, MultiRanger 200 HMI/HydroRanger 200 HMI, panel	**A5E35778740**
SmartLinx DeviceNet module	**7ML1830-1HT**
SmartLinx PROFIBUS DP V1 module	**A5E35778741**
Smartlinx PROFINET IO module	**7ML1830-1PM**
SmartLinx Modbus TCP/IP, EtherNet/IP module	**7ML1830-1PN**

© Siemens 2020

Dimensional drawings

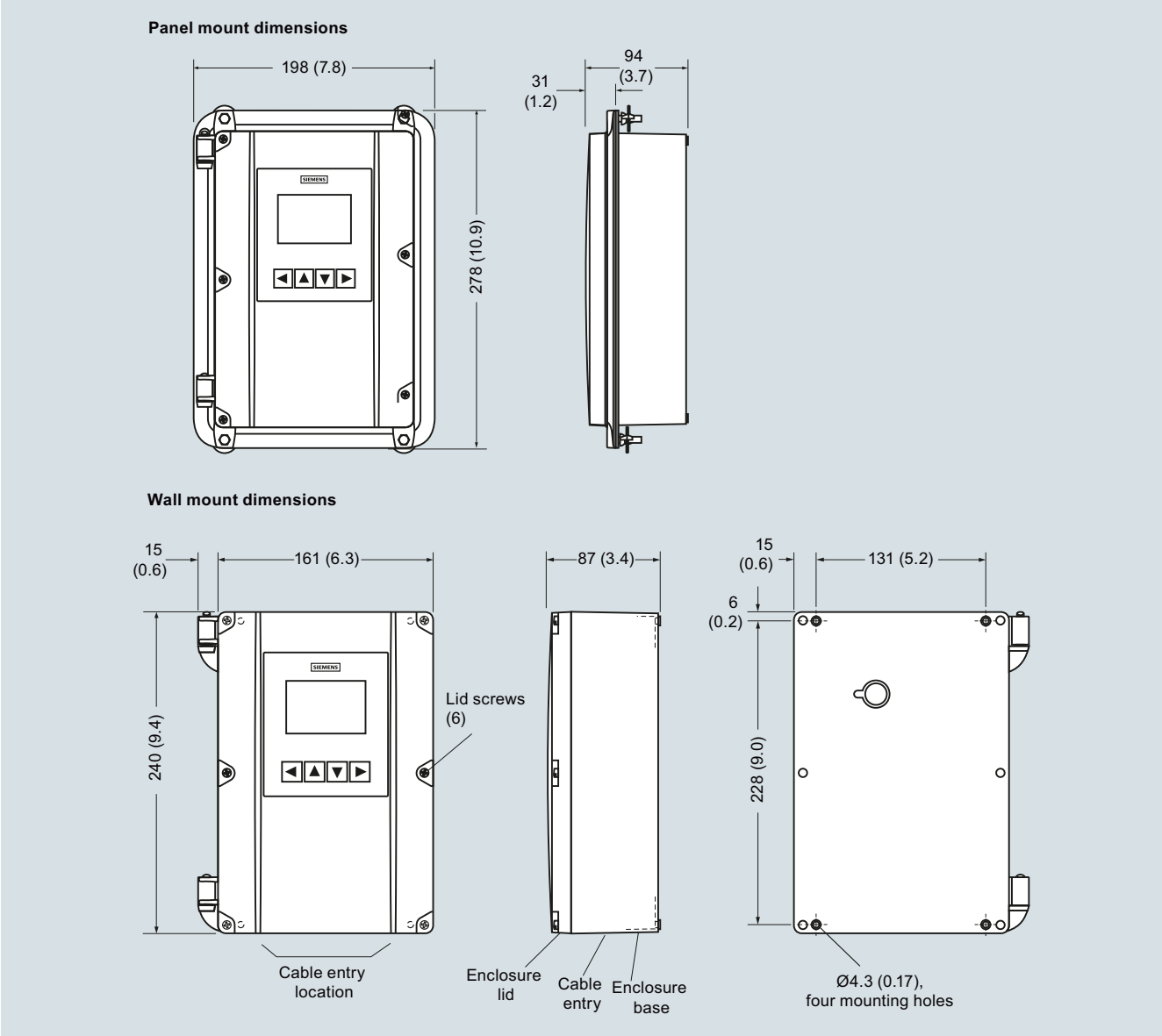

MultiRanger 200 HMI, dimensions in mm (inch)

© Siemens 2020

Circuit diagrams

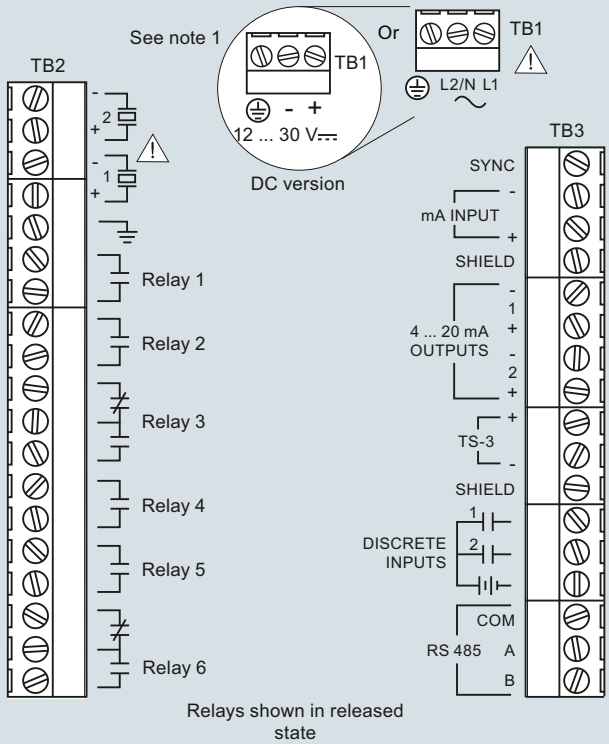

Note:

1. Use 2-core copper wire, twisted, with shield, for expansion up to 365 m (1 200 ft). Route cable in grounded metal conduit, separate from other cables.
2. Verify that all system components are installed in accordance with instructions.
3. Connect all cable shields to the MultiRanger shield connections. Avoid differential ground potentials by not connecting cable shields to ground (earth) anywhere else.
4. Keep exposed conductors on shielded cables as short as possible to reduce noise on the line caused by stray transmissions and noise pickup.

MultiRanger 200 HMI connections

© Siemens 2020

Overview

MultiRanger is a versatile short to medium-range ultrasonic single and multi-vessel level monitor/controller for virtually any application in a wide range of industries.

Benefits

- Digital input for back-up level override from point level device
- Communication using built-in Modbus RTU via RS 485
- Compatible with SmartLinx communication options or SIMATIC PDM via RS 485
- Single or dual point level monitoring
- Auto False-Echo Suppression for fixed obstruction avoidance
- Differential amplifier transceiver for common mode noise reduction and improved signal-to-noise ratio
- MultiRanger 100: level measurements, simple pump control, and level alarm functions
- MultiRanger 200: level, volume, and flow measurements in open channels, differential control, extended pump control, and alarm functions
- Wall and panel mounting options

Application

MultiRanger can be used on different materials, including fuel oil, municipal waste, acids, woodchips, or on materials with high angles of repose. MultiRanger offers true dual point monitoring, digital communications with built-in Modbus RTU via RS 485, as well as compatibility with SIMATIC PDM, allowing PC configuration and setup. MultiRanger features Sonic Intelligence advanced echo-processing software for increased reading reliability.

MultiRanger 100 offers cost-effective level alarming, as well as on/off and alternating pump control. MultiRanger 200 will monitor open channel flow and features more advanced relay alarming and pump control functions as well as volume conversion.

It is compatible with chemical-resistant EchoMax transducers that can be used in hostile environments at temperatures as high as 145 °C (293 °F).

- Key Applications: wet wells, flumes/weirs, bar screen control, hoppers, chemical storage, liquid storage, crusher bins, dry solids storage

Design

The MultiRanger is available in wall or panel mounting options.

© Siemens 2020

Technical specifications

Mode of Operation	
Measuring principle	Ultrasonic level measurement
Measuring range	0.3 ... 15 m (1 ... 50 ft)
Measuring points	1 or 2
Input	
Analog (MultiRanger 200 only)	0 ... 20 mA or 4 ... 20 mA, from alternate device, scalable
Discrete	10 ... 50 V DC switching level Logical 0 ≤ 0.5 V DC Logical 1 = 10 ... 50 V DC Max. 3 mA
Output	
EchoMax transducer	44 kHz
Ultrasonic transducer	Compatible transducers: ST-H and EchoMax series XPS-10, XPS 15/15F, and XRS-5
Relays	Rating 5 A at 250 V AC, non-inductive
• Version with 1 relay (MultiRanger 100 only)	1 SPST Form A
• Version with 3 relays	2 SPST Form A/1 SPDT Form C
• Version with 6 relays	4 SPST Form A/2 SPDT Form C
mA output	0 ... 20 mA or 4 ... 20 mA
• Max. load	750 Ω, isolated
• Resolution	0.1 % of range
Accuracy	
Error in measurement	0.25 % of range or 6 mm (0.24 inch), whichever is greater
Resolution	0.1 % of measuring range[1)] or 2 mm (0.08 inch), whichever is greater
Temperature compensation	• -50 ... +150 °C (-58 ... +302 °F) • Integral temperature sensor • External TS-3 temperature sensor (optional) • Programmable fixed temperature values
Rated operating conditions	
Installation conditions	
• Location	Indoor/outdoor
• Installation category	II
• Pollution degree	4
Ambient conditions	
• Ambient temperature (housing)	-20 ... +50 °C (-4 ... +122 °F)
• Storage temperature	-20 ... +50 °C (-4 ... +122 °F)

Design	
Weight	
• Wall mount	1.37 kg (3.02 lb)
• Panel mount	1.50 kg (3.31 lb)
Material (enclosure)	Polycarbonate
Degree of protection (enclosure)	
• Wall mount	IP65/Type 4X/NEMA 4X
• Panel mount	IP54/Type 3/NEMA 3
Electrical connection	
• Transducer and mA output signal	2-core copper conductor, twisted, shielded, 0.5 ... 0.75 mm² (22 ... 18 AWG), Belden 8760 or equivalent is acceptable
• Max. separation between transducer and transceiver	365 m (1 200 ft)
Displays and controls	100 x 40 mm (4 x 1.5 inch) multi-block LCD with backlighting
Programming	Programming using hand-held programmer, SIMATIC PDM or via PC with Dolphin Plus software
Power supply	
AC version	100 ... 230 V AC ± 15 %, 50/60 Hz, 36 VA (17 W)
DC version	12 ... 30 V DC (20 W)
Certificates and approvals	• CE, RCM, EAC, KCC[2)] • Lloyd's Register of Shipping • ABS Type Approval • FM, $CSA_{US/C}$, UL listed • CSA Class I, Div. 2, Groups A, B, C, and D, Class II, Div. 2, Groups F and G, Class III (wall mount only), ATEX II 3D, EAC Ex
Communication	• RS 232 with Modbus RTU or ASCII via RJ-11 connector • RS 485 with Modbus RTU or ASCII via terminal strips • Optional: SmartLinx cards for - PROFIBUS DP - DeviceNet

1) Program range is defined as the empty distance to the face of the transducer plus any range extension

2) EMC performance available on request

© Siemens 2020

Selection and ordering data

	Article No.
MultiRanger 200 Ultrasonic level controller ↗	**7ML5033-**
Continuous, non-contact, 15 m (50 ft) range. Monitors level, volume, and open channel flow in liquids, slurries, and solids.	■ ■ ■ ■ ■ - ■ ■
↗ Click on the Article No. for the online configuration in the PIA Life Cycle Portal.	
Versions	
MultiRanger 100, level measurement only	**1**
MultiRanger 200, level, volume, flow, and differential measurements	**2**
Mounting, enclosure design	
Wall mount, standard enclosure	**A**
Wall mount, 4 entries, 4 M20 cable glands included	**B**
Panel mount (CE, $CSA_{US/C}$, FM, UL)	**C**
Power supply	
100 ... 230 V AC	**A**
12 ... 30 V DC	**B**
Number of measurement points	
Single point version	**0**
Dual point version	**1**
Communication (SmartLinx)	
Without module	**0**
SmartLinx PROFIBUS DP module	**2**
SmartLinx DeviceNet module See SmartLinx product on page 4/348 for more information.	**3**
Output relays	
3 relays (2 Form A, 1 Form C), 250 V AC	**1**
6 relays (4 Form A, 2 Form C), 250 V AC	**2**
1 relay (1 Form A), 250 V AC (available on MultiRanger 100 model only)	**3**
Approvals	
General Purpose CE, FM, $CSA_{US/C}$, UL listed, RCM, EAC, KCC	**A**
CSA Class I, Div. 2, Groups A, B, C, and D; Class II, Div. 2, Groups F and G; Class III[1]	**B**
ATEX II 3D, EAC Ex[2]	**C**

[1] For wall mount applications only.

[2] For standard enclosure wall mount, option A only.

	Order code
Further designs	
Please add "**-Z**" to Article No. and specify Order code(s).	
Stainless steel tag [69 x 50 mm (2.71 x 1.97 inch)]: Measuring-point number/identification (max. 27 characters) specify in plain text	**Y15**
Operating Instructions	
All literature is available to download for free, in a range of languages, at	
http://www.siemens.com/processinstrumentation/documentation	
Accessories	Article No.
Handheld programmer	**A5E36563512**
Tag, stainless steel, 12 x 45 mm (0.47 x 1.77 inch), one text line, suitable for enclosure	**7ML1930-1AC**
M20 cable gland kit (4 M20 cable glands, 4 M20 nuts, 4 washers)	**7ML1930-1FV**
Sunshield kit, 304 stainless steel	**7ML1930-1GA**
USB to RS 232 adapter	**7ML1930-6AK**
SITRANS RD100, loop powered display - see Chapter 7	**7ML5741-...**
SITRANS RD150, remote digital display for 4 ... 20 mA and HART devices - see Chapter 7	**7ML5742-.....-....**
SITRANS RD200, universal input display with Modbus conversion - see Chapter 7	**7ML5740-...**
SITRANS RD300, dual line display with totalizer and linearization curve and Modbus conversion - see Chapter 7	**7ML5744-...**
SITRANS RD500 web, universal remote monitoring solution for instrumentation - see Chapter 7	**7ML5750-...**
Spare parts	
Power Supply Board (100 ... 230 V AC)	**7ML1830-1MD**
Power Supply Board (12 ... 30 V DC)	**7ML1830-1ME**
MultiRanger 100/200/ HydroRanger 200 display, non-HMI	**7ML1830-1MF**
Removable terminal blocks	**A5E38824197**

© Siemens 2020

Dimensional drawings

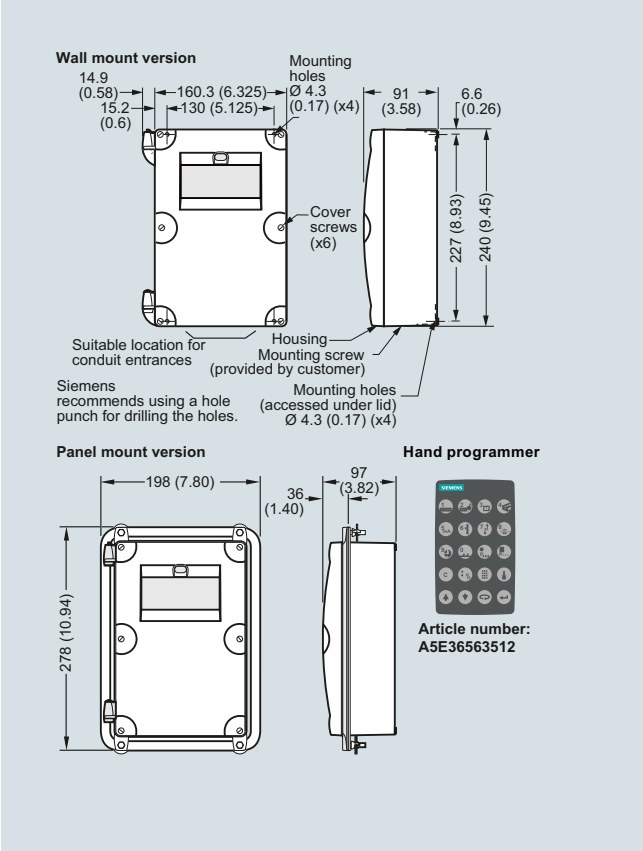

MultiRanger 100/200, dimensions in mm (inch)

Circuit diagrams

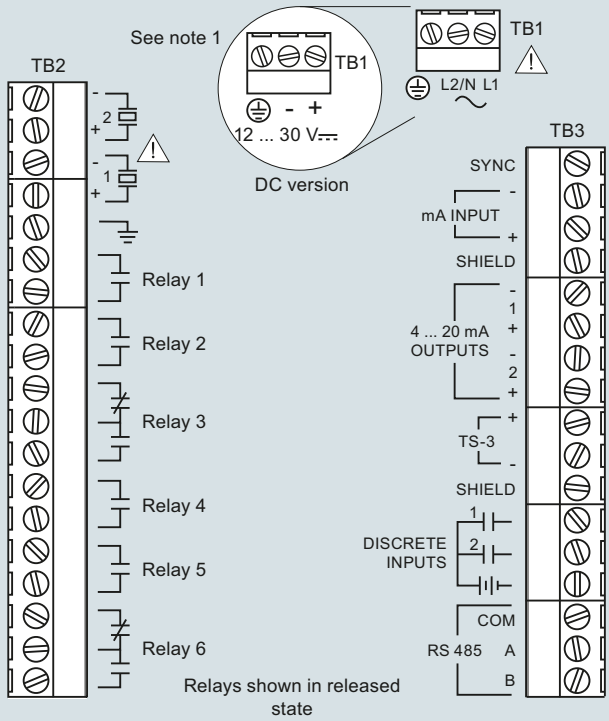

Note:

1. Use 2-core copper wire, twisted, with shield, for expansion up to 365 m (1 200 ft). Route cable in grounded metal conduit, separate from other cables.
2. Verify that all system components are installed in accordance with instructions.
3. Connect all cable shields to the MultiRanger shield connections. Avoid differential ground potentials by not connecting cable shields to ground (earth) anywhere else.
4. Keep exposed conductors on shielded cables as short as possible to reduce noise on the line caused by stray transmissions and noise pickup.

MultiRanger 100/200 connections

© Siemens 2020

Overview

HydroRanger 200 HMI is an ultrasonic level controller for up to six pumps and provides control, differential control, and open channel flow monitoring.

Benefits

- Easy to use HMI display with local four-button programming, menu-driven parameters, and Wizard support for key applications
- English, German, French, Spanish, Chinese, Italian, Portuguese, and Russian texts on the HMI
- Removable terminal blocks for ease of wiring
- Monitors wet wells, weirs, and flumes
- Communication using built-in Modbus RTU via RS 485 and SIMATIC PDM configuration software
- Compatible with SmartLinx system: PROFIBUS DP, PROFINET (cyclic access of process values only), DeviceNet, Modbus TCP/IP, and EtherNet/IP
- Single or dual point level monitoring
- 6 relays
- Auto False-Echo Suppression for fixed obstruction avoidance
- Anti-grease ring/tide mark buildup
- Differential amplifier transceiver for common mode noise rejection and improved signal-to-noise ratio
- Wall and panel mounting options

Application

For water authorities, municipal water, and wastewater plants, HydroRanger 200 HMI is an economical, low-maintenance solution delivering control efficiency and productivity needed to meet today's exacting standards. It offers single point monitoring with all models, and optional dual-point monitoring with 6 relay model. As well, it has digital communications with built-in Modbus RTU via RS 485.

The standard 6 relay HydroRanger 200 HMI will monitor open channel flow and features advanced relay alarming and pump control functions as well as volume conversion. It is compatible with SIMATIC PDM, allowing for PC configuration and set-up. Sonic Intelligence advanced echo-processing software provides increased reading reliability.

HydroRanger 200 HMI uses proven continuous ultrasonic echo ranging technology to monitor water and wastewater of any consistency up to 15 m (50 ft) in depth. Achievable resolution is 0.1 % with accuracy to 0.25 % of range. Unlike contacting devices, HydroRanger 200 HMI is immune to problems caused by suspended solids, harsh corrosives, grease or silt in the effluent, reducing downtime.

- Key Applications: wet wells, flumes/weirs, bar screen control

Technical specifications

Mode of Operation	
Measuring principle	Ultrasonic level measurement
Measuring range	0.3 ... 15 m (1 ... 50 ft), transducer dependent
Measuring points	1 or 2
Input	
Analog	0 ... 20 mA or 4 ... 20 mA, from alternate device, scalable (6 relay model)
Discrete	10 ... 50 V DC switching level Logical 0 ≤ 0.5 V DC Logical 1 = 10 ... 50 V DC max. 3 mA
Output	
EchoMax transducer	44 kHz
Ultrasonic transducer	Compatible transducers: ST-H and EchoMax series XPS-10, XPS-15/15F, and XRS-5
Relays[1)]	Rating 5 A at 250 V AC, non-inductive
• Model with 6 relays	4 SPST Form A/2 SPDT Form
mA output	0 ... 20 mA or 4 ... 20 mA
• Max. load	750 Ω, isolated
• Resolution	0.1 % of range
Accuracy	
Error in measurement	0.25 % of range or 6 mm (0.24 inch), whichever is greater
Resolution	0.1 % of measuring range or 2 mm (0.08 inch), whichever is greater[2)]
Temperature compensation	• -50 ... +150 °C (-58 ... +302 °F) • Integral temperature sensor in transducer • External TS-3 temperature sensor (optional) • Programmable fixed temperature values
Rated operating conditions	
Installation conditions	
• Location	Indoor / outdoor
• Installation category	II
• Pollution degree	4
Ambient conditions	
• Ambient temperature (enclosure)	-20 ... +50 °C (-4 ... +122 °F)
• Storage temperature	-20 ... +50 °C (-4 ... +122 °F)
Design	
Weight	
• Wall mount	1.22 kg (2.68 lb)
• Panel mount	1.35 kg (2.97 lb)
Material (enclosure)	Polycarbonate
Degree of protection (enclosure)	
• Wall mount	IP65/Type 4X/NEMA 4X
• Panel mount	IP54/Type 3/NEMA 3
Cable	
• Transducer and mA output signal	2-core copper conductor, twisted, shielded, 300 Vrms, 0.82 mm² (18 AWG), Belden 8 760 or equivalent is acceptable
• Max. separation between transducer and transceiver	365 m (1 200 ft)
Displays and controls	60 x 40 mm (2.36 x 1.57 inch) LCD 240 x 160 pixels resolution
Power supply[3)]	
AC version	100 ... 230 V AC ± 15 %, 50/60 Hz, 36 VA (17 W)
DC version	12 ... 30 V DC (20 W)

© Siemens 2020

Technical specifications (continued)

Certificates and approvals	• CE, RCM, EAC, KCC[4)] • FM, $CSA_{US/C}$, UL listed • $CSA_{US/C}$ Class I, Div. 2, Groups A, B, C and D, Class II, Div. 2, Groups F and G, Class III (wall mount only) • MCERTS Class 2 approved for Open Channel Flow
Communication	• RS 232 with Modbus RTU or ASCII via RJ-11 connector • RS 485 with Modbus RTU or ASCII via terminal blocks • Optional: SmartLinx cards for - PROFIBUS DPV1, PROFINET (cyclic access of process values only) - DeviceNet, Modbus TCP/IP, EtherNet/IP

1) All relays certified for use with equipment that fails in a state at or under the rated maximums of the relays.

2) Program range is defined as the empty distance to the face of the transducer plus any range extension.

3) Maximum power consumption is listed

4) EMC performance available upon request

Selection and ordering data

	Article No.
HydroRanger 100/200 Ultrasonic level controller ↗	**7ML5034-**
Continuous, non-contact, 15 m (50 ft) range. Monitors level, volume, and open channel flow in liquids, slurries, and solids.	■ ■ ■ ■ ■
↗ Click on the Article No. for the online configuration in the PIA Life Cycle Portal.	
Mounting, enclosure design	
4 button HMI, Wall mount, standard enclosure	**4**
4 button HMI, Wall mount, 4 entries, 4 M20 cable glands included	**5**
4 button HMI, Panel Mount	**6**
Input voltage	
100 ... 230 V AC	**A**
12 ... 30 V DC	**B**
Number of measurement points	
Single point model, 6 relays	**A**
Dual point model, 6 relays	**B**
Communication (SmartLinx)	
Without module	**0**
SmartLinx PROFIBUS DP-V0 module	**2**
SmartLinx DeviceNet module	**3**
SmartLinx PROFIBUS DP-V1 module	**4**
SmartLinx PROFINET module[2)]	**5**
SmartLinx EtherNet/IP module	**6**
SmartLinx Modbus TCP/IP module See SmartLinx product page 4/348 for more information	**7**
Approvals	
General Purpose CE, FM, $CSA_{US/C}$, UL listed, RCM, EAC, KCC	**1**
CSA Class I, Div. 2, Groups A, B, C, and D; Class II, Div. 2, Groups F and G; Class III[1)]	**2**

1) Available with Mounting/Enclosure design options 4 or 5.

2) SmartLinx PROFINET module is certified per standard V2.2.4.

Selection and ordering data

	Order code
Further designs	
Please add "**-Z**" to Article No. and specify Order code(s).	
Stainless steel tag [69 x 50 mm (2.71 x 1.97 inch)]: Measuring-point number/identification (max. 27 characters), specify in plain text	**Y15**
Test Certificate: Manufacturer's test certificate M to DIN 55350, Part 18 and to ISO 9000	**C11**
Operating Instructions	
All literature is available to download for free, in a range of languages, at	

http://www.siemens.com/processinstrumentation/documentation.

Accessories	Article No.
Tag, stainless steel, 12 x 45 mm (0.47 x 1.77 inch), one text line, suitable for enclosure	**7ML1930-1AC**
Sunshield kit, 304 stainless steel	**7ML1930-1GA**
USB to RS 232 adapter	**7ML1930-6AK**
RS 232 to RJ11 COMMS adapter	**7ML1830-1MC**
SITRANS RD100, loop powered display - see Chapter 7	**7ML5741-...**
SITRANS RD150, remote digital display for 4 ... 20 mA and HART devices - see Chapter 7	**7ML5742-.....-....**
SITRANS RD200, universal input display with Modbus conversion - see Chapter 7	**7ML5740-...**
SITRANS RD300, dual line display with totalizer and linearization curve and Modbus conversion - see Chapter 7	**7ML5744-...**
SITRANS RD500 web, universal remote monitoring solution for instrumentation - see Chapter 7	**7ML5750-...**
Spare parts	
Power Supply Board (100 ... 230 V AC)	**7ML1830-1MD**
Power Supply Board (12 ... 30 V DC)	**7ML1830-1ME**
Removable terminal blocks	**A5E38824197**
Spare lid with HMI, MultiRanger 200 HMI/HydroRanger 200 HMI, wall	**A5E35778738**
Spare lid with HMI, MultiRanger 200 HMI/HydroRanger 200 HMI, panel	**A5E35778740**
SmartLinx DeviceNet module	**7ML1830-1HT**
SmartLinx PROFIBUS DP-V1 module	**A5E35778741**
Smartlinx PROFINET IO module	**7ML1830-1PM**
SmartLinx Modbus TCP/IP, EtherNet/IP module	**7ML1830-1PN**

© Siemens 2020

Dimensional drawings

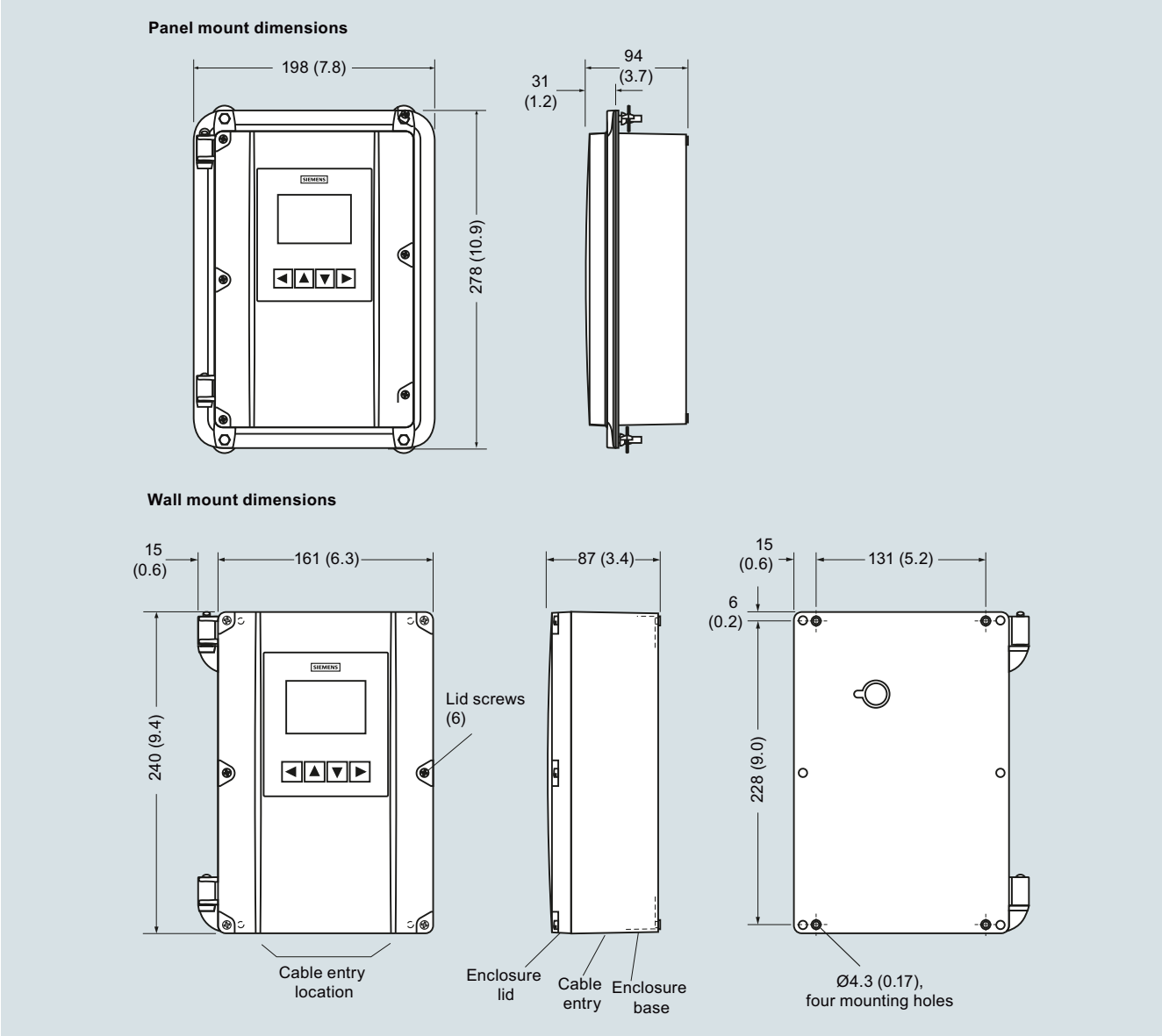

HydroRanger 200 HMI, dimensions in mm (inch)

© Siemens 2020

Circuit diagrams

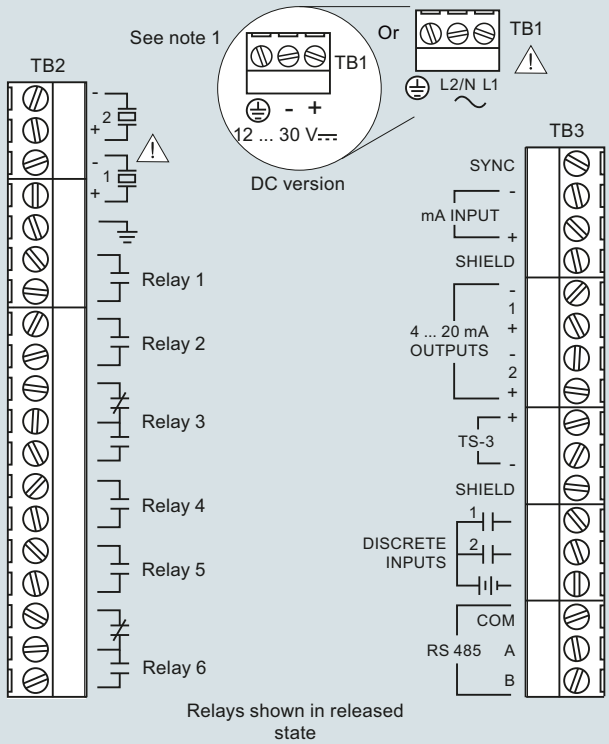

Note:

1. Use 2-core copper wire, twisted, with shield, for expansion up to 365 m (1 200 ft). Route cable in grounded metal conduit, separate from other cables.
2. Verify that all system components are installed in accordance with instructions.
3. Connect all cable shields to the HydroRanger shield connections. Avoid differential ground potentials by not connecting cable shields to ground (earth) anywhere else.
4. Keep exposed conductors on shielded cables as short as possible to reduce noise on the line caused by stray transmissions and noise pickup.

HydroRanger 200 HMI connections

© Siemens 2020

HydroRanger 200

Overview

HydroRanger 200 is an ultrasonic level controller for up to six pumps and provides control, differential control, and open channel flow monitoring.

Benefits

- Monitors wet wells, weirs and flumes
- Digital communications with built-in Modbus RTU via RS 485
- Compatible with SmartLinx communication options or SIMATIC PDM via RS 485
- Single or dual point level monitoring
- 6 relay (standard), 1 or 3 relay (optional)
- Auto False-Echo Suppression for fixed obstruction avoidance
- Anti-grease ring/tide mark buildup
- Differential amplifier transceiver for common mode noise rejection and improved signal-to-noise ratio
- Wall and panel mounting options

Application

For water authorities, municipal water, and wastewater plants, HydroRanger 200 is an economical, low-maintenance solution delivering control efficiency and productivity needed to meet today's exacting standards. It offers single point monitoring with all models, and optional dual-point monitoring with 6 relay model. As well, it has digital communications with built-in Modbus RTU via RS 485.

The standard 6 relay HydroRanger 200 will monitor open channel flow and features more advanced relay alarming and pump control functions as well as volume conversion. It is compatible with SIMATIC PDM, allowing for PC configuration and setup. Sonic Intelligence advanced echo-processing software provides increased reading reliability. The optional 1 or 3 relay models provide accurate level measurement functions only; these two models do not provide open channel flow, differential level measurement or volume conversion functions.

HydroRanger 200 uses proven continuous ultrasonic echo ranging technology to monitor water and wastewater of any consistency up to 15 m (50 ft) in depth. Achievable resolution is 0.1 % with accuracy to 0.25 % of range. Unlike contacting devices, HydroRanger 200 is immune to problems caused by suspended solids, harsh corrosives, grease or silt in the effluent, reducing downtime.

- Key Applications: wet wells, flumes/weirs, bar screen control

© Siemens 2020

Technical specifications

Mode of Operation	
Measuring principle	Ultrasonic level measurement
Measuring range	0.3 ... 15 m (1 ... 50 ft), transducer dependent
Measuring points	1 or 2
Input	
Analog	0 ... 20 mA or 4 ... 20 mA, from alternate device, scalable (6 relay model)
Discrete	10 ... 50 V DC switching level Logical 0 ≤ 0.5 V DC Logical 1 = 10 ... 50 V DC Max. 3 mA
Output	
EchoMax transducer	44 kHz
Ultrasonic transducer	Compatible transducers: ST-H and EchoMax series XPS-10, XPS 15/15F, and XRS-5
Relays[1]	Rating 5 A at 250 V AC, non-inductive
• Model with 1 relay[2]	1 SPST Form A
• Model with 3 relays[2]	2 SPST Form A/1 SPDT Form C
• Model with 6 relays	4 SPST Form A/2 SPDT Form C
mA output	0 ... 20 mA or 4 ... 20 mA
• Max. load	750 Ω, isolated
• Resolution	0.1 % of range
Accuracy	
Error in measurement	0.25 % of range or 6 mm (0.24 inch), whichever is greater
Resolution	0.1 % of measuring range or 2 mm (0.08 inch), whichever is greater[3]
Temperature compensation	• -50 ... +150 °C (-58 ... +302 °F) • Integral temperature sensor in transducer • External TS-3 temperature sensor (optional) • Programmable fixed temperature values
Rated operating conditions	
Installation conditions	
• Location	Indoor / outdoor
• Installation category	II
• Pollution degree	4
Ambient conditions	
• Ambient temperature (enclosure)	-20 ... +50 °C (-4 ... +122 °F)
• Storage temperature	-20 ... +50 °C (-4 ... +122 °F)

Design	
Weight	
• Wall mount	1.37 kg (3.02 lb)
• Panel mount	1.50 kg (3.31 lb)
Material (enclosure)	Polycarbonate
Degree of protection (enclosure)	
• Wall mount	IP65/Type 4X/NEMA 4X
• Panel mount	IP54/Type 3/NEMA 3
Cable	
• Transducer and mA output signal	2-core copper conductor, twisted, shielded, 300 Vrms, 0.82 mm² (18 AWG), Belden 8 760 or equivalent is acceptable
• Max. separation between transducer and transceiver	365 m (1 200 ft)
Displays and controls	100 x 40 mm (4 x 1.5 inch) multi-block LCD with backlighting
Programming	Programming using handheld programmer or via PC with SIMATIC PDM software
Power supply[4]	
AC version	100 ... 230 V AC ± 15 %, 50/60 Hz, 36 VA (17 W)
DC version	12 ... 30 V DC (20 W)
Certificates and approvals	• CE, RCM, EAC, KCC[5] • Lloyd's Register of Shipping • ABS Type Approval • FM, $CSA_{US/C}$, UL listed • $CSA_{US/C}$ Class I, Div. 2, Groups A, B, C, and D, Class II, Div. 2, Groups F and G, Class III, EAC Ex (wall mount only) • MCERTS Class 3 approved for Open Channel Flow
Communication	• RS 232 with Modbus RTU or ASCII via RJ-11 connector • RS 485 with Modbus RTU or ASCII via terminal blocks • Optional: SmartLinx cards for - PROFIBUS DP - DeviceNet

1) All relays certified for use with equipment that fails in a state at or under the rated maximums of the relays

2) This model is level control only; no open channel flow, differential level or volume conversion functions

3) Program range is defined as the empty distance to the face of the transducer plus any range extension

4) Maximum power consumption is listed

5) EMC performance available upon request

© Siemens 2020

Selection and ordering data

	Article No.
HydroRanger 100/200 Ultrasonic level controller ↗	**7ML5034-**
Continuous, non-contact, 15 m (50 ft) range. Monitors level, volume, and open channel flow in liquids, slurries, and solids.	■ ■ ■ ■ ■
↗ Click on the Article No. for the online configuration in the PIA Life Cycle Portal.	
Mounting	
Wall mount, standard enclosure	**1**
Wall mount, 4 entries, 4 M20 cable glands included	**2**
Panel mount[1]	**3**
Power supply	
100 ... 230 V AC	**A**
12 ... 30 V DC	**B**
Number of measurement points	
Single point model, 6 relays	**A**
Dual point model, 6 relays	**B**
Single point model, level only, 1 relay[2]	**C**
Single point model, level only, 3 relays[2]	**D**
Communication (SmartLinx)	
Without module	**0**
SmartLinx PROFIBUS DP module	**2**
SmartLinx DeviceNet module See SmartLinx product on page 4/348 for more information.	**3**
Approvals	
General Purpose CE, FM, $CSA_{US/C}$, UL listed, RCM, EAC, KCC	**1**
CSA Class I, Div. 2, Groups A, B, C, and D; Class II, Div. 2, Groups F and G; Class III, EAC Ex (for wall mount applications only)	**2**

1) Available with approval option 1 only.

2) This model is level control only; no open channel flow, differential level, or volume conversion functions.

	Order code
Further designs	
Please add "**-Z**" to Article No. and specify Order code(s).	
Stainless steel tag [69 x 50 mm (2.71 x 1.97 inch)]: Measuring-point number/identification (max. 27 characters) specify in plain text	**Y15**
Operating Instructions	
All literature is available to download for free, in a range of languages, at	
http://www.siemens.com/processinstrumentation/documentation	
Accessories	Article No.
Handheld programmer	**A5E36563512**
Tag, stainless steel, 12 x 45 mm (0.47 x 1.77 inch), one text line, suitable for enclosure	**7ML1930-1AC**
Sunshield kit, 304 stainless steel	**7ML1930-1GA**
USB to RS 232 adapter	**7ML1930-6AK**
SITRANS RD100, loop powered display - see Chapter 7	**7ML5741-...**
SITRANS RD150, remote digital display for 4 ... 20 mA and HART devices - see Chapter 7	**7ML5742-.....-....**
SITRANS RD200, universal input display with Modbus conversion - see Chapter 7	**7ML5740-...**
SITRANS RD300, dual line display with totalizer and linearization curve and Modbus conversion - see Chapter 7	**7ML5744-...**
SITRANS RD500 web, universal remote monitoring solution for instrumentation - see Chapter 7	**7ML5750-...**
Spare parts	
Power Supply Board (100 ... 230 V AC)	**7ML1830-1MD**
Power Supply Board (12 ... 30 V DC)	**7ML1830-1ME**
MultiRanger 100/200/HydroRanger 200 display, non-HMI	**7ML1830-1MF**
Removable terminal blocks	**A5E38824197**

© Siemens 2020

Dimensional drawings

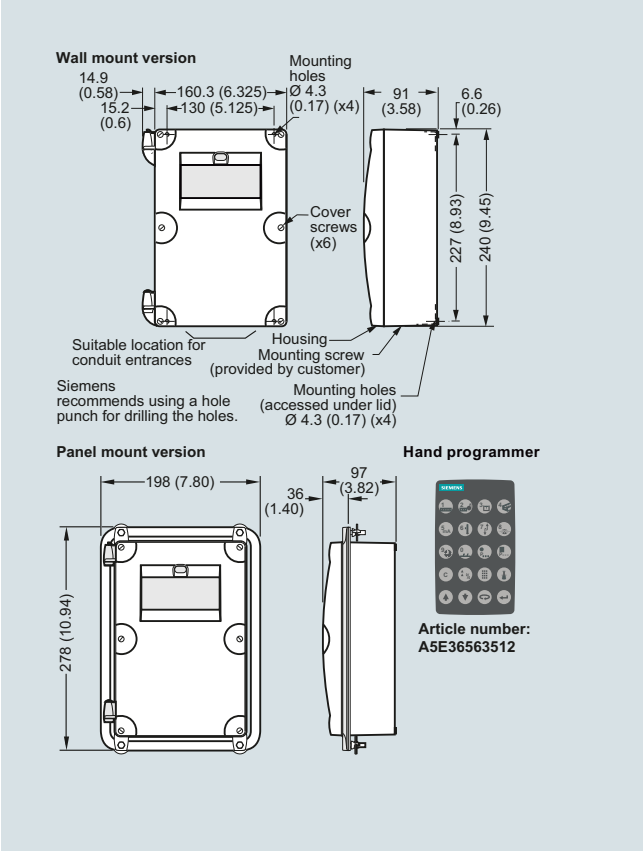

HydroRanger 200, dimensions in mm (inch)

Circuit diagrams

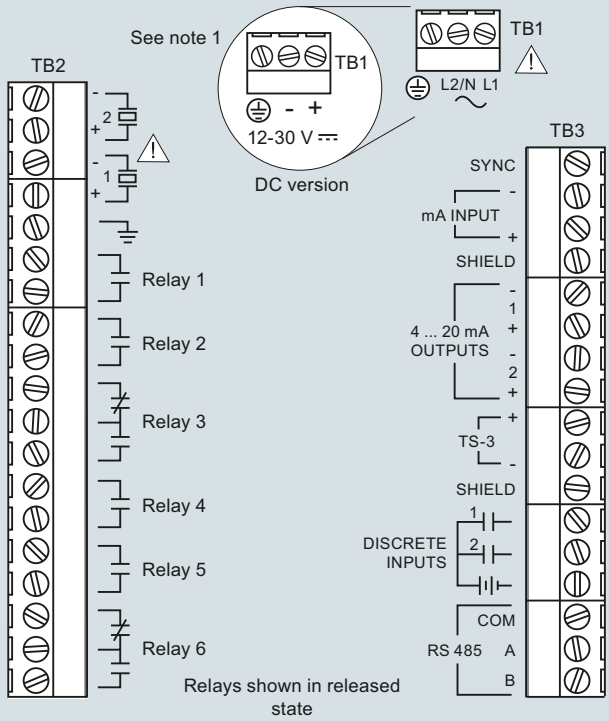

Notes

1. Use 2-core copper wire, twisted, with shield, for expansion up to 365 m (1 200 ft.). Route cable in grounded metal conduit, separate from other cables.
2. Verify that all system components are installed in accordance with instructions.
3. Connect all cable shields to the HydroRanger 200 shield connections. Avoid differential ground potentials by not connecting cable shields to ground (earth) anywhere else.
4. Keep exposed conductors on shielded cables as short as possible to reduce noise on the line caused by stray transmissions and noise pickup.

HydroRanger 200 connections

© Siemens 2020

Overview

Introduction

Ultrasonic measurement is based on the speed of sound. Sound can be used as a measurement tool because there is a measurable time lapse between sound generation and the "hearing" of the sound. This time lapse is then converted into usable information. Ultrasonic sensing equipment generates a sound above 20 000 Hz and then interprets the time lapse of the returned echo. The transducer creates the sound and senses the echo and then a transceiver interprets the sound and converts it into information.

Siemens ultrasonic units include Sonic Intelligence, a signal processing technology. Using unique algorithms, Sonic Intelligence differentiates between true echoes from the material and false echoes from obstructions or electrical noise, providing intelligent processing of echo profiles.

Typical System

Ultrasonic level measurement requires two components: one to generate the sound and catch the echo (transducer) and one to interpret the data and derive a measurement (transceiver). Even though some ultrasonic instruments combine the components in one unit, the individual functionality remains distinct. The measurement output is communicated to the unit, PLCs or PCs for process control.

Principle of Operation

A piezoelectric crystal inside the transducer converts an electrical signal into sound energy, firing a burst into the air which travels to the target and then is reflected back to the transducer. The transducer then acts as a receiving device and converts the sonic energy back into an electrical signal contained in the transceiver. An electronic signal processor analyzes the return echo and calculates the distance between the transducer and the target. The time lapse between firing the sound burst and receiving the return echo is directly proportional to the distance between the transducer and the material in the vessel. This basic principle lies at the heart of the ultrasonic measurement technology and is illustrated in the equation:
Distance = (Velocity of Sound x Time)/2.

Mode of operation

Common Terms

Attenuation

Denotes a decrease in signal magnitude in transmission from one point to another. Attenuation may be expressed as a scalar ratio of the input magnitude to the output magnitude or in decibels.

Beam angle

The diameter of a conical boundary centered around the axis of transmission when the power (radiating perpendicular to the transducer face on the axis of transmission) is reduced by half (-3 dB).

Blanking distance

Specified zone extending downward from the transducer face in which received echoes are ignored by the transceiver. Blanking distance ignores echoes from ringing.

Echo confidence

The recognition of the validity of the echo as material level. A measure of echo reliability.

Ringing

The inherent nature of the transducer to continue vibrating after the transmit pulse has ceased; the decay of the transmit pulse.

Transducer/Transceiver

A transducer provides the initial ultrasonic pulse and receives its echo. An ultrasonic transducer amplifies the sound wave created by the piezoelectric crystal and transmits that sound wave to the face of the transducer while at the same time dampening the sound wave from the other sides of the crystal.

Transceivers analyze the echo from the transducer to determine the required measurement.

© Siemens 2020

Technical specifications

Ultrasonic Transmitter Selection Guide

Criteria	SITRANS Probe LU	SITRANS Probe LU240	SITRANS LU150/LU180
Range	6 m (20 ft) or 12 m (40 ft)	0.2 ... 6 m (8 inch ... 20 ft) 0.2 ... 12 m (8 inch ... 40 ft)	0.25 ... 5 m (0.8 ... 16.4 ft)
Typical applications	Chemical storage vessels, filter beds, liquid storage vessels	Chemical storage vessels, filter beds, liquid storage vessels	Chemical storage vessels, filter beds, mud pits, liquid storage vessels, food applications
Output	HART model: 4 ... 20 mA/HART PROFIBUS PA model: PROFIBUS	4 ... 20 mA/HART	4 ... 20 mA loop powered
Communications	HART or PROFIBUS PA Options: SIMATIC PDM for remote configuration and diagnostics	HART, SIMATIC PDM	N/A
Power specifications	HART: 4 ... 20 mA, 24 V DC nominal, max. 550 Ω, 30 V DC PROFIBUS PA: 12, 13, 15, or 20 mA, dependent on programming	HART: 4 ... 20 mA, 10.5 ... 30 V DC	12 ... 30 V DC, 0.1 A surge, max. 600 Ω in the loop at 24 V DC
Approvals	CE, $CSA_{US/C}$, FM, RCM, ATEX, IECEx	FM, $CSA_{US/C}$, CE, RCM ATEX, IECEx, FM, INMETRO, NEPSI, SABS	CE, $CSA_{US/C}$, FM, ATEX, RCM, NEPSI, IECEx

A5E36563512

MultiRanger 100/200
HydroRanger 200
SITRANS Probe LU HART*
SITRANS LU

7ML5830-2AJ

SITRANS Probe LU PROFIBUS

* **Note:** To order the IS version of this hand programmer, order 7ML5830-2AH.

Handheld programmer selection guide

© Siemens 2020

Overview

SITRANS LU150 is a short-range integrated ultrasonic level transmitter. This general purpose, 2-wire, 4 to 20 mA loop powered transmitter is ideal for liquids, slurries, and bulk materials in open or closed vessels to 5 m (16.4 ft).

Benefits

- Easy to install, program, and maintain
- Accurate and reliable
- Sanitary models available
- Patented Sonic Intelligence echo processing
- Integral temperature compensation

Application

The transducer is available in PVDF copolymer, making the device suitable for use in a wide variety of applications.

SITRANS LU150 is easy to install and maintain, and can be quickly removed for cleaning as required by the food, beverage and pharmaceutical industries.

The reliability of the level data is based on the Sonic Intelligence echo processing algorithms. A filter discriminates between the true echo and false echoes from acoustic or electrical noises and agitator blades in motion. The ultrasonic pulse propagation time to the material and back is temperature-compensated and converted into distance for display, analog output.

- Key Applications: chemical storage vessels, filter beds, mud pits, liquid storage vessels, food applications

Configuration

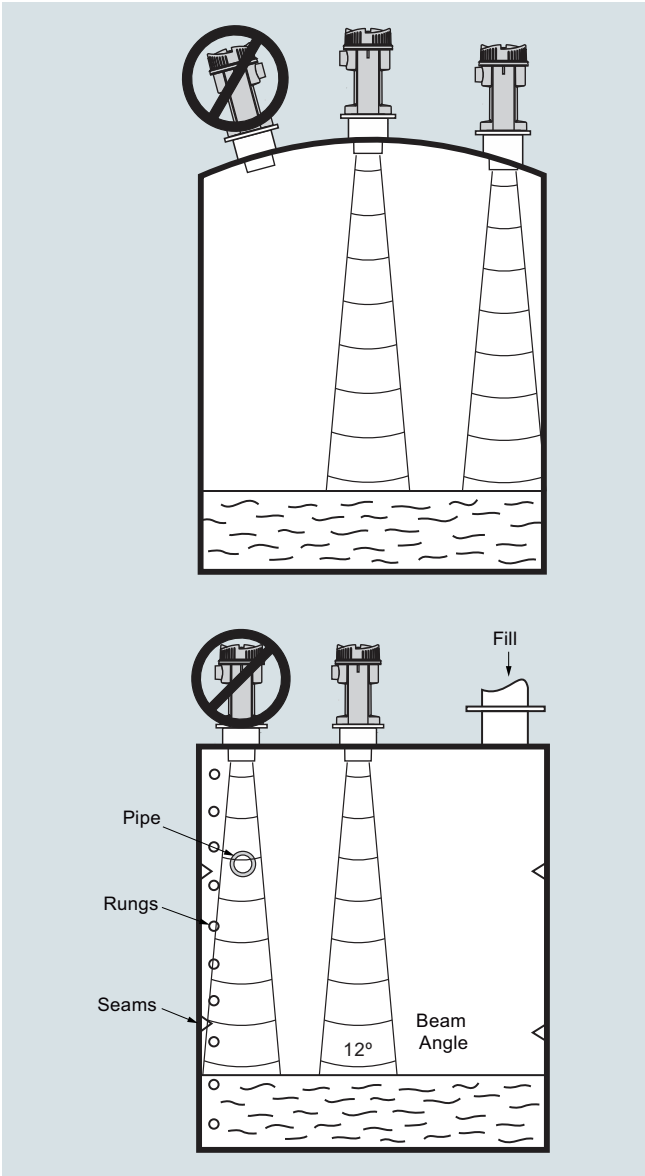

SITRANS LU150 mounting

© Siemens 2020

Technical specifications

Mode of Operation	
Measuring principle	Ultrasonic level measurement
Input	
Measuring range	0.25 ... 5 m (0.8 ... 16.4 ft)
Frequency	54 kHz
Output	
mA	4 ... 20 mA
• Span	Proportional/ inversely proportional
• Max. load	600 Ω in the loop at 24 V DC
Power supply	
Supply voltage	12 ... 30 V DC, 0.1 A surge
Max. power consumption	0.75 W (25 mA at 24 V DC)
Certificates and approvals	CE, $CSA_{US/C}$
Accuracy	
Error in measurement	0.25 % of measuring range (in air)
Resolution	3 mm (0.125 inch)
Temperature compensation	Built in
Echo processing	Sonic Intelligence
Rated operation conditions	
Beam angle	12°
Ambient temperature	
• Standard	-30 ... +60 °C (-22 ... +140 °F)
• Metallic mounting	-20 ... +60 °C (-4 ... +140 °F)
Storage temperature	
• Standard	-30 ... +60 °C (-22 ... +140 °F)
• Metallic mounting	-20 ... +60 °C (-4 ... +140 °F)
Max. static operating pressure	Normal atmospheric pressure
Design	
Weight	1.3 kg (2.9 lb)
Material	
• Electronics enclosure	PBT
• Transducer	PVDF copolymer
Degree of protection	IP68 / NEMA 6 / TYPE 6
Process connection	• 2" NPT [(Taper), ANSI/ASME B1.20.1] • R 2" [(BSPT), EN 10226] • G 2" [(BSPP), EN ISO 228-1] • 4" sanitary
Flange adapter	3" Universal, (fits DN 65, PN 10 and 3" ASME)
Cable inlet	1 inlet for M20, optional 1/2" NPT

Selection and ordering data

	Article No.
SITRANS LU150 Ultrasonic level transmitter ↗	**7ML5201-**
Continuous, non-contact, 5 m (16.4 ft) range. Monitors level in liquids and slurries. Basic level performance.	**0 ■ ■ 0**
↗ Click on the Article No. for the online configuration in the PIA Life Cycle Portal.	
Transducer/Process connection (PVDF)	
PVDF copolymer, 2" NPT [(Taper), ANSI/ASME B1.20.1]	**E**
PVDF copolymer, R 2" [(BSPT), EN 10226]	**F**
PVDF copolymer, G 2" [(BSPP), EN ISO 228-1]	**G**
PVDF copolymer, 4" Sanitary mounting	**J**
Cable inlet	
M20 x 1.5 [General Purpose cable gland -20 ... +60 °C (-4 ... +140 °F) included]	**B**
1/2" NPT stainless steel entry (no cable gland included)	**C**
Further designs	Order code
Please add "**-Z**" to Article No. and specify Order code(s).	
Stainless steel tag [13 x 45 mm (0.5 x 1.75 inch)]: Measuring-point number/identification (max. 20 characters) specify in plain text	**Y15**
Test certificate: Manufacturer's test certificate M to DIN 55350, Part 18 and to ISO 9000	**C11**
Operating Instructions	
All literature is available to download for free, in a range of languages, at	
http://www.siemens.com/processinstrumentation/documentation	
Accessories	Article No.
Tag, stainless steel, 12 x 45 mm (0.47 x 1.77 inch), one text line	**7ML1930-1AC**
Universal Box Bracket Mounting kit	**7ML1830-1BK**
Sanitary 4" mounting clamp	**7ML1830-1BR**
3" ASME, DN 65 PN 10, JIS 10K 3B ETFE Flange adapter for 2" NPT	**7ML1830-1BT**
3" ASME, DN 65 PN 10, JIS 10K 3B ETFE Flange adapter for 2" BSPT	**7ML1830-1BU**
2" BSP nylon plastic locknut	**7ML1830-1DQ**
2" NPT nylon plastic locknut	**7ML1830-1DT**
Cable Gland - General Purpose -20 ... +60 °C (-4 ... +140 °F)	**A5E34457564**

© Siemens 2020

Options

SITRANS LU150, Flange Adapter

The SITRANS LU150 can be fitted with the optional 75 (3) flange adapter for mating to 3" ANSI, DIN 65 PN10 and JIS 10K3B flanges.

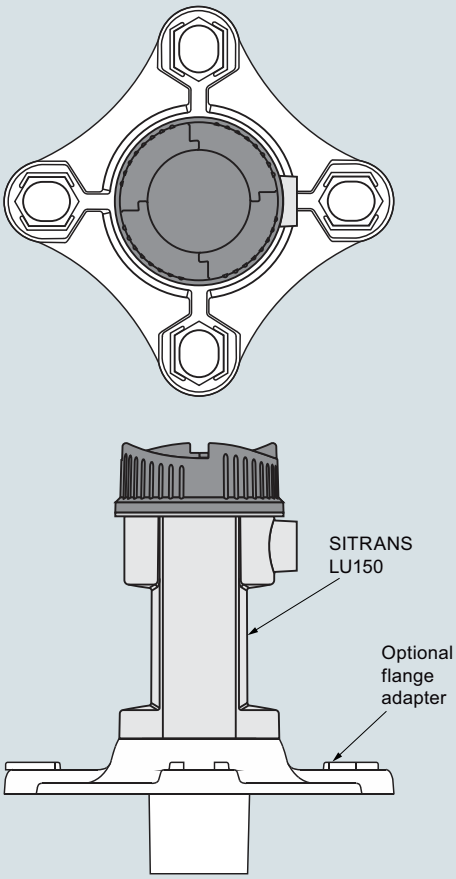

SITRANS LU150 optional flange adapter, dimensions in mm (inch)

© Siemens 2020

Dimensional drawings

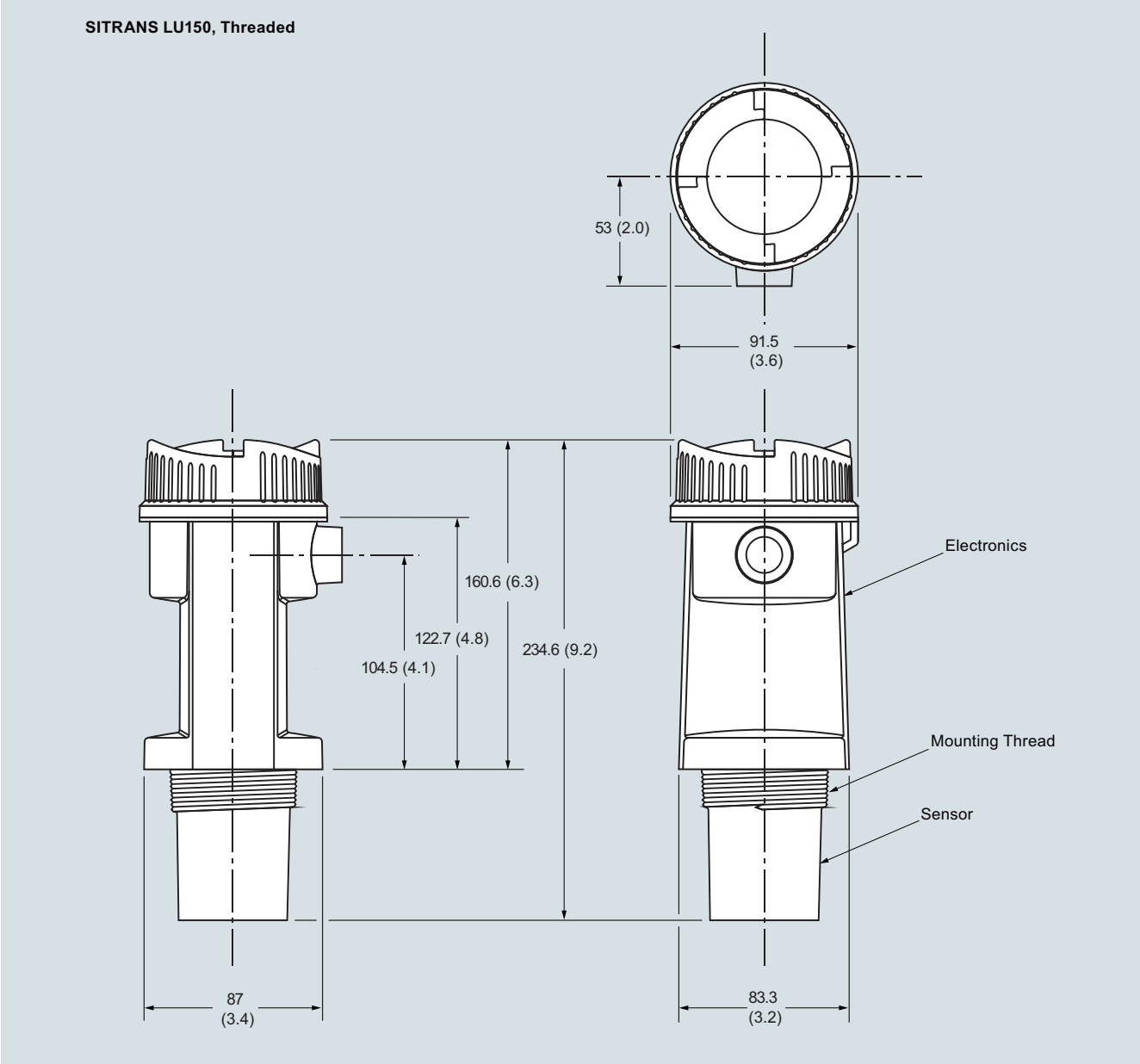

SITRANS LU150, dimensions in mm (inch)

© Siemens 2020

Dimensional drawings (continued)

SITRANS LU150, Sanitary

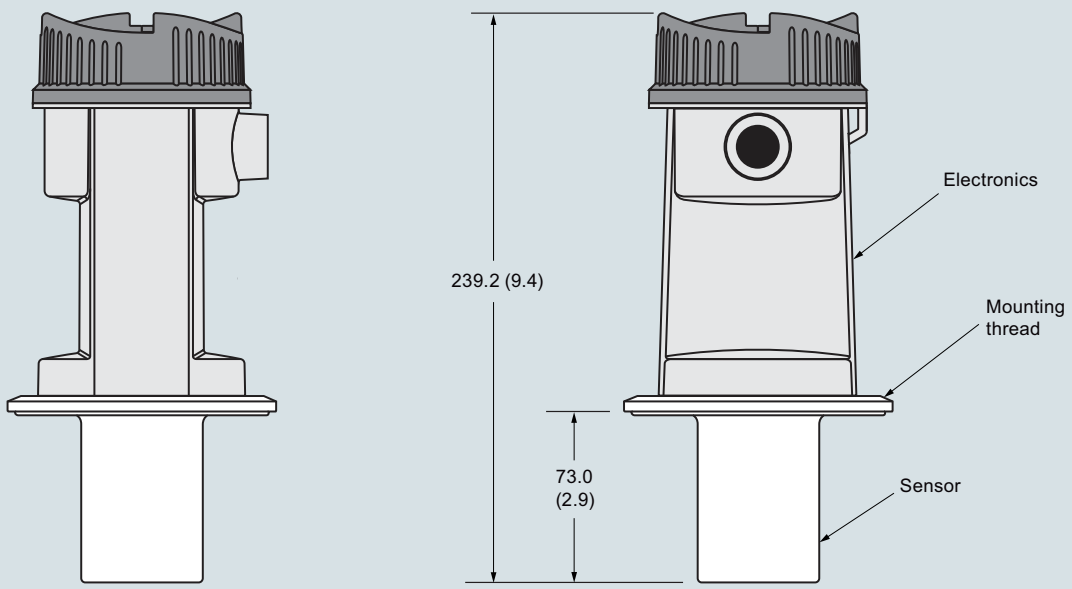

SITRANS LU150, dimensions in mm (inch)

Circuit diagrams

Threaded and Sanitary models

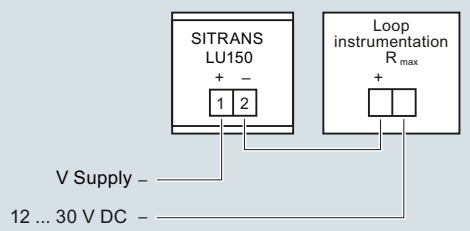

Display

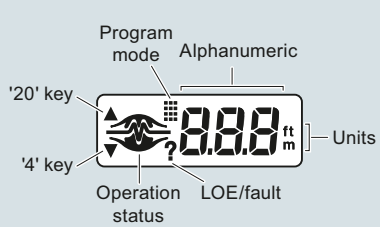

SITRANS LU150 connections

© Siemens 2020

Overview

SITRANS LU180 is a short-range integrated ultrasonic level transmitter. It is intrinsically safe (ATEX, CSA, FM, IECEx, NEPSI), 2 wire, 4 to 20 mA loop powered, ideal for liquids, slurries, and bulk materials in open or closed vessels to 5 meters (16.4 feet).

Benefits

- Easy to install, program, and maintain
- Accurate and reliable
- Sanitary models available
- Patented Sonic Intelligence echo processing
- Integral temperature compensation

Application

The transducer is available in PVDF copolymer, making the device suitable for use in a wide variety of applications.
SITRANS LU180 is easy to install and maintain, and can be quickly removed for cleaning as required by the food, beverage and pharmaceutical industries. The reliability of the level data is based on the Sonic Intelligence echo processing algorithms. A filter discriminates between the true echo and false echoes from acoustic or electrical noises and agitator blades in motion. The ultrasonic pulse propagation time to the material and back is temperature compensated and converted into distance for display, analog output.

- Key Applications: chemical storage vessels, filter beds, mud pits, liquid storage vessels, food applications

Configuration

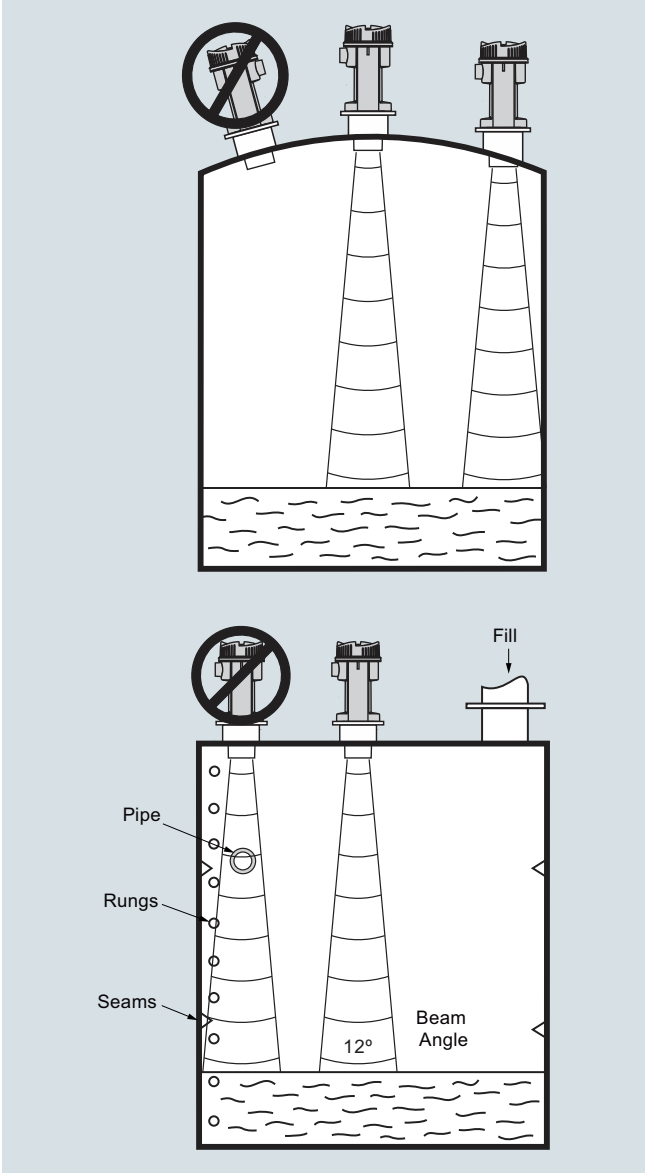

SITRANS LU180 mounting

© Siemens 2020

Technical specifications

Mode of operation	
Measuring principle	Ultrasonic level measurement
Input	
Measuring range	0.25 ... 5 m (0.8 ... 16.4 ft)
Frequency	54 kHz
Output	
mA	4 ... 20 mA
• Span	Proportional/ inversely proportional
• Max. load	600 Ω in the loop at 24 V DC
Power supply	
Supply voltage	12 ... 30 V DC, 0.1 A surge
Max. power consumption	0.75 W (25 mA at 24 V DC)
Certificates and approvals	CSA: IS/ Class I, II, III, Div. 1, Groups: A, B, C, D, E, F, G T4 FM: IS/ Class I, II, III, Div. 1, Groups: A, B, C, D, E, F, G T4 ATEX: II 1G Ex ia IIC T4 Ga IECEx Ex ia IIC T4 Ga NEPSI Ex ia IIC T4 Ga
Accuracy	
Error in measurement	0.25 % of measuring range (in air)
Resolution	3 mm (0.125 inch)
Temperature compensation	Built in
Echo processing	Sonic Intelligence
Rated operation conditions	
Beam angle	12°
Ambient temperature	
• Standard	-40 ... +60 °C (-40 ... +140 °F)
• Metallic mounting	-20 ... +60 °C (-4 ... +140 °F)
Storage temperature	
• Standard	-40 ... +60 °C (-40 ... +140 °F)
• Metallic mounting	-20 ... +60 °C (-4 ... +140 °F)
Max. static operating pressure	Normal atmospheric pressure
Design	
Weight	1.3 kg (2.9 lb)
Material	
• Electronics enclosure	PBT
• Transducer	PVDF copolymer
Degree of protection	IP68 / NEMA 6 / TYPE 6
Process connection	• 2" NPT [(Taper), ANSI/ASME B1.20.1] • R 2" [(BSPT), EN 10226] • G 2" [(BSPP), EN ISO 228-1] • 4" sanitary
Flange adapter	3" Universal (fits DN 65, PN 10 and 3" ASME)
Cable inlet	1 inlet for M20, optional 1/2" NPT

Selection and ordering data

	Article No.
SITRANS LU180 Ultrasonic level transmitter ↗ Continuous, non-contact, 5 m (16.4 ft) range. Monitors level in liquids and slurries. Basic level performance for intrinsically safe applications. ↗ Click on the Article No. for the online configuration in the PIA Life Cycle Portal.	**7ML5202-** **0 ■ ■ 0**
Transducer/Process connection	
PVDF copolymer, 2" NPT [(Taper), ANSI/ASME B1.20.1]	**E**
PVDF copolymer, R 2" [(BSPT), EN 10226]	**F**
PVDF copolymer, G 2" [(BSPP), EN ISO 228-1]	**G**
PVDF copolymer, 4" Sanitary mounting	**J**
Cable inlet	
M20 x 1.5 [General Purpose cable gland -20 ... +60 °C (-4 ... +140 °F) included]	**B**
1/2" NPT stainless steel entry (no cable gland included)	**C**
Further designs	Order code
Please add "**-Z**" to Article No. and specify Order code(s).	
Stainless steel tag [13 x 45 mm (0.5 x 1.75 inch)]: Measuring-point number/identification (max. 20 characters) specify in plain text	**Y15**
Test certificate: Manufacturer's test certificate M to DIN 55350, Part 18 and to ISO 9000	**C11**
Operating Instructions	
All literature is available to download for free, in a range of languages, at	
http://www.siemens.com/processinstrumentation/documentation.	
Accessories	Article No.
Tag, stainless steel, 12 x 45 mm (0.47 x 1.77 inch), one text line	**7ML1930-1AC**
Universal box bracket mounting kit	**7ML1830-1BK**
Sanitary 4" mounting clamp	**7ML1830-1BR**
3" ASME, DN 65 PN 10, JIS 10K 3B ETFE Flange adapter for 2" NPT	**7ML1830-1BT**
3" ASME, DN 65 PN 10, JIS 10K 3B ETFE Flange adapter for 2" BSPT	**7ML1830-1BU**
2" BSP nylon plastic locknut	**7ML1830-1DQ**
2" NPT nylon plastic locknut	**7ML1830-1DT**
Cable Gland, General Purpose -20 ... +60 °C (-4 ... +140 °F)	**A5E34457564**

© Siemens 2020

Options

SITRANS LU180, Flange Adapter

The SITRANS LU180 can be fitted with the optional 75 (3) flange adapter for mating to 3" ANSI, DIN 65 PN10 and JIS 10K3B flanges.

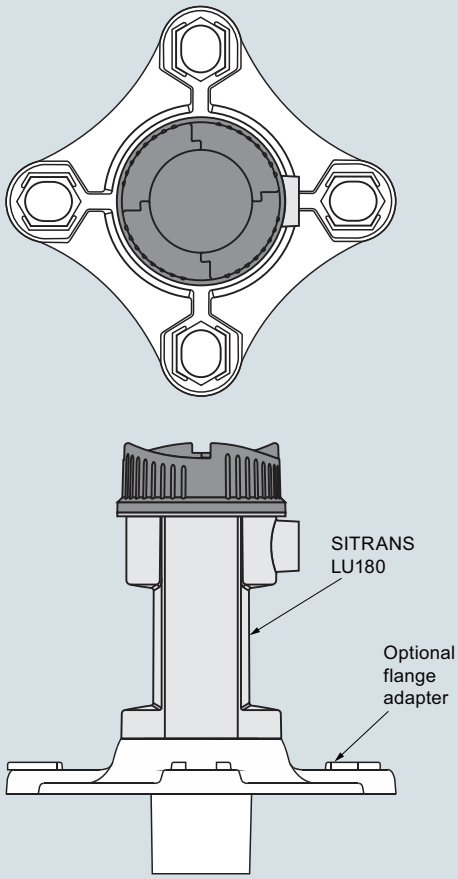

SITRANS LU180 optional flange adapter, dimensions in mm (inch)

© Siemens 2020

Dimensional drawings

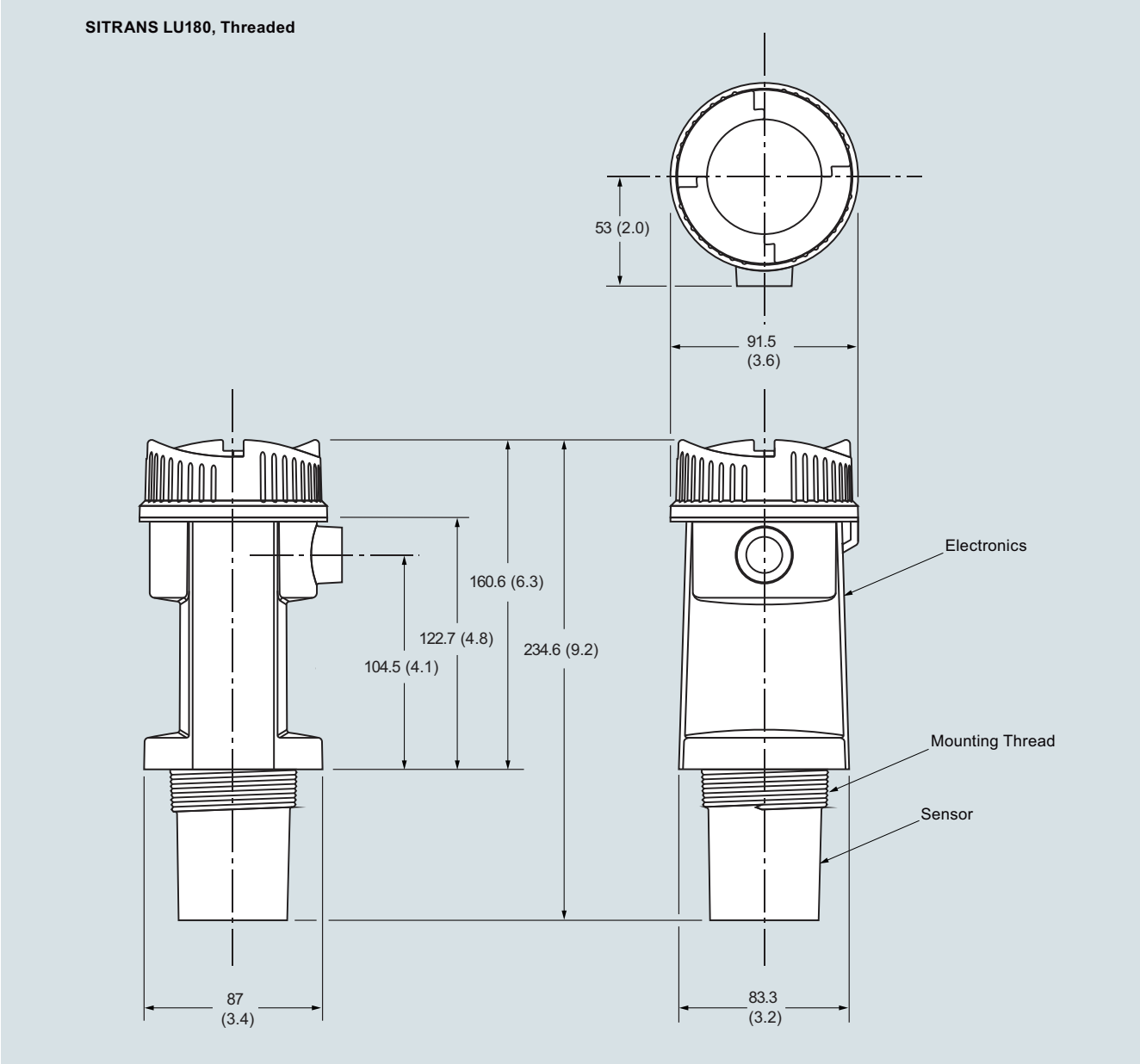

SITRANS LU180, dimensions in mm (inch)

© Siemens 2020

Dimensional drawings (continued)

SITRANS LU180, Sanitary

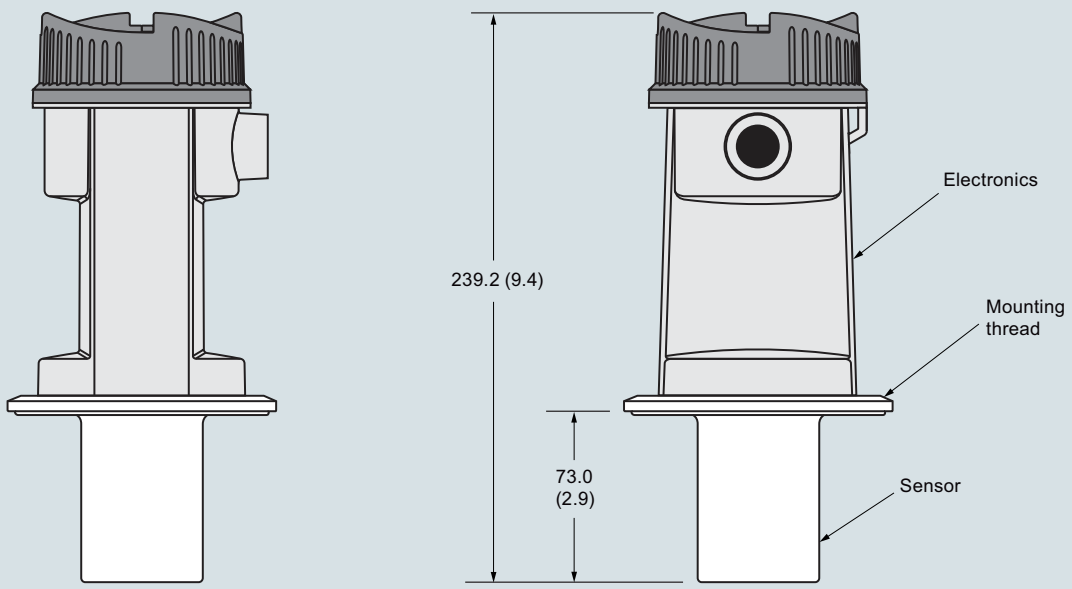

SITRANS LU180, dimensions in mm (inch)

Circuit diagrams

SITRANS LU180, Threaded and sanitary models

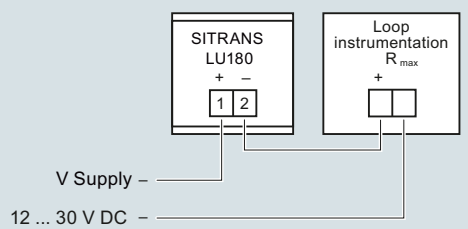

Display

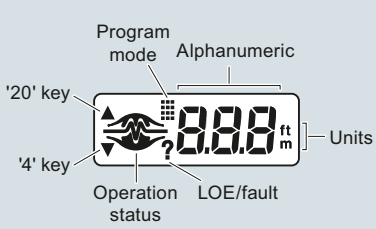

SITRANS LU180 connections

© Siemens 2020

Overview

SITRANS Probe LU is a 2-wire loop powered ultrasonic transmitter for level, volume and flow monitoring of liquids in open channels, storage vessels, and simple process vessels.

Benefits

- Continuous level measurement up to 12 m (40 ft) range
- Easy installation and simple startup
- Programming using infrared Intrinsically Safe handheld programmer, SIMATIC PDM or HART Communicator
- Communication using HART or PROFIBUS PA
- ETFE or PVDF transducers for chemical compatibility
- Sonic Intelligence signal processing
- Auto False-Echo Suppression for fixed obstruction avoidance
- Level to volume or level to flow conversion

Application

The SITRANS Probe LU is ideal for level monitoring in the water and wastewater industry, chemical storage vessels, and small bulk hoppers.

The range of SITRANS Probe LU is 6 or 12 m (20 or 40 ft). Using Sonic Intelligence, Auto False Echo Suppression for fixed obstruction avoidance, and accuracy of 0.15 % of range or 6 mm (0.25 inch), the Probe LU provides unmatched reliability.

The Probe LU offers two communications options: HART or PROFIBUS PA (Profile version 3.0, Class B).

The transducer on the Probe LU is available as ETFE or PVDF to suit the chemical conditions of your application. As well, for applications with varying material and process temperatures, the Probe LU incorporates an internal temperature sensor to compensate for temperature changes.

- Key Applications: chemical storage vessels, filter beds, liquid storage vessels

Configuration

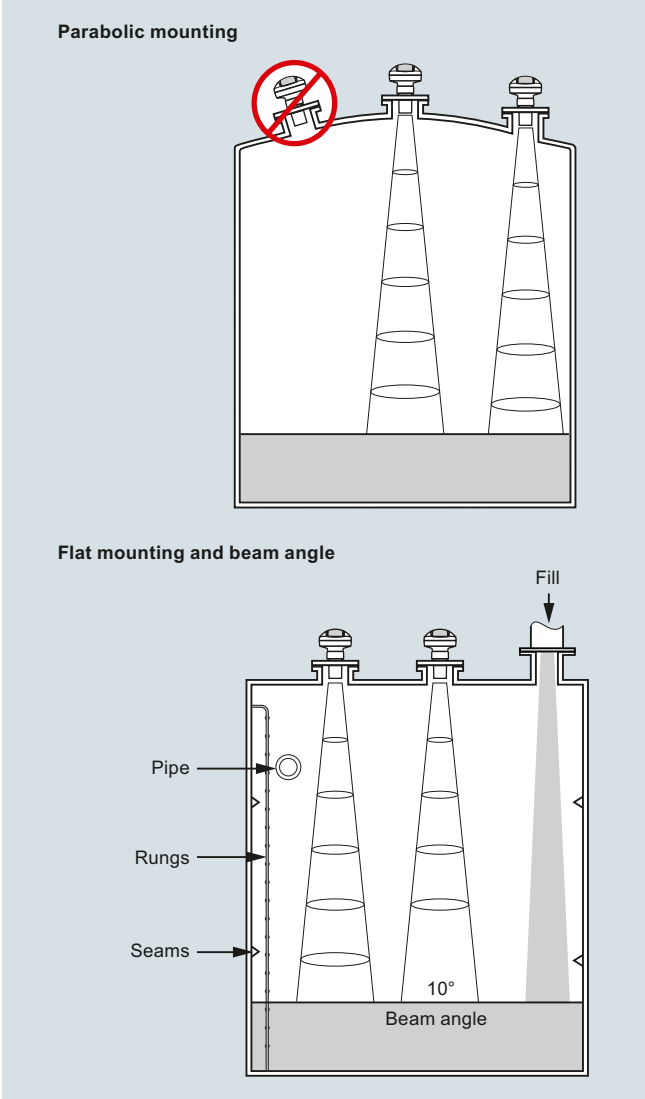

SITRANS Probe LU mounting

© Siemens 2020

Technical specifications

Mode of operation	
Measuring principle	Ultrasonic level measurement
Typical application	Level measurement in storage vessels and simple process vessels
Inputs	
Measuring range	
• 6 m (20 ft) model	0.25 ... 6 m (10 inch ... 20 ft)
• 12 m (40 ft) model	0.25 ... 12 m (10 inch ... 40 ft)
Frequency	54 kHz
Outputs	
mA/HART	
• Range	4 ... 20 mA
• Accuracy	± 0.02 mA
PROFIBUS PA	Profile 3, Class B
Performance	
Resolution	≤ 3 mm (0.12 inch)
Accuracy	± the greater of 0.15 % of range or 6 mm (0.24 inch)
Repeatability	≤ 3 mm (0.12 inch)
Blanking distance	0.25 m (10 inch)
Update time	≤ 5 s
• 4/20 mA/HART version	≤ 5 s at 4 mA
• PROFIBUS version	≤ 4 s at 15 mA current loop
Temperature compensation	Built-in to compensate over temperature range
Beam angle	10°
Rated operating conditions	
Ambient conditions	
• Location	Indoor/outdoor
• Ambient temperature	-40 ... +80 °C (-40 ... +176 °F)
• Storage temperature	-40 ... +80 °C (-40 ... +176 °F)
• Relative humidity/ingress protection	Suitable for outdoor
• Installation category	I
• Pollution degree	4
Medium conditions	
• Temperature at flange or threads	-40 ... +85 °C (-40 ... +185 °F)
• Pressure (vessel)	0.5 bar g (7.25 psi g)
Design	
Material (enclosure)	PBT (Polybutylene Terephthalate)
Degree of protection	Type 4X/NEMA 4X, Type 6/NEMA 6/IP67/IP68 enclosure
Weight	2.1 kg (4.6 lb)
Cable inlet	2 x M20 x 1.5 cable gland or 2 x ½" NPT thread or 1 x M20 x 1.5 and 1 x ½" NPT
Material (transducer)	Buna-N seal with ETFE (Ethylene Tetrafluoroethylene) or PVDF (Polyvinylidene Fluoride)

Process connection	
Threaded connection	2" NPT [(Taper), ANSI/ASME B1.20.1] R 2" [(BSPT), EN 10226] or G 2" [(BSPP), EN ISO 228-1]
Flange connection	3 inch (80 mm) universal flange
Other connection	FMS 200 mounting bracket (see page 5/189) or customer supplied mount
Display and Controls	
Interface	Local: LCD display with bar graph Remote: Available via HART or PROFIBUS PA
Configuration	Using Siemens SIMATIC PDM (PC) or HART handheld communicator or Siemens infrared handheld programmer
Memory	Non-volatile EEPROM
Power supply	
4 ... 20 mA/HART	Nominal 24 V DC with 550 Ω maximum; maximum 30 V DC 4 ... 20 mA
PROFIBUS PA	12, 13, 15, or 20 mA depending on programming (General Purpose or Intrinsically Safe version) per IEC 61158-2
Certificates and Approvals	
General	$CSA_{US/C}$, FM, CE, RCM
Marine (only applies to HART communication option)	• Lloyd's Register of Shipping • ABS Type Approval
Hazardous	
• Intrinsically Safe (Europe)	ATEX II 1G Ex ia IIC T4 Ga
• Intrinsically Safe (USA/Canada)	CSA/FM, Class I, Div. 1, Groups A, B, C, D; Class II, Div. 1, Groups E, F, G; Class III T4
• Intrinsically Safe (International)	SIR 13.0008X Ex ia IIC T4 Ga
• Intrinsically Safe (Brazil)	INMETRO Ex ia IIC T4 Ga
• Non-incendive (USA)	FM Class I, Div. 2, Groups A, B, C, D T4
Handheld Programmer	
Intrinsically Safe Siemens handheld programmer	Infrared receiver
• Approvals for handheld programmer	ATEX II 1GD / IECEx SIR 09.0073 Ex ia IIC T4 Ga Ex iaD 20 T135 °C FM/CSA Class I, II, III, Div. 1, Groups A, B, C, D, E, F, G T6
Ambient temperature	-20 ... 50 °C (-5 ... 122 °F)
Interface	Proprietary infrared pulse signal
Power	3 V lithium battery (non-replaceable)

© Siemens 2020

Selection and ordering data

	Article No.
SITRANS Probe LU Ultrasonic level transmitter ↗	**7ML5221-** ■■■■■
Continuous, non-contact, up to 12 m (40 ft) range. Monitors level and volume in liquids and slurries. With optional PROFIBUS PA.	
↗ Click on the Article No. for the online configuration in the PIA Life Cycle Portal.	
Enclosure/Cable Inlet	
Plastic (PBT), 1 x M20 x 1.5 and 1 x ½" NPT (no cable glands supplied)	**0**
Plastic (PBT), 2 x M20 x 1.5 (includes 1 general purpose cable gland: 7ML1930-1AM)	**1**
Plastic (PBT), 2 x ½" NPT (no cable glands supplied)	**2**
Range/Transducer material	
6 m (20 ft), ETFE	**A**
6 m (20 ft), PVDF Copolymer	**B**
12 m (40 ft), ETFE	**C**
12 m (40 ft), PVDF Copolymer	**D**
Process connection	
2" NPT [(Taper), ANSI/ASME B1.20.1]	**A**
R 2" [(BSPT), EN 10226]	**B**
G 2" [(BSPP), EN ISO 228-1]	**C**
Communication/Output	
4 ... 20 mA, HART	**1**
PROFIBUS PA	**2**
Approvals	
General Purpose, FM, $CSA_{US/C}$, CE, RCM, KCC	**1**
Non-incendive, FM Class I, Div. 2, Groups A, B, C, D T5[1)]	**4**
Intrinsically Safe, CSA/FM Class I, Div. 1, Groups A, B, C, D; Class II, Div. 1, Groups E, F, G; Class III T4[2)]	**5**
Intrinsically Safe ATEX 1G/IECEx/INMETRO Ex ia IIC T4 Ga, RCM, KCC[2)]	**6**
Intrinsically Safe ATEX 1G/IECEx/INMETRO Ex ia IIC T4 Ga, RCM, KCC[3)]	**7**
Intrinsically safe, CSA/FM Class I, Div. 1, Groups A, B, C, D; Class II, Div. 1, Groups E, F, G; Class III T4[3)]	**8**

1) Available with Enclosure/Cable Inlet option 2 only.
2) Available with Communication option 2 only.
3) Available with Communication option 1 only.

	Order code
Further designs	
Please add "**-Z**" to Article No. and specify Order code(s).	
Stainless steel tag [69 x 50 mm (2.71 x 1.97 inch)]: Measuring-point number/identification (max. 27 characters) specify in plain text	**Y15**
Operating Instructions for HART/mA device	
All literature is available to download for free, in a range of languages, at	
http://www.siemens.com/processinstrumentation/documentation.	
Accessories	Article No.
Handheld programmer, Intrinsically Safe, EEx ia	**7ML5830-2AH**
Handheld programmer, General Purpose approvals	**A5E36563512**
Handheld programmer, Infrared, Intrinsically Safe, PROFIBUS PA	**7ML5830-2AJ**
HART modem/USB (for use with a PC and SIMATIC PDM)	**7MF4997-1DB**
2" BSP nylon plastic locknut	**7ML1830-1DQ**
2" NPT nylon plastic locknut	**7ML1830-1DT**
3" ASME, DN 65 PN 10, JIS 10K 3B ETFE Flange adapter for 2" NPT	**7ML1830-1BT**
3" ASME, DN 65 PN 10, JIS 10K 3B ETFE Flange adapter for 2" BSPT	**7ML1830-1BU**
One General Purpose polymeric cable gland M20 x 1.5, rated for -20 ... +80 °C (-4 ... +176 °F)	**7ML1930-1AM**
One metallic cable gland M20 x 1.5, rated -40 ... +80 °C (-40 ... +176 °F) for General Purpose or ATEX EEx e installations (available for HART only)	**7ML1930-1AP**
One metallic cable gland M20 x 1.5, rated -40 ... +80 °C (-40 ... +176 °F) with integrated shield connection (available for PROFIBUS PA)	**7ML1930-1AQ**
Universal box bracket, FMS-200	**7ML1830-1BK**
Probe LU rock guard and sunshield	**7ML1930-1GH**
SITRANS RD100, loop powered display - see Chapter 7	**7ML5741-.....-.**
SITRANS RD150, remote digital display for 4 ... 20 mA and HART devices - see Chapter 7	**7ML5742-.....-....**
SITRANS RD200, universal input display with Modbus conversion - see Chapter 7	**7ML5740-.....-..**
SITRANS RD300, dual line display with totalizer and linearization curve and Modbus conversion - see Chapter 7	**7ML5744-.....-..**
For applicable back up point level switch see point level measurement section.	
Spare Parts	
Plastic lid	**7ML1830-1KB**

© Siemens 2020

Options

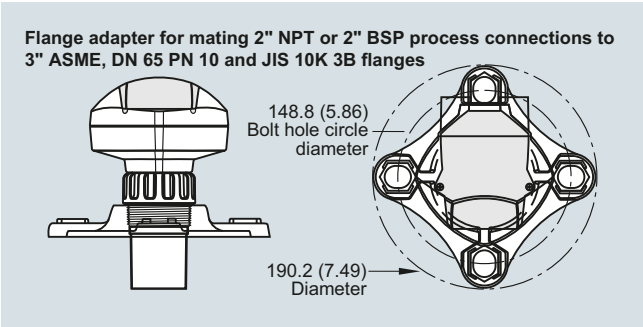

SITRANS Probe LU optional flange adapter, dimensions in mm (inch)

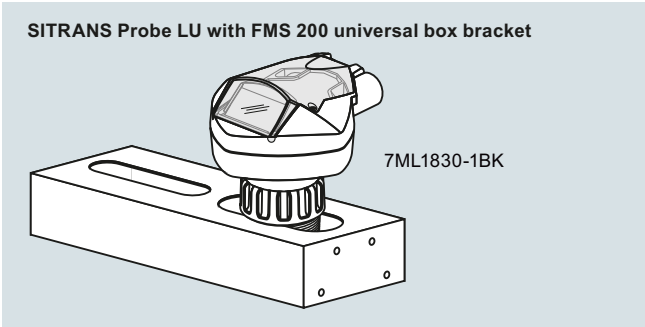

SITRANS Probe LU with optional mounting bracket

Dimensional drawings

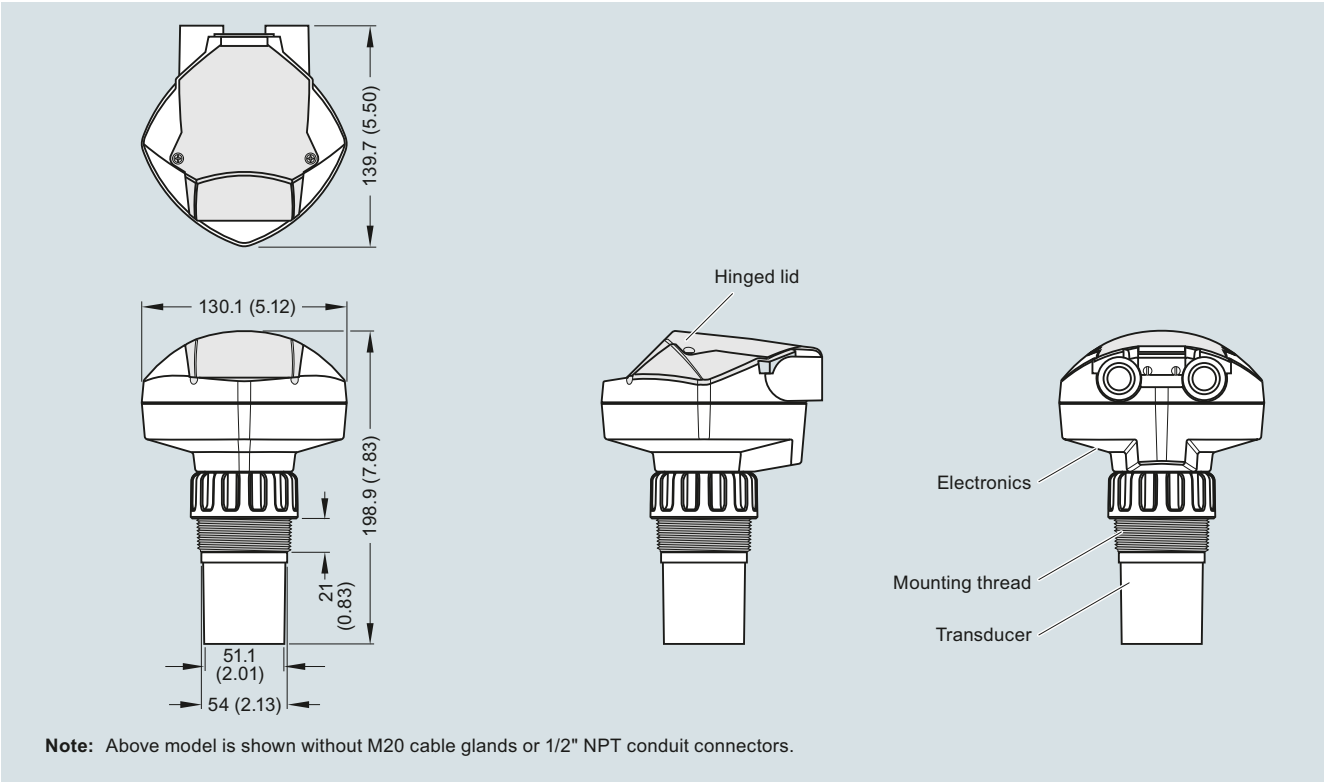

Note: Above model is shown without M20 cable glands or 1/2" NPT conduit connectors.

SITRANS Probe LU, dimensions in mm (inch)

© Siemens 2020

Circuit diagrams

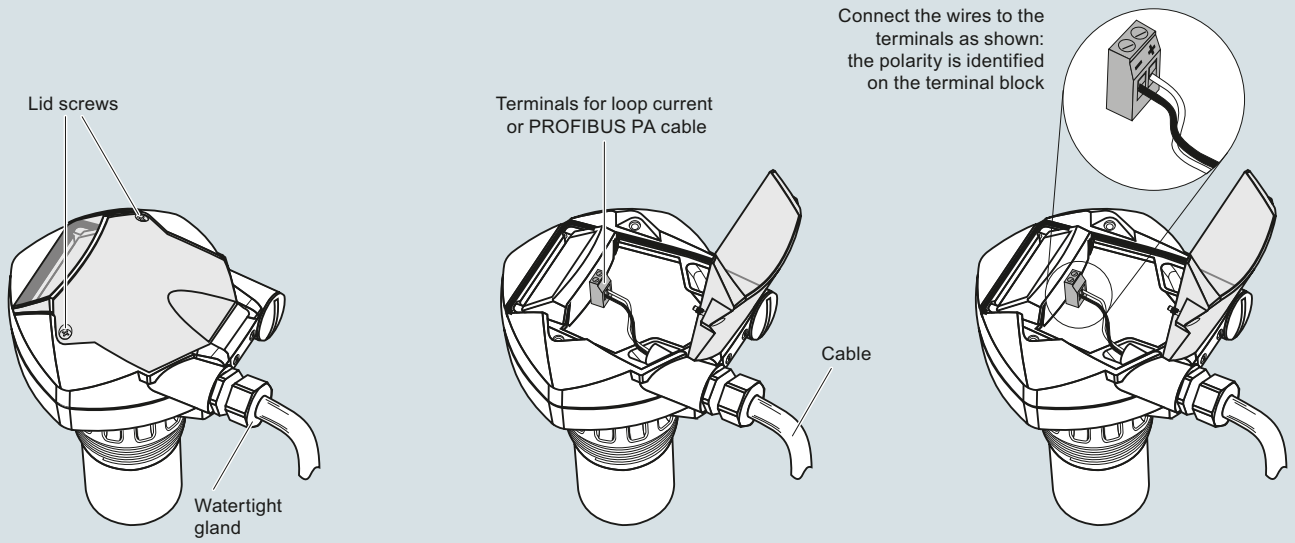

Note:

- HART model above is shown with M20 cable glands. 1/2" NPT threaded connection is also available.
- DC terminal shall be supplied from an SELV source in accordance with IEC-1010-1 Annex H.
- All field wiring must have insulation suitable for rated input voltages.
- Separate cables and conduit may be required to conform to standard instrumentation wiring practices or electrical codes.

SITRANS Probe LU connections

© Siemens 2020

Overview

SITRANS Probe LU240 ultrasonic level transmitter, ideal for level, volume, and volume flow measurements. It works with liquids, slurries, and bulk materials up to 12 m (40 ft).

Benefits

- Continuous level measurement up to 12 m (40 ft) range
- Easy installation and simple startup
- Programming using 4-button HMI or SIMATIC PDM
- Communication using HART
- ETFE or PVDF transducers for chemical compatibility
- Process Intelligence signal processing
- Auto False Echo Suppression for fixed obstruction avoidance
- Low power and current startup

Application

SITRANS Probe LU240 is ideal for level monitoring in the water and wastewater industry, chemical storage vessels, and small bulk hoppers.

The range of SITRANS Probe LU240 is 3, 6, or 12 m (10, 20, or 40 ft). Probe LU240 provides unmatched reliability, using Process Intelligence, Auto False Echo Suppression for fixed obstruction avoidance, and accuracy of 0.15 % of range or 6 mm (0.25 inch) (on 6 m and 12 m models only).

SITRANS Probe LU240 offers HART communication on certain models and mA output on all models.

The transducer on the Probe LU240 is available as ETFE or PVDF to suit the chemical conditions of your application. As well, for applications with varying material and process temperatures, Probe LU240 incorporates an internal temperature sensor to compensate for temperature changes.

- Key Applications: chemical storage vessels, filter beds, liquid storage vessels

Configuration

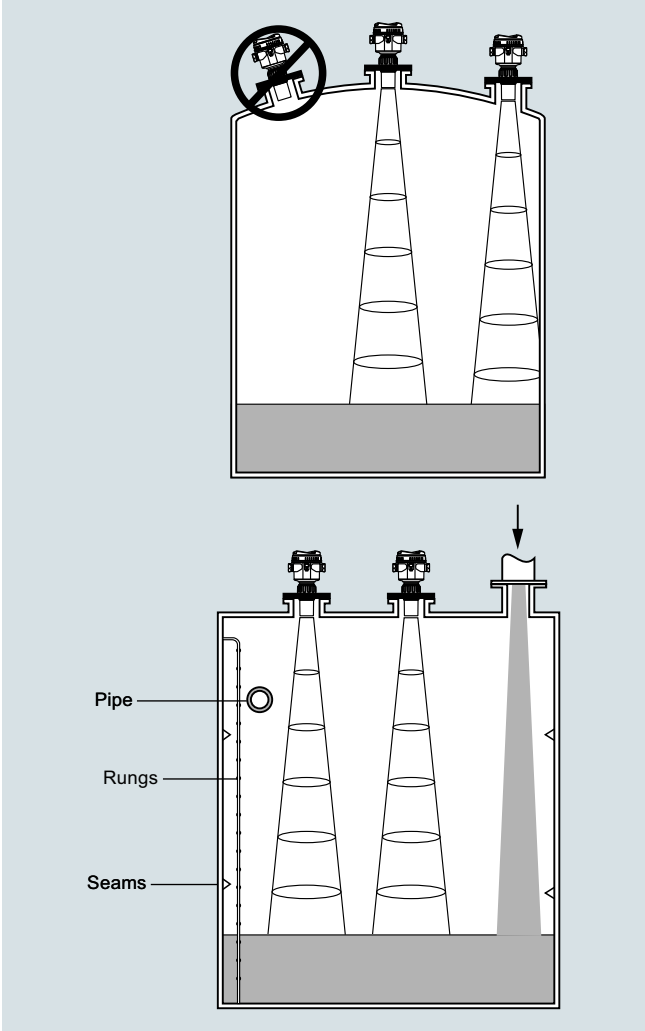

SITRANS Probe LU240 mounting

© Siemens 2020

Technical specifications

Mode of operation	
Measuring principle	Ultrasonic level measurement
Typical application	Level measurement in storage vessels and simple process vessels
Inputs	
Measuring range	
• 3 m (10 ft)	0.2 ... 3 m (8 inch ... 10 ft)
• 6 m (20 ft) model	0.2 ... 6 m (8 inch ... 20 ft)
• 12 m (40 ft) model	0.2 ... 12 m (8 inch ... 40 ft)
Frequency	54 kHz
Outputs	
mA/HART	
• Range	4 ... 20 mA
• Accuracy	± 0.02 mA
• HART version	7
• Startup current	3.6 mA
• Fail-safe	Programmable as high, low, or hold (loss of echo) per NAMUR NE43
Performance	
Resolution	≤ 3 mm (0.12 inch)
Accuracy	
3 m (10 ft)	10 mm (0.39 inch)
6 m (20 ft), 12 m (40 ft)	± the greater of 0.15 % of range or 6 mm (0.25 inch) [valid from 0.25 m (0.82 ft)]
Non-repeatability	≤ 3 mm (0.12 inch)
Blanking distance	0.2 m (0.66 ft)
Update time	≤ 4 s
Temperature compensation	Built-in to compensate over temperature range
Beam angle	10°
Rated operating conditions	
Ambient conditions	
• Location	Indoor/outdoor
• Ambient temperature	• Storage: -40 ... +85 °C (-40 ... +185 °F) • Operating: -40 ... +80 °C (-40 ... +176 °F)
• Relative humidity/ingress protection	Suitable for outdoor
• Installation category	I
• Pollution degree	4
Medium conditions	
• Temperature at flange or threads	-40 ... +85 °C (-40 ... +185 °F)
• Pressure (vessel)	0.5 bar g (7.25 psi g)
Display	-20 … +80 °C (-4 … +176 °F)
Design	
Material (enclosure)	PBT (Polybutylene Terephthalate)
Degree of protection	Type 4X, Type 6, IP66, IP68
Weight	0.93 kg (2.1 lb)
Cable inlet	2 x M20 x 1.5 cable gland or 1 x ½" NPT thread
Material (transducer)	ETFE (Ethylene Tetrafluoroethylene) or PVDF (Polyvinylidene Fluoride) Buna-N seal

Process connection	
Threaded connection	2" NPT [(Taper), ASME B1.20.1] R 2" [(BSPT), EN 10226] or G 2" [(BSPP), EN ISO 228-1]
Flange connection	3 inch (80 mm) universal flange
Other connection	FMS 200 mounting bracket (see page 4/186) or customer supplied mount
Display and Controls	
Interface	Local: LCD display Remote: Available via HART
Configuration	4-button HMI
Memory	Non-volatile EEPROM, no battery required
Power supply	
4 ... 20 mA/HART	10.5 ... 30 V DC
Certificates and Approvals	
General	FM, $_{C}$CSA$_{US}$, CE, RCM, EAC, KC, VLAREM
Hazardous	
• Intrinsically Safe	
- Europe	ATEX II 1G Ex ia IIC T4 Ga
- International	IECEx SIR 18.0013X Ex ia IIC T4 Ga
- USA/Canada	FM/$_{C}$CSA$_{US}$ Class I, Div. 1, Groups A, B, C, D, Class II, Div. 1, Groups E, F, G, Class III T4
- Brazil	INMETRO Ex ia IIC T4 Ga
- China	NEPSI Ex ia IIC T4 Ga
- South Africa	SABS Ex ia IIC Tx Ga
- Russia	EAC Ex 1G Ex ia IIC T4 Ga
- Korea	KOSHA KSs Ex ia IIC T4
• Non-incendive	
- USA	FM, Class I, Div. 2, Groups A, B, C, D Tx
Marine	Lloyd's Register, American Bureau of Shipping (ABS), DNV GL, Bureau Veritas, CCS
Metrological	MCERTS, CPA, Kazakhstan pattern approval

© Siemens 2020

Selection and ordering data

	Article No.
SITRANS Probe LU240 Ultrasonic level transmitter ↗ Continuous, non-contact, up to 12 m (40 ft) range. Monitors level, volume, and volume flow (model dependent) in liquids, slurries, and solids. With easy to use quick start wizards. ↗ Click on the Article No. for the online configuration in the PIA Life Cycle Portal.	**7ML51-**
	1 ■ - ■ ■ ■ 0 ■ - 4 ■ ■ ■
Communications	
HART (4 ... 20 mA) level, volume, volume flow[5]	**0**
4 ... 20 mA level[6]	**7**
Ingress protection	
IP66, IP68, Type 4X, 6	**1**
Measurement range/wetted parts	
200 ... 3 000 mm (7.87 ... 118.11 inch), PVDF Copolymer	**B**
200 ... 3 000 mm (7.87 ... 118.11 inch), ETFE	**C**
200 ... 6 000 mm (7.87 ... 236.22 inch), PVDF Copolymer	**D**
200 … 6 000 mm (7.87 ... 236.22 inch), ETFE	**E**
200 … 12 000 mm (7.87 ... 472.44 inch), PVDF Copolymer	**G**
200 … 12 000 mm (7.87 ... 472.44 inch), ETFE	**H**
Process connection	
2" NPT [(Taper), ASME B1.20.1]	**D**
R 2" [(BSPT), EN 10226]	**E**
G 2" [(BSPP), EN ISO 228-1]	**F**
Non-wetted parts	
Plastic (PBT/PC material)	**7**
Type of protection	
Non-Ex (ordinary locations) $_{c}CSA_{US}$, CE, KC, RCM, EAC	**A**
Non-Ex (ordinary locations) $_{C}CSA_{US}$, FM, CE, KC, RCM, EAC[1]	**B**
Ex i (ia) (Ex-Zone 0/Div. 1)/IS, FM NI (Class I, Div. 2)[2]	**C**
Electrical connections/cable entries	
2 x M20 x 1.5 (one general purpose Polyamide cable gland and one Polyamide blocking plug provided)	**F**
1 x 1/2" NPT (no gland cable provided)	**K**
For custom electrical connections/cable entries, contact a local sales person. For more information please visit: http://www.automation.siemens.com/aspa_app	
Local HMI	
Without display (blind lid of PBT/PC material)	**0**
With display (blind lid of PBT/PC material)	**1**
With display (clear lid of PC material)	**3**

	Order code
Further designs	
Please add "**-Z**" to Article No. and specify Order code(s).	
Stainless steel tag [13 x 45 mm (0.5 x 1.75 inch)]: Measuring-point number/identification (max. 32 characters) specify in plain text	**Y15**
Certificates	
Test certificate: Manufacturer's test certificate M to DIN 55350, Part 18 and ISO 9000	**C11**
Certificate EN 10204-2.2	**C14**
Approvals[3]	
ATEX, SABS, IECEx - 1G, EAC Ex, Ex ia IIC T4 Ga	**E31**
FM non-incendive - Class I, Div. 2, Groups A, B, C, D T5 (Ta = 80 °C), T6 (Ta = 40 °C)[1]	**E32**
NEPSI, KCs, IECEx - Ex ia IIC T4 Ga	**E33**
$_{C}CSA_{US}$, KCs, FM - Class I, II, III, Div. 1, Groups A, B, C, D, E, F, G, T4, INMETRO, IECEx - Ex ia IIC T4 Ga[1]	**E34**
Marine approvals[4]	
DNV-GL Det Norske Veritas/Germanischer Lloyd	**E50**
LR Lloyds Register	**E51**
BV Bureau Veritas	**E52**
ABS American Bureau of Shipping	**E53**
China Classification Society (CCS)	**E58**
For customs, contact a local sales person. For more information please visit http://www.automation.siemens.com/aspa_app.	
Operating Instructions	
All literature is available to download for free, in a range of languages, at http://www.siemens.com/processinstrumentation/documentation	
Accessories	Article No.
Tag, stainless steel, 12 x 45 mm, one text line (max. 16 characters)	**7ML1930-1AC**
Stainless steel FMS200 universal box bracket mounting kit	**7ML1830-1BK**
3" ASME/DIN Universal mounting adapter, 2" NPT, ETFE	**7ML1830-1BT**
3" ASME/DIN Universal mounting adapter, 2" BSP, ETFE	**7ML1830-1BU**
2" NPT nylon plastic locknut	**7ML1830-1DT**
2" BSP nylon plastic locknut	**7ML1830-1DQ**
Cable Gland Polyamide - General Purpose (-20 ... +60 °C)	**A5E34457564**
Spare Parts	
Spare lid, clear	**A5E44267491**
Spare lid, blind	**A5E44267497**
Spare o-ring for lid	**A5E44267501**
Spare segmented display and 4-button HMI	**A5E44809382**

1) Available only with Electrical connections/cable entries option K only.
2) Available only with order codes E31, E32, E33, and E34.
3) Order codes E31, E32, E33, E34 only available with Type of protection option C.
4) Order codes E50, E51, E54, E53, E58 only available with Communications option 0.
5) Available only with Measurement range/wetted parts options D, E, G, and H.
6) Available only with Measurement range/wetted parts options B and C.

© Siemens 2020

Options

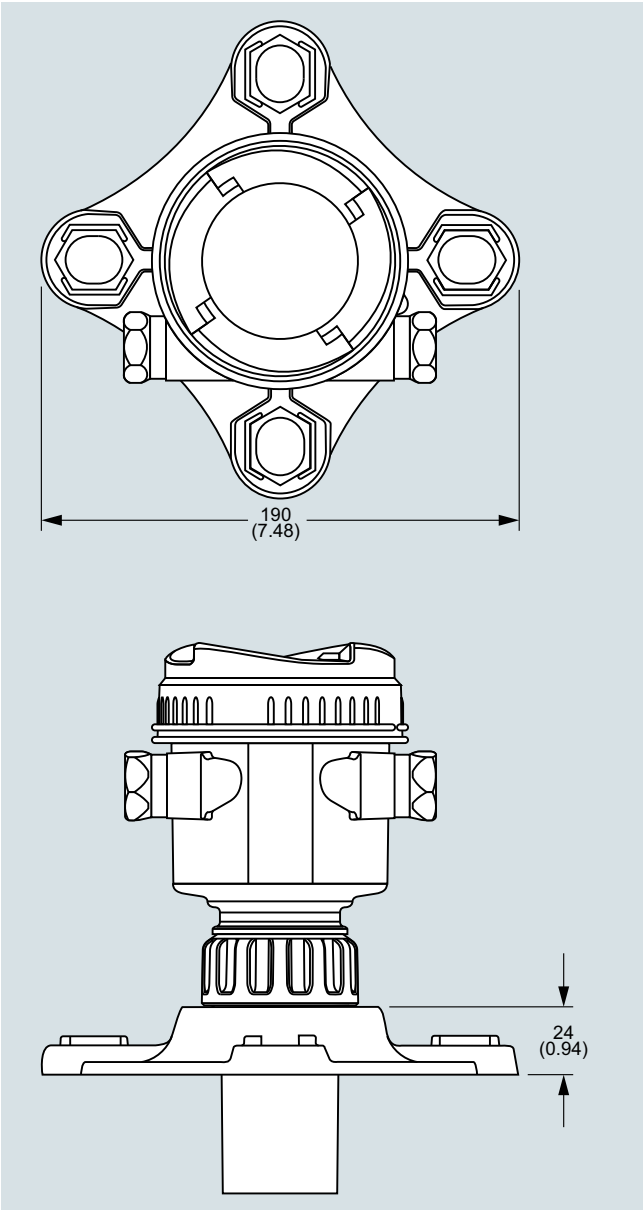

SITRANS Probe LU240 optional flange adapter, dimensions in mm (inch)

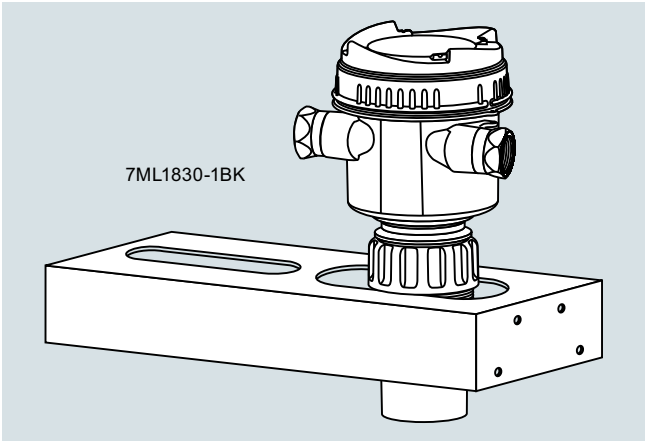

SITRANS Probe LU240 with optional FMS 200 universal box bracket

© Siemens 2020

Dimensional drawings

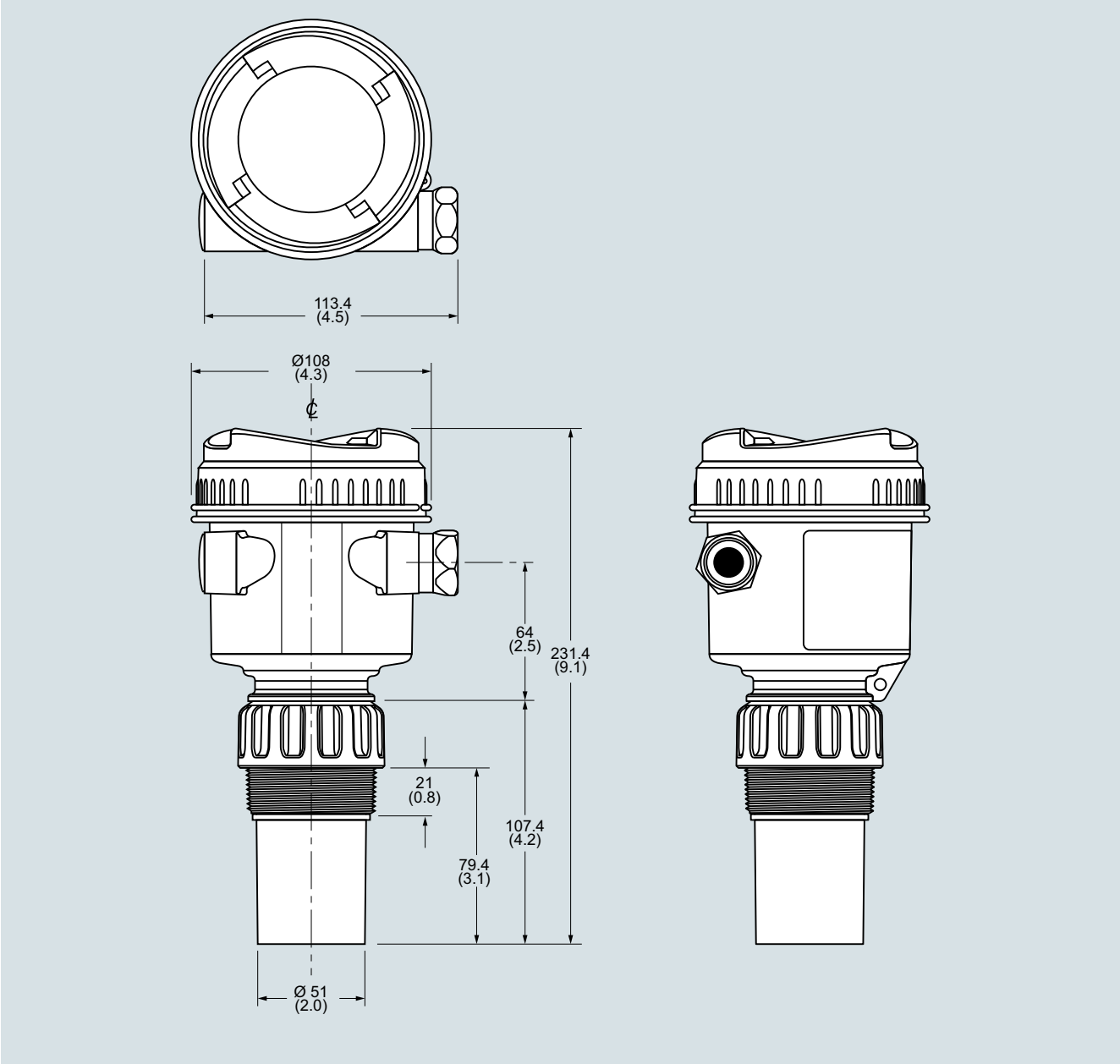

SITRANS Probe LU240, dimensions in mm (inch)

© Siemens 2020

Circuit diagrams

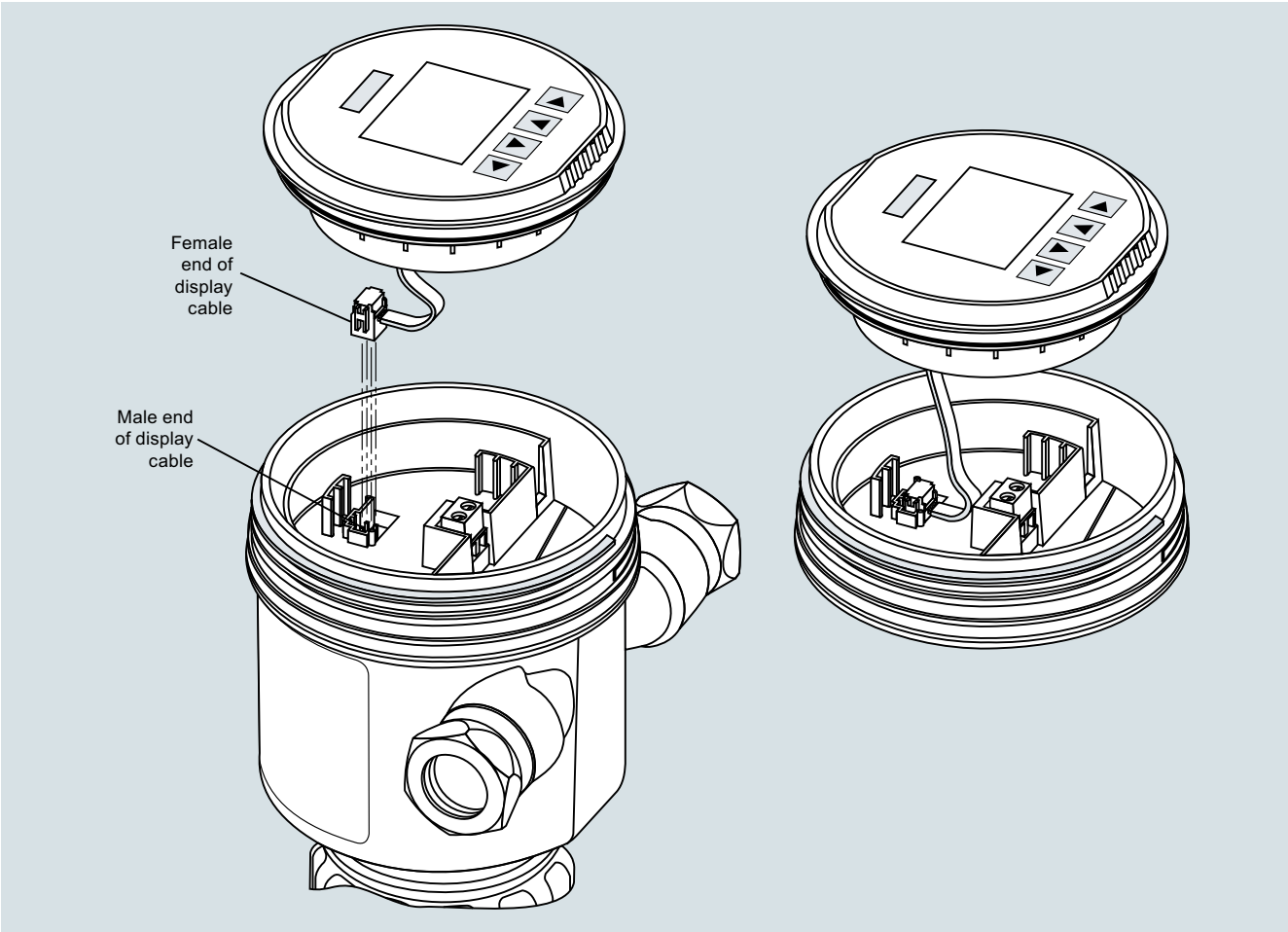

SITRANS Probe LU240 connections

© Siemens 2020

Overview

The Probe is a short-range integrated ultrasonic level transmitter, ideal for liquids and slurries in open or closed vessels.

Benefits

- Easy to install, program, and maintain
- Accurate and reliable
- Sanitary models available
- Sonic Intelligence echo processing
- Integral temperature compensation

Application

The transducer is available in PVDF copolymer, making the device suitable for use in a wide variety of applications. The Probe is easy to install and maintain, and can be quickly removed for cleaning as required by the food, beverage and pharmaceutical industries.

The reliability of the level data is based on the Sonic Intelligence echo processing algorithms. A filter discriminates between the true echo and false echoes from acoustic or electrical noises and agitator blades in motion. The ultrasonic pulse propagation time to the material and back is temperature-compensated and converted into distance for display, analog output and relay actuation.

- Key Applications: chemical storage vessels, filter beds, mud pits, liquid storage vessels, food applications

Configuration

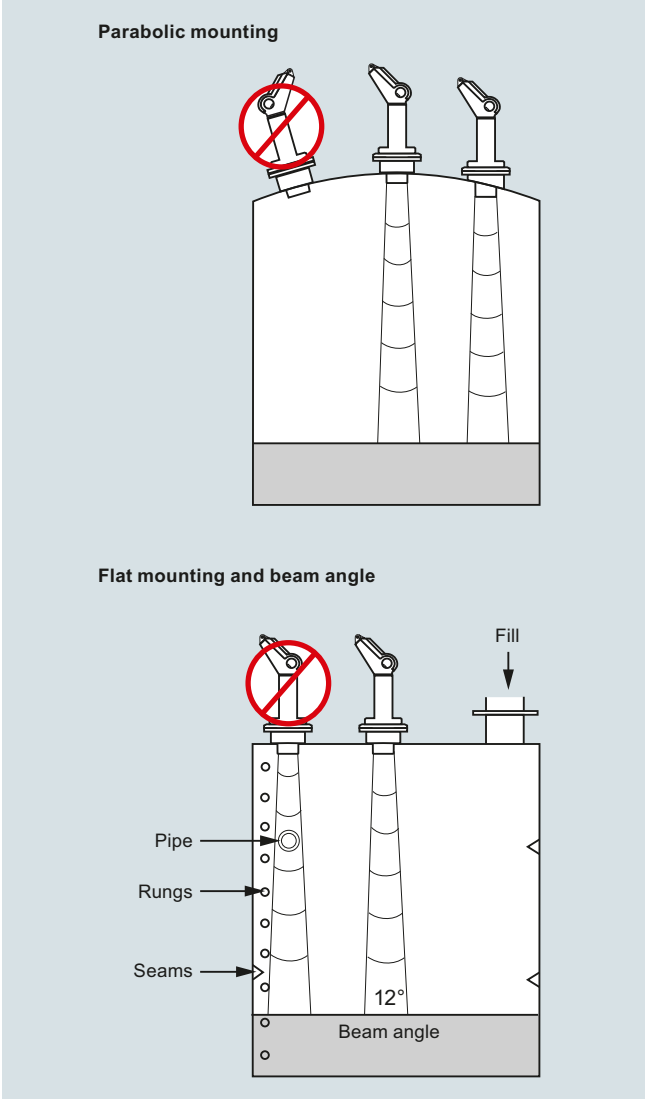

The Probe mounting

© Siemens 2020

Technical specifications

	3-wire version
Mode of operation	
Measuring principle	Ultrasonic level measurement
Input	
Measuring range	0.25 ... 5 m (0.8 ... 16.4 ft)
Frequency	54 kHz
Output	
mA	4 ... 20 mA
• Span	Proportional/ inversely proportional
• Max. load	750 Ω at 24 V DC
Relay	For level alarm or fault
Power supply	
Supply voltage	18 ... 30 V DC, max. 0.2 A
Max. power consumption	5 W (200 mA at 24 V DC)
Certificates and approvals	CE, RCM, $CSA_{US/C}$, FM
Accuracy	
Error in measurement	0.25 % of measuring range (in air)
Resolution	3 mm (0.125 inch)
Temperature compensation	Built in
Echo processing	Sonic Intelligence
Rated operation conditions	
Beam angle	12°
Ambient temperature	
• Standard	-40 ... +60 °C (-40 ... +140 °F)
• Metallic mounting	-20 ... +60 °C (-4 ... +140 °F)
Storage temperature	
• Standard	-40 ... +60 °C (-40 ... +140 °F)
• Metallic mounting	-20 ... +60 °C (-4 ... +140 °F)
Max. static operating pressure	Normal atmospheric pressure
Degree of protection	IP65
Design	
Weight	
• Without flange adapter	1.5 kg (3.3 lb)
• With flange adapter	1.7 kg (3.7 lb)
Material	
• Electronics enclosure	PVC
• Transducer	PVDF copolymer
Degree of protection	IP65
Process connection	• 2" NPT [(Taper), ANSI/ASME B1.20.1] • R 2" [(BSPT), EN 10226] • G 2" [(BSPP), EN ISO 228-1] • 4" sanitary
Flange adapter	3" Universal (fits DN 65, PN 10 and 3" ASME)
Cable inlet	2 inlets for PG 16 or ½" NPT cable glands

Selection and ordering data

	Article No.
The Probe Ultrasonic level transmitter ↗	**7ML1201-** ■ ■ ■ **0 0**
Continuous, non-contact, 5 m (16.4 ft) range. Monitors level for liquids and slurries. With 3-wire relay output.	
↗ Click on the Article No. for the online configuration in the PIA Life Cycle Portal.	
Measuring range	
5 m (16.40 ft)	**1**
Transducer/Process connection	
PVDF copolymer, 2" NPT [(Taper), ANSI/ASME B1.20.1]	**E**
PVDF copolymer, R 2" [(BSPT), EN 10226]	**F**
PVDF copolymer, G 2" [(BSPP), EN ISO 228-1]	**G**
PVDF copolymer, 4" Sanitary mounting	**J**
Model/Approval	
3-wire, 24 V DC, CE, RCM, CSA, FM	**E**
Further designs	Order code
Please add "**-Z**" to Article No. and specify Order code(s).	
Acrylic coated, stainless steel tag [13 x 45 mm (0.5 x 1.75 inch)]: Measuring-point number/identification (max. 20 characters) specify in plain text	**Y17**
Operating Instructions	
All literature is available to download for free, in a range of languages, at	
http://www.siemens.com/processinstrumentation/documentation	
Accessories	Article No.
Universal Box Bracket Mounting kit	**7ML1830-1BK**
Sanitary 4" mounting clamp	**7ML1830-1BR**
3" ASME, DN 65 PN 10, JIS 10K 3B ETFE Flange adapter for 2" NPT	**7ML1830-1BT**
3" ASME, DN 65 PN 10, JIS 10K 3B ETFE Flange adapter for 2" BSPT	**7ML1830-1BU**
2" NPT nylon plastic locknut	**7ML1830-1DT**
2" BSP nylon plastic locknut	**7ML1830-1DQ**
Plastic M20 cable gland with metal locknut	**7ML1930-1DB**
SITRANS RD100, loop powered display - see Chapter 7	**7ML5741-.....-.**
SITRANS RD150, remote digital display for 4 ... 20 mA and HART devices - see Chapter 7	**7ML5742-.....-....**
SITRANS RD200, universal input display with Modbus conversion - see Chapter 7	**7ML5740-.....-..**
SITRANS RD300, dual line display with totalizer and linearization curve and Modbus conversion - see Chapter 7	**7ML5744-.....-..**
For applicable back up point level switch see point level measurement section.	

© Siemens 2020

Options

Flange adapter for mating 2" NPT or 2" BSP process connections to 3" ANSI, DN 65 PN10, and JIS 10K 3B flanges

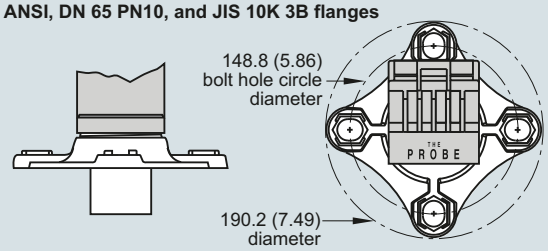

The Probe optional flange adapter, dimensions in mm (inch)

The Probe with FMS 200 mounting bracket

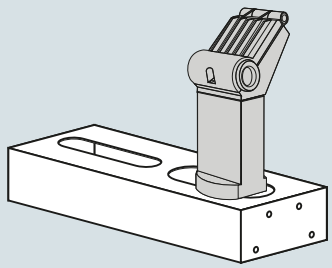

The Probe with optional mounting bracket

Circuit diagrams

3 wire model
(standard and sanitary models)

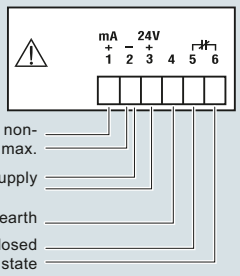

Display

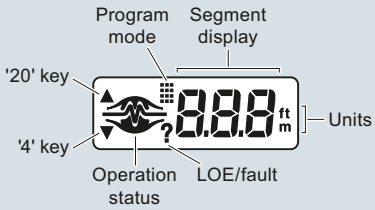

The Probe connections

Dimensional drawings

Standard model

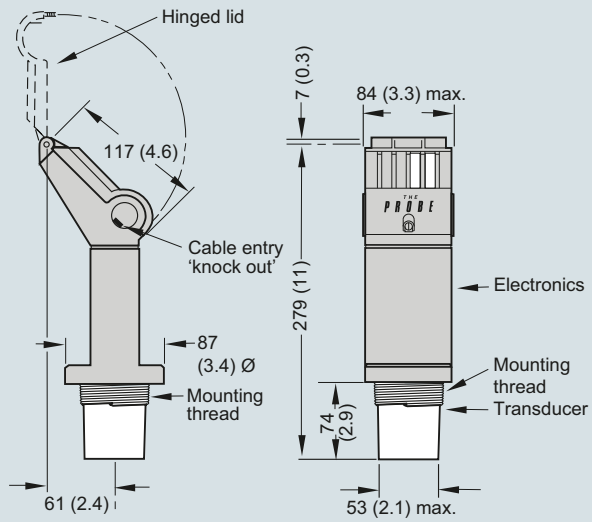

Sanitary model

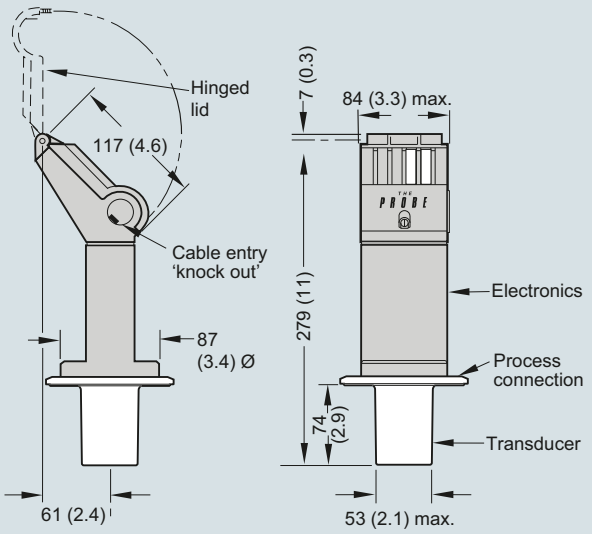

The Probe, dimensions in mm (inch)

4

© Siemens 2020

Overview

Ultrasonic Transducers

Ultrasonic measuring systems are the cost-effective choice for monitoring and control in short- to long-range applications for liquids, slurries, and solids in a wide range of industries. Transducers are impervious to dust, moisture, corrosion, vibration, flooding, and extreme temperature. They are easy to install and virtually maintenance-free. Choose from a wide selection of models designed for short or long range applications on liquids or solids.

Technical specifications

EchoMax Transducers					
	Liquids		**Liquids and Solids**		
			Standard		
	XRS-5	**ST-H**	**XPS-10**	**XPS-15**	**XPS-30**
Max. range[1)]	8 m (26 ft)	10 m (33 ft)	10 m (33 ft)	15 m (50 ft)	30 m (100 ft)
Min. range	0.3 m (1 ft)	0.3 m (1 ft)	0.3 m (1 ft)	0.3 m (1 ft)	0.6 m (2 ft)
Max. temperature	65 °C (149 °F)	73 °C (164 °F)	95 °C (203 °F)	95 °C (203 °F)	95 °C (203 °F)
Min. temperature	-20 °C (-4 °F)	-40 °C (-40 °F)	-40 °C (-40 °F)	-40 °C (-40 °F)	-40 °C (-40 °F)
Typical Applications	Wet wells and open channels	Chemical storage and liquid tanks	Dusty solids and slurries	Deep wet wells and solids	Powders, pellets and solids
Frequency	44 kHz	44 kHz	44 kHz	44 kHz	30 kHz
Beam angle (-3dB)	10°	12°	12°	6°	6°
Thread size	R 1" [(BSPT), EN 10226] 1" NPT	1" and 2" NPT R 2" [(BSPT), EN 10226] 2" [(BSPP), EN ISO 228-1]	R 1" [(BSPT), EN 10226] 1" NPT	R 1" [(BSPT), EN 10226] 1" NPT	R 1.5" [(BSPT), EN 10226] Universal thread 1.5" NPT
Enclosure	• PVDF Copolymer • CSM • Option: Flange with PTFE facing	• ETFE • Option: PVDF	• PVDF • Option: foam facing • Flange with PTFE facing	• PVDF • Option: foam facing • Flange with PTFE facing	• PVDF • Option: foam facing • Flange with PTFE facing
Compatible with:					
SITRANS LUT400	•	•	•	•	•
HydroRanger 200	•	•	•	•	
MultiRanger 100/200	•	•	•	•	

1) Max range is rated for measurement of liquids, recommended range for solids is 50 % of maximum. Application conditions such as extreme dust or angle of repose may reduce the usable maximum range. Consult a local sales person for more details.

© Siemens 2020

Overview

ST-H transducers use ultrasonic technology to measure level in chemical storage and liquid tanks.

Benefits

- Can be mounted on a narrow standpipe
- Immune to corrosive and harsh environments
- Integral temperature sensor

Application

The narrow design of the ST-H allows the transducer to be mounted on a narrow standpipe. When mounted correctly, it is completely protected from the process and can even be used in harsh, corrosive environments.

During operation, the ultrasonic transducer emits acoustic pulses in a narrow beam perpendicular to the transducer face. The level transceiver measures the propagation time between pulse emission and reception of the echo to calculate the distance from the transducer to the material. Variations in sound velocity due to changes in temperature within the permissible range are automatically compensated by the integral temperature sensor.

- Key Applications: chemical storage, liquid tanks

Technical specifications

Mode of operation	
Measuring principle	Ultrasonic transducer
Input	
Measuring range	0.3 ... 10 m (1 ... 33 ft)
Output	
Frequency	44 kHz
Beam angle	12°
Accuracy	
Temperature compensation	Compensated by integral temperature sensor
Rated operating conditions	
Pressure	Normal atmospheric pressure
Ambient conditions	
Ambient temperature	-20 ... +60 °C (-5 ... +140 °F) (ATEX approved model) -40 ... +73 °C (-40 ... +163 °F) (CSA/FM approved model)
Storage temperature	-20 ... +60 °C (-5 ... +140 °F)
Design	
Weight[1)]	1.4 kg (3 lb)
Material (enclosure)	Base and lid made of ETFE or PVDF (epoxy fitted joint)[2)]
Process connection	2" NPT [(Taper), ANSI/ASME B1.20.1], R 2" [(BSPT), EN 10226] or G 2" [(BSPP), EN ISO 228-1]
Degree of protection	IP68
Cable connection	2-core shielded/twisted, 0.519 mm^2 (20 AWG), PVC sheath
Cable (max. length)	365 m (1 200 ft) with RG 62 A/U coaxial cable
Options	
Flange adapter	3" Universal (fits DN 65, PN 10 and 3" ASME)
Certificates and approvals	CE, CSA Class I, II, III, Div. 1, Groups A, B, C, D, E, F, G T3 (ETFE only), FM Class I, II, Div. 1, Groups C, D, E, F, G T4A, ATEX II 2G / INMETRO Ex mb IIC T5 Gb, RCM, KCC

1) Approximate shipping weight of transducer with standard cable length

2) When measuring chemicals, check compatibility of ETFE or PVDF and epoxy, or mount joint external to process.

© Siemens 2020

Selection and ordering data

	Article No.
ST-H Ultrasonic level transducer ↗	**7ML1100-**
Continuous, non-contact, 0.3 m (1 ft) range, for liquids.	■ ■ **A** ■ **0**
↗ Click on the Article No. for the online configuration in the PIA Life Cycle Portal.	
Process connection	
ETFE, 2" NPT [(Taper), ANSI/ASME B1.20.1]	**0**
ETFE, R 2" [(BSPT), EN 10226]	**1**
ETFE, G 2" [(BSPP), EN ISO 228-1]	**2**
PVDF copolymer, 2" NPT [(Taper), ANSI/ASME B1.20.1]	**3**
PVDF copolymer, R 2" [(BSPT), EN 10226]	**4**
PVDF copolymer, G 2" [(BSPP), EN ISO 228-1]	**5**
Cable length	
5 m (16.40 ft)	**A**
10 m (32.81 ft)	**B**
30 m (98.43 ft)	**C**
50 m (164.04 ft)	**D**
100 m (328.08 ft)	**E**
Approvals	
CE, FM Class I, II, Div. 1, Groups C ,D ,E ,F ,G T4A[3]	**2**
ATEX 2G/INMETRO Ex mb IIC T5 Gb, RCM, KCC CSA Class I, II, III, Div. 1, Groups A, B, C, D, E, F, G T3[1]	**3**
CE, ATEX 2G/INMETRO Ex mb IIC T5 Gb, RCM, KCC[2]	**4**

[1] Available with Process connection options 0 ... 2 only.
[2] Available with Process connection options 3 ... 5 only.
[3] Not suitable for Ketone, Hexane, Ester or Ethyl Acetate atmospheres.

	Order code
Further designs	
Please add "**-Z**" to Article No. and specify Order code(s).	
Acrylic coated, stainless steel tag [13 x 45 mm (0.5 x 1.75 inch)]: Measuring-point number/identification (max. 16 characters) specify in plain text	**Y17**
Accessories	Article No.
Universal box bracket, mounting kit	**7ML1830-1BK**
3" ASME, DN 65 PN 10, JIS 10K 3B ETFE flange adapter for 2" NPT	**7ML1830-1BT**
3" ASME, DN 65 PN 10, JIS 10K 3B ETFE flange adapter for 2" BSPT	**7ML1830-1BU**
Easy Aimer 2, aluminum, NPT with ¾" x 1" PVC coupling	**7ML1830-1AQ**
Easy Aimer 2, aluminum with M20 adapter and 1" and 1½" BSPT aluminum couplings	**7ML1830-1AX**
Easy Aimer 304, NPT with 1" stainless steel coupling	**7ML1830-1AU**
Easy Aimer 304, with M20 adapter and 1" and 1½" BSPT 304 stainless steel couplings	**7ML1830-1GN**
Plastic adapter 1" NPT	**7ML1930-1FX**
Plastic adapter 1" NPT/M20	**7ML1830-1EF**
Operating Instructions	
All literature is available to download for free, in a range of languages, at	

http://www.siemens.com/processinstrumentation/documentation

© Siemens 2020

Dimensional drawings

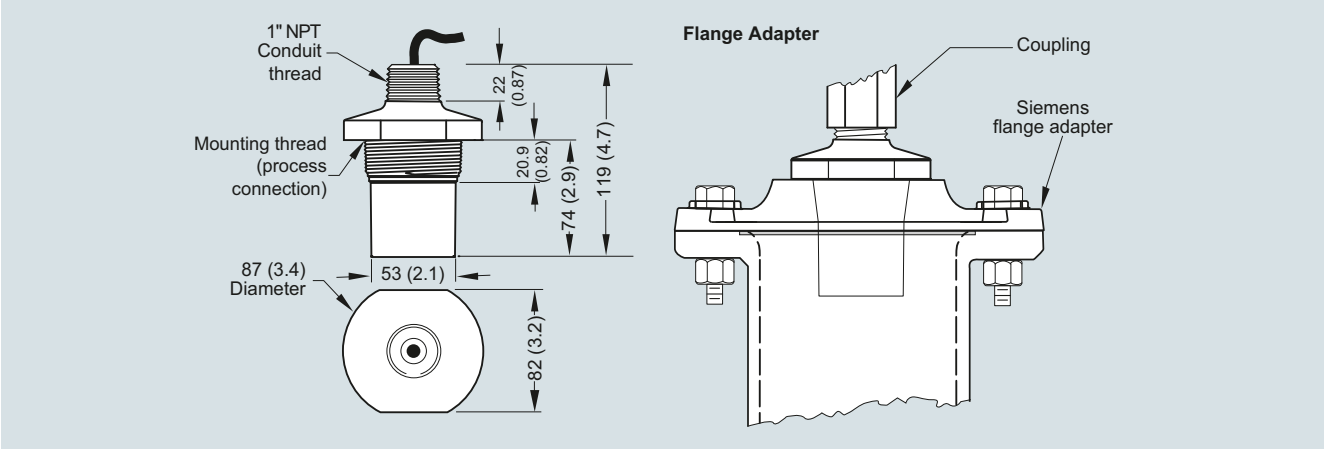

ST-H ultrasonic transducer, dimensions in mm (inch)

Circuit diagrams

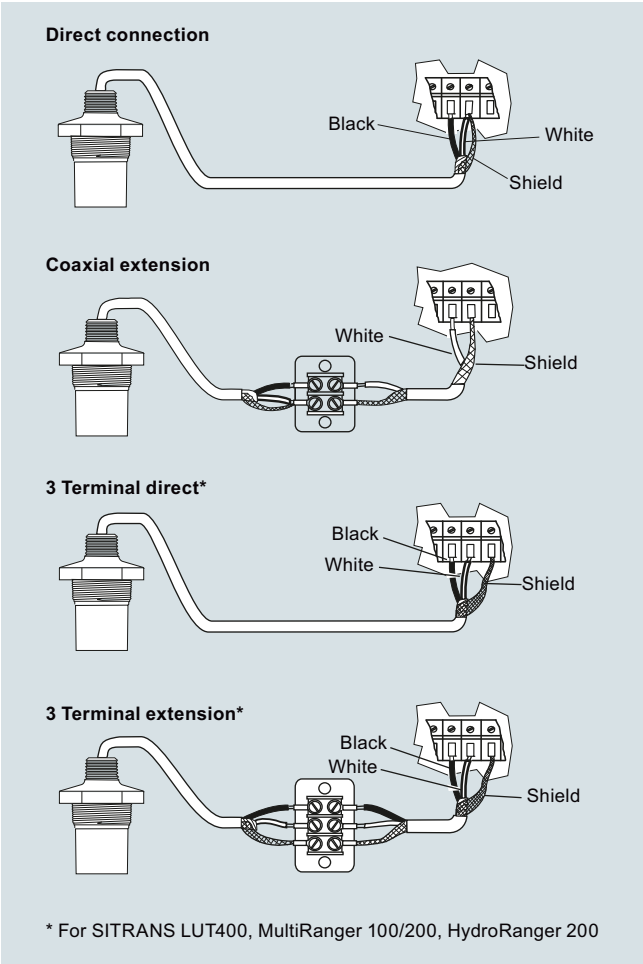

ST-H ultrasonic transducer connections

© Siemens 2020

Overview

EchoMax XRS-5 ultrasonic transducer provides reliable, continuous level monitoring of liquids and slurries in narrow lift stations/wet wells, flumes, weirs and filter beds using a beam angle of just 10° and a CSM rubber face.

Benefits

- Narrow beam angle of only 10°
- Chemically resistant PVDF copolymer enclosure and CSM rubber face
- Measuring range: 8 m (26 ft) for measurement of liquids and slurries
- Fully submersible: IP68 degree of protection
- Easy installation with 1" NPT or R 1" BSPT connection

Application

The XRS-5 is non-contacting with a measuring range from 0.3 to 8 m (1 to 26 ft). Advanced echo processing ensures reliable data even in conditions with obstructions, turbulence, and foam.

The hermetically sealed CSM rubber face and the PVDF copolymer enclosure are designed for maximum resistance to methane, salt water, caustics, and harsh chemicals common to wastewater installations. With an IP68 degree of protection, this rugged sensor is fully submersible in the event of flood conditions. Use a submergence shield if full submergence is possible in the application. A submergence shield will maintain a high level reading output during submerged conditions.

The low-cost XRS-5 transducer is compatible with a full range of Siemens controllers, from a basic system for high/low alarm or simple pump control, up to advanced control systems with communications, telemetry and SCADA integration capabilities.

- Key Applications: wet wells, flumes, weirs, filter beds

Technical specifications

Mode of operation	
Measuring principle	Ultrasonic transducer
Input	
Measuring range	0.3 ... 8 m (1 ... 26 ft), dependent on application
Output	
Frequency	44 kHz
Beam angle	10°
Accuracy	
Temperature error	Compensated by integral temperature sensor
Rated operating conditions	
Vessel pressure	Normal atmospheric pressure
Ambient Conditions	
• Ambient temperature	-20 ... +65 °C (-4 ... +149 °F)
• Storage temperature	-20 ... +65 °C (-4 ... +149 °F)
Design	
Weight (approximate shipping weight of sensor with standard cable length)	1.2 kg (2.6 lb)
Material (enclosure)	PVDF copolymer enclosure and CSM face
Process connection	1" NPT [(Taper), ANSI/ASME B1.20.1] or R 1" [(BSPT), EN 10226]
Degree of protection	IP65/IP68
Cable connection	2-core shielded/twisted, 0.5 mm^2 (20 AWG), PVC sheath
Cable (max. length)	• 365 m (1 200 ft) with RG 62 A/U coaxial cable • 365 m (1 200 ft) with 2-core twisted pair, foil shield, 0.5 mm^2 (20 AWG), PVC sheath, only for MultiRanger 100/200
Options	
Flange version	Factory flange with PTFE face for ASME, EN or JIS configuration
Submergence shield	For applications with flooding possible
Certificates and approvals	CE, RCM, KCC CSA Class I, Div. 2, Groups A, B, C, D, Class II, Div. 1 Groups E, F, G FM Class I, Zone 1, AEx m IIC, T6 Class II, III, Div. 1, Groups E, F, G T6 ATEX II 2GD / IECEx / INMETRO Ex mb IIC T6 Gb, Ex tb IIIC T85 °C Db

© Siemens 2020

Selection and ordering data

	Article No.
EchoMax XRS-5 Ultrasonic level transducer ↗	**7ML1106-**
Continuous, non-contact, 8 m (26 ft) range, for liquids and slurries.	■ ■ ■ ■ **0** **-** **0** ■
↗ Click on the Article No. for the online configuration in the PIA Life Cycle Portal.	
Process connection	
1" NPT [(Taper), ANSI/ASME B1.20.1]	**1**
R 1" [(BSPT), EN 10226]	**2**
Cable length	
5 m (16.40 ft)	**A**
10 m (32.81 ft)	**B**
30 m (98.43 ft)	**C**
Facing	
Standard (CSM rubber)	**A**
PTFE (flange versions)	**B**
Approvals	
CE, RCM, KCC, CSA Class I, Div. 2, Groups A, B, C, D, Class II, Div. 1, Groups E, F, G FM Class I, Zone 1, AEx m IIC, T6 Class II, III, Div. 1, Groups E, F, G T6 ATEX II 2GD/IECEx/ INMETRO Ex mb IIC T6 Gb, Ex tb IIIC T85 °C Db	**2**
Mounting flange (flush mount)	
None	**A**
3" ASME, 150 lb, flat faced	**B**
4" ASME, 150 lb, flat faced	**C**
6" ASME, 150 lb, flat faced	**D**
DN 80, PN 10/16, Type A, flat faced	**J**
DN 100, PN 10/16, Type A, flat faced	**K**
DN 150, PN 10/16, Type A, flat faced	**L**
JIS10K 3B style	**Q**
JIS10K 4B style	**R**
JIS10K 6B style	**S**
Note: flange bolting patterns and facings dimensionally correspond to the applicable ASME B16.5 or EN 1092-1, or JIS B 2220 standard.	

	Order code
Further designs	
Please add "**-Z**" to Article No. and specify Order code(s).	
Acrylic coated, stainless steel tag [13 x 45 mm (0.5 x 1.75 inch)]: Measuring-point number/identification (max. 16 characters) specify in plain text	**Y17**
Accessories	Article No.
Tag, stainless steel with hole, 12 x 45 mm (0.47 x 1.77 inch), one text line for fastening on sensors	**7ML1930-1BJ**
Submergence shield kit	**7ML1830-1BH**
Easy Aimer 2, aluminum, NPT with ¾" x 1" PVC coupling	**7ML1830-1AQ**
Easy Aimer 2, aluminum with M20 adapter and 1" and 1½" BSPT aluminum couplings	**7ML1830-1AX**
Easy Aimer 304, NPT with 1" stainless steel coupling	**7ML1830-1AU**
Easy Aimer 304, with M20 adapter and 1" and 1½" BSPT 304 stainless steel couplings	**7ML1830-1GN**
FMS-200 universal box bracket, mounting kit	**7ML1830-1BK**
FMS-210 channel bracket, wall mount	**7ML1830-1BL**
FMS-220 extended channel bracket, wall mount	**7ML1830-1BM**
FMS-310 channel bracket, floor mount	**7ML1830-1BN**
FMS-320 extended channel bracket, floor mount	**7ML1830-1BP**
FMS-350 bridge channel bracket, floor mount (see Mounting Brackets on page 4/186 for more information)	**7ML1830-1BQ**
1" NPT locknut, plastic	**7ML1830-1DS**
1" BSP locknut, plastic	**7ML1830-1DR**
1" BSP locknut, flanged, plastic	**7ML1830-1DN**
Plastic adapter 1" BSP - 20 mm	**7ML1830-1EA**
Plastic adapter 1" NPT	**7ML1930-1FX**
Plastic adapter 1" NPT/M20	**7ML1830-1EF**
Operating Instructions	
All literature is available to download for free, in a range of languages, at	

http://www.siemens.com/processinstrumentation/documentation

© Siemens 2020

Selection and ordering data

	Article No.
EchoMax XRS-5C Ultrasonic level transducer ↗	**7ML1105-**
Continuous, non-contact, 8 m (26 ft) range, for liquids and slurries.	■ ■ ■ ■ **1** - **0** ■
↗ Click on the Article No. for the online configuration in the PIA Life Cycle Portal.	
Process connection	
1" NPT [(Taper), ANSI/ASME B1.20.1]	**1**
Cable length	
5 m (16.40 ft)	**A**
10 m (32.81 ft)	**B**
30 m (98.43 ft)	**C**
Facing	
Standard (CSM rubber)	**A**
PTFE (flange versions)	**B**
Approvals	
CSA Class I Div. 1, Groups A, B, C, D; Class II Div. 1, Groups E, F, G; Class III	**1**
Mounting flange (flush mount)	
None	**A**
3" ASME, 150 lb, flat faced	**B**
4" ASME, 150 lb, flat faced	**C**
6" ASME, 150 lb, flat faced	**D**
Note: flange bolting patterns and facings dimensionally correspond to the applicable ASME B16.5 or EN 1092-1, or JIS B 2220 standard.	
Operating Instructions	
All literature is available to download for free, in a range of languages, at	
http://www.siemens.com/processinstrumentation/documentation	

	Order code
Further designs	
Please add "**-Z**" to Article No. and specify Order code(s).	
Acrylic coated, stainless steel tag [13 x 45 mm (0.5 x 1.75 inch)]: Measuring-point number/identification (max. 16 characters) specify in plain text	**Y17**
Accessories	Article No.
Submergence shield kit	**7ML1830-1BH**
Easy Aimer 2, aluminum, NPT with ¾" x 1" PVC coupling	**7ML1830-1AQ**
Easy Aimer 304, NPT with 1" stainless steel coupling	**7ML1830-1AU**
FMS-200 universal box bracket, mounting kit	**7ML1830-1BK**
FMS-210 channel bracket, wall mount	**7ML1830-1BL**
FMS-220 extended channel bracket, wall mount	**7ML1830-1BM**
FMS-310 channel bracket, floor mount	**7ML1830-1BN**
FMS-320 extended channel bracket, floor mount	**7ML1830-1BP**
FMS-350 bridge channel bracket, floor mount (see Mounting Brackets on page 4/186 for more information)	**7ML1830-1BQ**

© Siemens 2020

Dimensional drawings

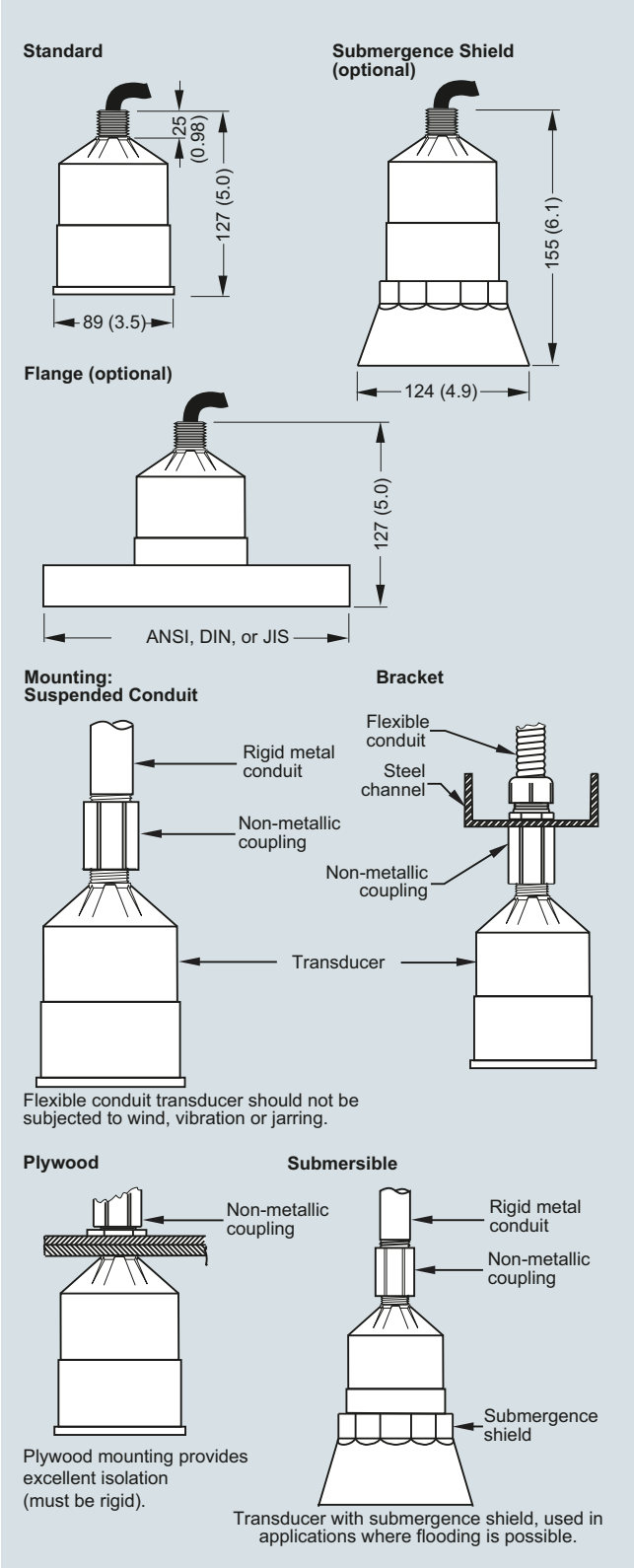

XRS-5 ultrasonic transducer, dimensions in mm (inch)

Circuit diagrams

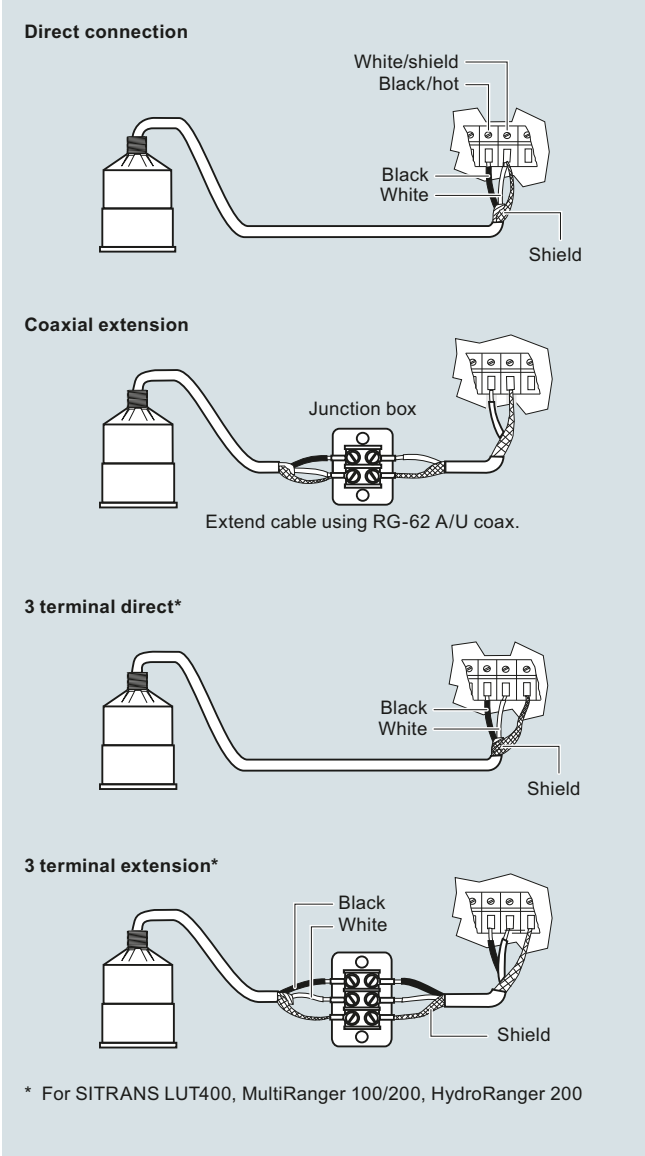

XRS-5 ultrasonic transducer connections

© Siemens 2020

EchoMax XPS

Overview

EchoMax XPS transducers use ultrasonic technology to measure level in a wide range of liquids and solids.

Benefits

- Integral temperature compensation
- Low ringing effect reduces blanking distance
- Optional foam facing for dusty applications
- Self-cleaning and low-maintenance
- Chemically resistant
- Hermetically sealed

Application

XPS transducers can be fully immersed, are resistant to steam and corrosive chemicals, and can be installed without flanges.

The XPS series offers versions for various measuring ranges up to 30 m (100 ft) and up to a max. temperature of 95 °C (203 °F).

During operation, the EchoMax transducers emit acoustic pulses in a narrow beam. The level monitor measures the propagation time between pulse emission and its reflection (echo) to calculate the distance.

© Siemens 2020

Technical specifications

Input	XPS-10	XPS-15 (standard and F models)	XPS-30
Measuring range[1)]	0.3 ... 10 m (1 ... 33 ft)	Standard: 0.3 ... 15 m (1 ... 50 ft) XPS-15F: 0.45 ... 15 m (1.5 ... 50 ft)	0.6 ... 30 m (2 ... 100 ft)
Output			
Frequency	44 kHz	44 kHz	30 kHz
Beam angle	12°	6°	6°
Environmental			
Location	Indoors/outdoors		
Ambient temperature	-40 ... +95 °C (-40 ... +203 °F)	Standard: -40 ... +95 °C (-40 ... +203 °F) XPS-15F: -20 ... +95 °C (-4 ... +203 °F)	-40 ... +95 °C (-40 ... +203 °F)
Storage temperature	-40 ... +95 °C (-40 ... +203 °F)	Standard: -40 ... +95 °C (-40 ... +203 °F) XPS-15F: -20 ... +95 °C (-4 ... +203 °F)	-40 ... +95 °C (-40 ... +203 °F)
Pollution degree	4		
Pressure	8 bar g (120 psi g) Flanged: 0.5 bar g (7.25 psi g)	8 bar g (120 psi g) Flanged: 0.5 bar g (7.25 psi g)	0.5 bar g (7.25 psi g) Flanged: 0.5 bar g (7.25 psi g)
Design			
Weight	0.8 kg (1.8 lb)	1.3 kg (2.8 lb) Flanged: 2 kg (4.4 lb)	4.3 kg (9.5 lb)
Power supply	Operation of transducer only with approved Siemens controllers		
Material	Standard: PVDF Flanged: PVDF with CPVC flange Option: PTFE face with CPVC flange	Standard: PVDF Flanged: PVDF with CPVC flange Option: PTFE face with CPVC flange	Standard: PVDF Flanged: PVDF with CPVC flange Option: PTFE face with CPVC flange
Color	Blue	Standard: Blue XPS-15F: Gray	Blue
Process connection	1" NPT or 1" BSPT	Standard: 1" NPT or 1" BSPT XPS-15F: 1" NPT	1.5" universal thread (NPT or BSPT)
Degree of protection	IP66/68	IP66/68	IP66/68
Cable	2-wire twisted pair/braided and foil shielded 0.5 mm^2 (20 AWG) PVC jacket		
Separation	Max. 365 m (1 200 ft)		
Certificates and approvals	Standard: CE, CSA, FM, ATEX, IECEx	Standard: CE, CSA, FM, ATEX, IECEx XPS-15F: FM Class I, Div. 1, Groups A, B, C, and D, Class II Div. 1, Groups E, F, and G, Class III	CE, CSA, FM, ATEX, IECEx

[1)] Max range is rated for measurement of liquids, recommended range for solids is 50 % of maximum. Application conditions such as extreme dust or angle of repose may reduce the usable maximum range. Consult a local sales person for more details.

© Siemens 2020

Selection and ordering data

	Article No.
EchoMax XPS-10 Ultrasonic level transducer ↗	**7ML1115-**
Continuous, non-contact, 10 m (32.80 ft), for liquids and solids.	■ ■ ■ ■ **0**
↗ Click on the Article No. for the online configuration in the PIA Life Cycle Portal.	
Mounting thread and facing	
1" NPT [(Taper), ANSI/ASME B1.20.1]	**0**
1" NPT [(Taper), ANSI/ASME B1.20.1] with foam facing[1)]	**1**
1" NPT [(Taper), ANSI/ASME B1.20.1] with PTFE facing[2)]	**2**
R 1" [(BSPT), EN 10226]	**3**
R 1" [(BSPT), EN 10226] with foam facing[1)]	**4**
R 1" [(BSPT), EN 10226] with PTFE facing[2)]	**5**
Cable length	
5 m (16.40 ft)	**B**
10 m (32.81 ft)	**C**
30 m (98.43 ft)	**E**
50 m (164.04 ft)	**F**
100 m (328.08 ft)	**K**
Mounting flange	
None	**A**
3" ASME, 150 lb, flat faced	**C**
4" ASME, 150 lb, flat faced	**D**
6" ASME, 150 lb, flat faced	**E**
8" ASME, 150 lb, flat faced	**F**
DN 80, PN 10/16, Type A, flat faced	**G**
DN 100, PN 10/16, Type A, flat faced	**J**
DN 150, PN 10/16, Type A, flat faced	**L**
JIS10K3B Style	**M**
JIS10K4B Style	**P**
JIS10K6B Style (Note: Flange bolting patterns and facings dimensionally correspond to the applicable ASME B16.5 or EN 1092-1, or JIS B 2220 standard.)	**R**
Approvals	
ATEX 2GD Ex mb IIC T4 Gb, Ex tb IIIC T135 °C Db; IECEx SIR 13.0009X Ex mb IIC T4 Gb, Ex tb IIIC T135 °C Db; FM Class I, Div. 2, Groups A, B, C, D; Class II, Div. 1, Groups E, F, G; Class III	**3**
CSA Class I, Div. 1, Groups A, B, C, D, Class II, Div. 1, Groups E, F, G, Class III [3)]	**4**

1) Not available with flanged versions.
2) Available with flanged versions only.
3) Valid with mounting thread and facing options 0 ... 2 only.

	Order code
Further designs	
Please add "**-Z**" to Article No. and specify Order code(s).	
Stainless steel tag [69 x 50 mm (2.71 x 1.97 inch)]: Measuring point number/identification (max. 27 characters) specify in plain text	**Y15**
Operating Instructions	
All literature is available to download for free, in a range of languages, at	
http://www.siemens.com/processinstrumentation/documentation	
Accessories	Article No.
Tag, stainless steel with hole, 12 x 45 mm (0.47 x 1.77 inch), one text line for fastening on sensors	**7ML1930-1BJ**
Submergence shield kit	**7ML1830-1BH**
Easy Aimer 2, aluminum, NPT with ¾" x 1" PVC coupling	**7ML1830-1AQ**
Easy Aimer 2, aluminum with M20 adapter and 1" and 1½" BSPT aluminum couplings	**7ML1830-1AX**
Easy Aimer 304, NPT with 1" stainless steel coupling	**7ML1830-1AU**
Easy Aimer 304, with M20 adapter and 1" and 1½" BSPT 304 stainless steel couplings	**7ML1830-1GN**
Universal box bracket, mounting kit	**7ML1830-1BK**
Channel bracket, wall mount	**7ML1830-1BL**
Extended channel bracket, wall mount	**7ML1830-1BM**
Channel bracket, floor mount	**7ML1830-1BN**
Extended channel bracket, floor mount	**7ML1830-1BP**
Bridge channel bracket, floor mount (see Mounting Brackets on page 4/186 for more information)	**7ML1830-1BQ**
1" NPT locknut, plastic	**7ML1830-1DS**
1" BSP locknut, plastic	**7ML1830-1DR**
1" BSP locknut, flanged, plastic	**7ML1830-1DN**
Plastic adapter 1" BSP - 20 mm	**7ML1830-1EA**
Plastic adapter 1" NPT	**7ML1930-1FX**
Plastic adapter 1" NPT/M20	**7ML1830-1EF**

© Siemens 2020

Selection and ordering data

	Article No.
EchoMax XPS-15 Ultrasonic level transducer ↗	**7ML1118-**
Continuous, non-contact, 15 m (49.21 ft), for liquids and solids.	■ ■ ■ ■ **0**
↗ Click on the Article No. for the online configuration in the PIA Life Cycle Portal.	
Mounting thread and facing	
1" NPT [(Taper), ANSI/ASME B1.20.1]	**0**
1" NPT [(Taper), ANSI/ASME B1.20.1] with foam facing[1)]	**1**
1" NPT [(Taper), ANSI/ASME B1.20.1] with PTFE facing[2)]	**2**
R 1" [(BSPT), EN 10226]	**3**
R 1" [(BSPT), EN 10226] with foam facing[1)]	**4**
R 1" [(BSPT), EN 10226] with PTFE facing[2)]	**5**
Cable length	
5 m (16.40 ft)	**B**
10 m (32.81 ft)	**C**
30 m (98.43 ft)	**E**
50 m (164.04 ft)	**F**
100 m (328.08 ft)	**K**
Mounting flange	
None	**A**
6" ASME, 150 lb, flat faced	**D**
8" ASME, 150 lb, flat faced	**E**
DN 150, PN 10/16, Type A, flat faced	**J**
DN 200, PN 10, Type A, flat faced	**K**
JIS10K 6B	**N**
JIS10K 8B	**P**
(Note: Flange bolting patterns and facings dimensionally correspond to the applicable ASME B16.5 or EN 1092-1, or JIS B 2220 standard.)	
Approvals	
ATEX 2GD Ex mb IIC T4 Gb, Ex tb IIIC T135 °C Db; IECEx SIR 13.0009X Ex mb IIC T4 Gb, Ex tb IIIC T135 °C Db; FM Class I, Div. 2, Groups A, B, C, D; Class II, Div. 1, Groups E, F, G; Class III	**3**
CSA Class I, Div. 1, Groups A, B, C, D, Class II, Div. 1, Groups E, F, G, Class III [3)]	**4**

[1)] Not available with flanged versions.

[2)] Available with flanged versions only.

[3)] Available with mounting options 0 ... 2 only.

	Order code
Further designs	
Please add "**-Z**" to Article No. and specify Order code(s).	
Stainless steel tag [69 x 50 mm (2.71 x 1.97 inch)]: Measuring point number/ identification (max. 27 characters) specify in plain text	**Y15**
Operating Instructions	
All literature is available to download for free, in a range of languages, at	
http://www.siemens.com/processinstrumentation/documentation	
Accessories	Article No.
Tag, stainless steel with hole, 12 x 45 mm (0.47 x 1.77 inch), one text line for fastening on sensors	**7ML1930-1BJ**
Submergence shield kit	**7ML1830-1BJ**
Universal box bracket, mounting kit	**7ML1830-1BK**
Channel bracket, wall mount	**7ML1830-1BL**
Extended channel bracket, wall mount	**7ML1830-1BM**
Channel bracket, floor mount	**7ML1830-1BN**
Extended channel bracket, floor mount	**7ML1830-1BP**
Bridge channel bracket, floor mount (see Mounting Brackets on page 4/186 for more information)	**7ML1830-1BQ**
1" NPT locknut, plastic	**7ML1830-1DS**
1" BSP locknut, plastic	**7ML1830-1DR**
1" BSP locknut, flanged, plastic	**7ML1830-1DN**
Easy Aimer 2, aluminum, NPT with ¾" x 1" PVC coupling	**7ML1830-1AQ**
Easy Aimer 2, aluminum with M20 adapter and 1" and 1½" BSPT aluminum couplings	**7ML1830-1AX**
Easy Aimer 304, NPT with 1" stainless steel coupling	**7ML1830-1AU**
Easy Aimer 304, with M20 adapter and 1" and 1½" BSPT 304 stainless steel couplings	**7ML1830-1GN**
Plastic adapter 1" BSP - 20 mm	**7ML1830-1EA**
Plastic adapter 1" NPT	**7ML1930-1FX**
Plastic adapter 1" NPT/M20	**7ML1830-1EF**

© Siemens 2020

Selection and ordering data

	Article No.
EchoMax XPS-15F Ultrasonic level transducer ↗	**7ML1171-**
Continuous, non-contact, 15 m (49.21 ft), for liquids and solids.	■ ■ ■ ■ **0**
↗ Click on the Article No. for the online configuration in the PIA Life Cycle Portal.	
Mounting thread and facing	
1" NPT [(Taper), ANSI/ASME B1.20.1]	**1**
Cable length	
5 m (16.40 ft)	**B**
10 m (32.81 ft)	**C**
30 m (98.43 ft)	**D**
50 m (164.04 ft)	**E**
100 m (328.08 ft)	**F**
Mounting flange, flush mount	
None	**A**
6" ASME, 150 lb, flat faced	**B**
8" ASME, 150 lb, flat faced (Note: Flange bolting patterns and facings dimensionally correspond to the applicable ASME B16.5, or EN 1092-1, or JIS B 2220 standard.)	**C**
Approvals	
FM Class I, Div. 1, Groups A, B, C, and D, Class II Div. 1, Groups E, F, and G, Class III	**1**

	Order code
Further designs	
Please add "**-Z**" to Article No. and specify Order code(s).	
Stainless steel tag [69 x 50 mm (2.71 x 1.97 inch)]: Measuring point number/ identification (max. 27 characters) specify in plain text	**Y15**
Operating Instructions	
All literature is available to download for free, in a range of languages, at	
http://www.siemens.com/processinstrumentation/documentation	
Accessories	Article No.
Tag, stainless steel with hole, 12 x 45 mm (0.47 x 1.77 inch), one text line for fastening on sensors	**7ML1930-1BJ**
Submergence shield kit	**7ML1830-1BJ**
Universal box bracket, mounting kit	**7ML1830-1BK**
Channel bracket, wall mount	**7ML1830-1BL**
Extended channel bracket, wall mount	**7ML1830-1BM**
Channel bracket, floor mount	**7ML1830-1BN**
Extended channel bracket, floor mount	**7ML1830-1BP**
Bridge channel bracket, floor mount (see Mounting Brackets on page 4/186 for more information)	**7ML1830-1BQ**
1" NPT locknut, plastic	**7ML1830-1DS**
Easy Aimer 2, aluminum, NPT with ¾" x 1" PVC coupling	**7ML1830-1AQ**
Easy Aimer 304, NPT with 1" stainless steel coupling	**7ML1830-1AU**

© Siemens 2020

Selection and ordering data

	Article No.
EchoMax XPS-30 Ultrasonic level transducer ↗	**7ML1123-**
Continuous, non-contact, 30 m (98.42 ft) for liquids and solids.	■ ■ ■ ■ **0**
↗ Click on the Article No. for the online configuration in the PIA Life Cycle Portal.	
Mounting thread and facing	
1½" universal thread	**0**
1½" universal thread, foam facing[1]	**1**
1½" universal thread, PTFE facing[2]	**2**
Cable length	
5 m (16.40 ft)	**B**
10 m (32.81 ft)	**C**
30 m (98.43 ft)	**E**
50 m (164.04 ft)	**F**
100 m (328.08 ft)	**K**
Mounting flange	
None	**A**
6" ASME, 150 lb, flat faced	**D**
8" ASME, 150 lb, flat faced	**E**
DN 150, PN 10/16, Type A, flat faced	**J**
DN 200, PN 10, Type A, flat faced	**K**
JIS10K 6B	**N**
JIS10K 8B	**P**
(Note: Flange bolting patterns and facings dimensionally correspond to the applicable ASME B16.5 or EN 1092-1, or JIS B 2220 standard.)	
Approvals	
ATEX 2G 1D Ex mb IIC T4 Gb, Ex ta IIIC T135 °C Da; IECEx SIR 13.0009X Ex mb IIC T4 Gb, Ex ta IIIC T135 °C Da	**5**

[1] Not available with flanged versions.

[2] Available with flanged versions only.

	Order code
Further designs	
Please add "**-Z**" to Article No. and specify Order code(s).	
Stainless steel tag [69 x 50 mm (2.71 x 1.97 inch)]: measuring-point number/identification (max. 27 characters) specify in plain text	**Y15**
Operating Instructions	
All literature is available to download for free, in a range of languages, at	
http://www.siemens.com/processinstrumentation/documentation	
Accessories	Article No.
Tag, stainless steel with hole, 12 x 45 mm (0.47 x 1.77 inch), one text line for fastening on sensors	**7ML1930-1BJ**
1½" BSPT locknut, plastic	**7ML1830-1DP**
Easy Aimer 2, aluminum, NPT with 1½" galvanized coupling	**7ML1830-1AN**
Easy Aimer 304, NPT with 1½" stainless steel coupling	**7ML1830-1AT**
Easy Aimer 2, aluminum with M20 adapter and 1" and 1½" BSPT aluminum couplings	**7ML1830-1AX**
Easy Aimer 304, with M20 adapter and 1" and 1½" BSPT 304 stainless steel couplings	**7ML1830-1GN**
Adapter 1½" BSP	**7ML1830-1EB**

© Siemens 2020

Selection and ordering data

	Article No.
EchoMax XPS-30C Ultrasonic level transducer ↗	**7ML1155-**
Continuous, non-contact, 30 m (98.42 ft) for liquids and solids.	■ ■ ■ ■ **1**
↗ Click on the Article No. for the online configuration in the PIA Life Cycle Portal.	
Mounting thread and facing	
1½" universal thread	**0**
1½" universal thread, foam facing[1]	**1**
1½" universal thread, PTFE facing[2]	**2**
Cable length	
5 m (16.40 ft)	**B**
10 m (32.81 ft)	**C**
30 m (98.43 ft)	**E**
50 m (164.04 ft)	**F**
100 m (328.08 ft)	**K**
Mounting flange	
None	**A**
6" ASME, 150 lb, flat faced	**D**
8" ASME, 150 lb, flat faced	**E**
DN 150, PN 10/16, Type A, flat faced	**J**
DN 200, PN 10, Type A, flat faced	**K**
JIS10K 6B	**N**
JIS10K 8B	**P**
(Note: Flange bolting patterns and facings dimensionally correspond to the applicable ASME B16.5 or EN 1092-1, or JIS B 2220 standard.)	
Approvals	
CSA, Class I, Div. 2, Groups A, B, C, D; Class II, Div. 1, Groups E, F, G; Class III	**4**

[1] Not available with flanged version.
[2] Available for flanged versions only.

	Order code
Further designs	
Please add "**-Z**" to Article No. and specify Order code(s).	
Stainless steel tag [69 mm x 50 mm (2.71 x 1.97 inch)]: Measuring-point number/identification (max. 27 characters) specify in plain text	**Y15**
Operating Instructions	
All literature is available to download for free, in a range of languages, at	
http://www.siemens.com/processinstrumentation/documentation	

Accessories	Article No.
Easy Aimer 2, aluminum, NPT with 1½" galvanized coupling	**7ML1830-1AN**
Easy Aimer 304, NPT with 1½" stainless steel coupling	**7ML1830-1AT**
1½" BSPT locknut, plastic	**7ML1830-1DP**
Adapter 1½" BSP	**7ML1830-1EB**

© Siemens 2020

Dimensional drawings

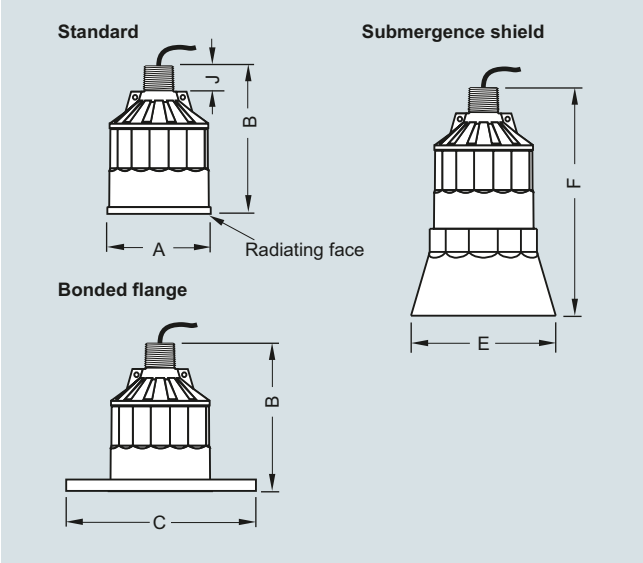

XPS ultrasonic transducer

Version			
Dimension	**XPS-10**	**XPS-15**	**XPS-30**
A	88 mm (3.464 inch)	121 mm (4.764 inch)	175 mm (6.890 inch)
B	122 mm (4.803 inch)	132 mm (5.197 inch)	198 mm (7.795 inch)
C	According to ASME, DIN, and JIS		
E	124 mm (4.882 inch)	158 mm (6.220 inch)	n/a
F	152 mm (5.984 inch)	198 mm (7.795 inch)	n/a
J	28 mm (1.1 inch)	28 mm (1.1 inch)	28 mm (1.1 inch)

Circuit diagrams

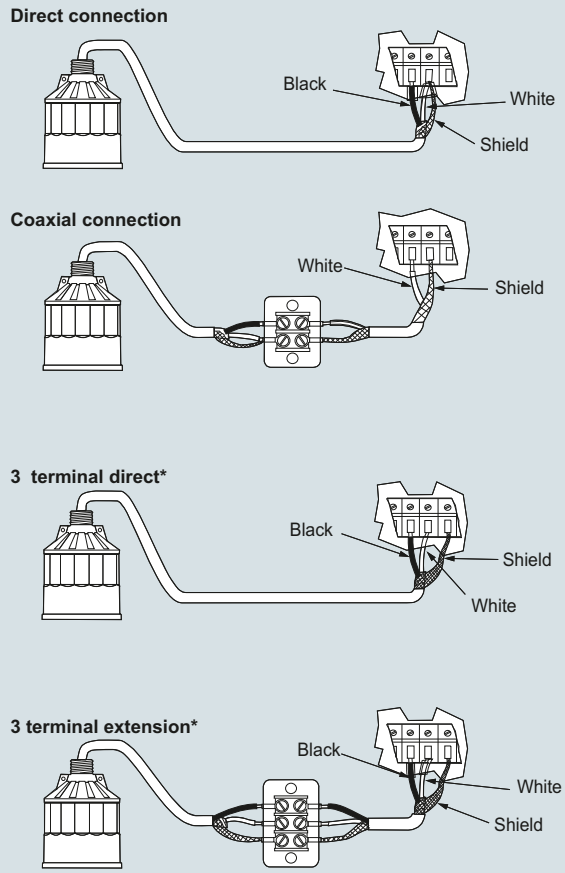

* For SITRANS LUT400, MultiRanger 100/200, HydroRanger 200

Mounting
Make particularly sure that the radiating face of the transducer is protected from damage. Mount the transducer so that it is above the maximum material level by at least the blanking value. On liquid applications, the transducer must be mounted so that the axis of transmission is perpendicular to the liquid surface. On solids applications, an Easy Aimer should be used to facilitate aiming the transducer. Consider the optional temperature sensor when mounting the transducer.

Interconnection
Do not route cable openly or near high voltage or current runs, contactors and SCR control drives. For optimum isolation against electrical noise, run cable separately in a grounded metal conduit. Seal all thread connections to prevent ingress of moisture.

XPS ultrasonic transducer connections

© Siemens 2020

EA aiming devices

Application

EA 304 aiming device

The Easy Aimer 304 flange is a stainless steel aiming device for alignment of Siemens level sensors used for level measurement of bulk solids.

The sensor must be mounted aimed towards the low level draw point in the silo. The sensor can be rotated through 360° and angled at 0 to 27° off vertical. It must be mounted using an access plate with welded studs or a flange in order to isolate the mounting holes from the pressurized environment. When installed properly, the EA 304 aiming device is capable of withstanding pressures up to 0.5 bar (Europe) or 15 psi (North America). It can even be used in corrosive and aggressive environments.

EA 2 aiming device

The Easy Aimer 2 flange is a cast aluminum aiming device for alignment of Siemens level sensors.

The flange has graduated adjustments and an adjustable insertion length. When used for applications with bulk solids, the sensor is mounted so that it is aimed towards the lower level draw point in the silo. The sensor can be rotated through 360° and angled at 0 to 20° off vertical. It must be mounted using an access plate with welded studs or a flange in order to isolate the mounting holes from the pressurized environment. When installed properly, the EA 2 aiming device is capable of withstanding pressures up to 0.5 bar (Europe) or 15 psi (North America). It can even be used in corrosive and aggressive environments.

Selection and ordering data

	Article No.
Easy aimer Used on solids applications to aim level sensors for optimal performance. Available in a 304 stainless steel model, or a cast aluminum model.	
Easy Aimer 2, aluminum with M20 adapter and 1" and 1½" BSPT aluminum couplings	**7ML1830-1AX**
Easy Aimer 304, with M20 adapter and 1" and 1½" BSPT 304 stainless steel couplings	**7ML1830-1GN**
Easy Aimer 2, aluminum, BSPT conduit	**7ML1830-1AL**
Easy Aimer 2, aluminum, NPT with 1½" galvanized coupling[1)]	**7ML1830-1AN**
Easy Aimer 2, aluminum, NPT with 1" galvanized coupling	**7ML1830-1AP**
Easy Aimer 2, aluminum, NPT with ¾" x 1" PVC coupling	**7ML1830-1AQ**
Easy Aimer 304, BSPT conduit	**7ML1830-1AS**
Easy Aimer 304, NPT with 1½" stainless steel coupling[1)]	**7ML1830-1AT**
Easy Aimer 304, NPT with 1" stainless steel coupling	**7ML1830-1AU**
Operating Instructions	
All literature is available to download for free, in a range of languages, at	

http://www.siemens.com/processinstrumentation/documentation

1) For use with XPS-30 transducers only.

© Siemens 2020

Dimensional drawings

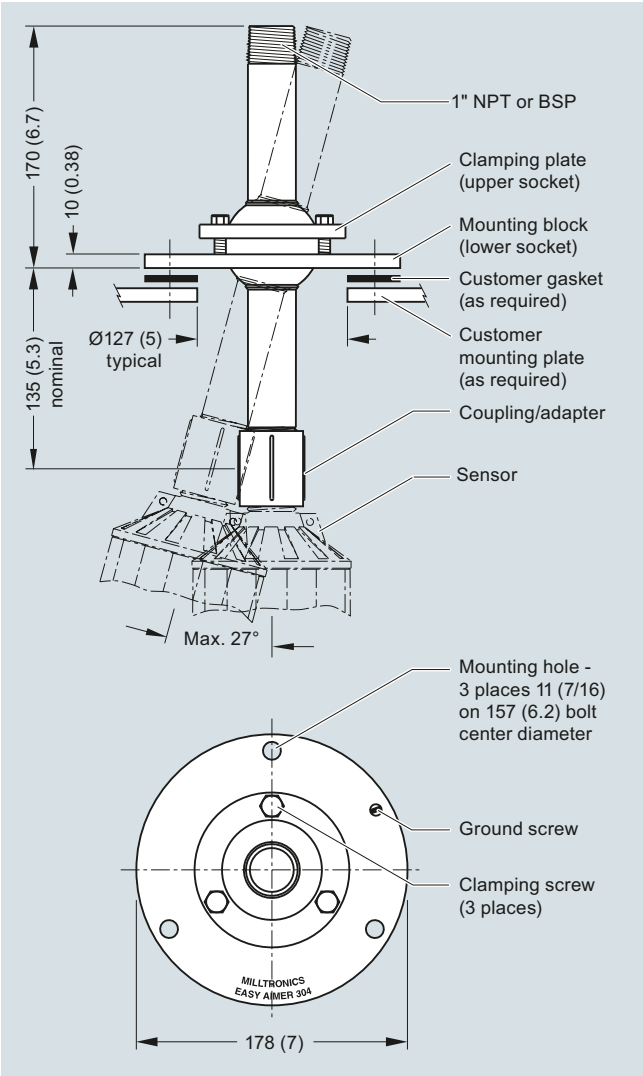

EA 304 aiming device, dimensions in mm (inch)

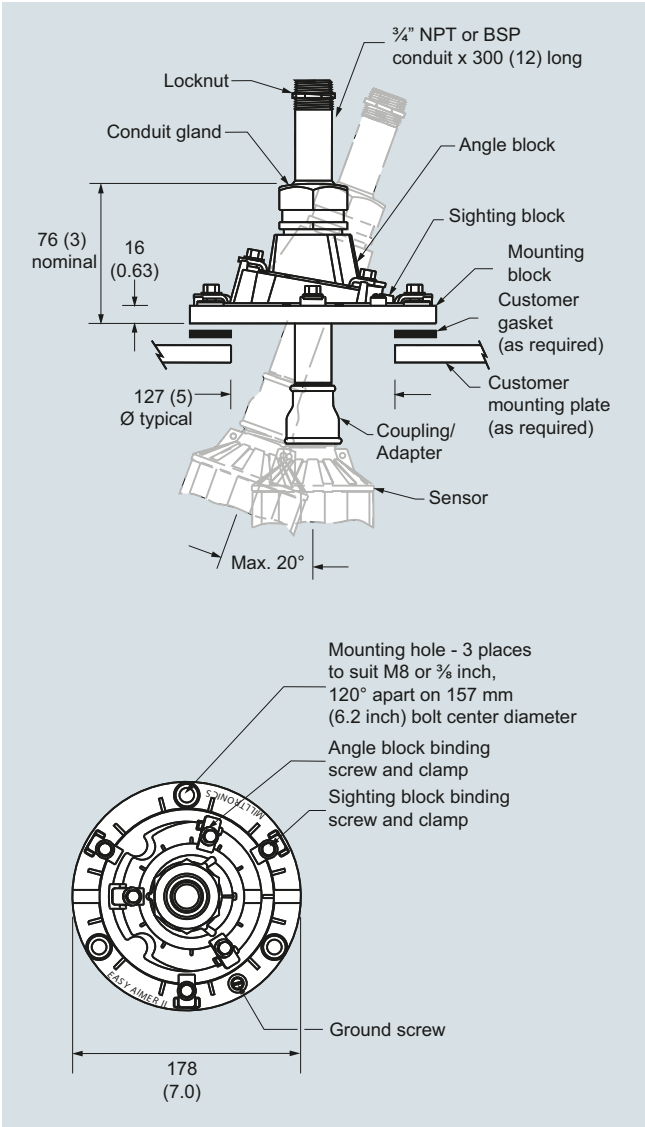

EA 2 aiming device, dimensions in mm (inch)

© Siemens 2020

FMS mounting brackets

Application

Siemens mounting brackets permit simple, fast installation of ultrasonic transducers. These rugged, high quality mounting brackets are constructed of 304 (1.4301) stainless steel and are suitable for use indoors and outdoors. They adjust to fit almost any application, saving you the time and expense of building custom brackets. Each kit includes all mounting parts.

FMS-200
universal box bracket system

Mounting of units with 1 inch or 2 inch threaded connection.

Distance from sensor to wall or beam: 20 ... 31 cm (8 ... 12 inch).

The unique box design also acts as a sun shield for transducers with 1 inch threaded connections.

FMS-210
wall mounting set

Mounting of transducers with 1 inch threaded connection.

Distance from transducer to wall or beam:
12 ... 48 cm (5 ... 19 inch).

FMS-220
extended wall mounting set

Mounting of transducers with 1 inch threaded connection.

Distance from transducer to wall or beam:
32 ... 98 cm (13 ... 39 inch).

FMS-310
floor mounting set

Mounting of transducers with 1 inch threaded connection.

Distance from transducer to floor: 20 ... 48 cm (8 ... 19 inch).

Distance from mounting support: 5 ... 57 cm (2 ... 22 inch).

FMS-320
extended floor mounting set

Mounting of transducers with 1 inch threaded connection.

Distance from transducer to floor: 20 ... 48 cm (8 ... 19 inch).

Distance from mounting support: 41 ... 108 cm (16 ... 43 inch).

FMS-350
floor mounting set, bridge

Mounting of transducers with 1 inch threaded connection.

Distance from transducer to floor: 20 ... 48 cm (8 ... 19 inch), anywhere along the complete width of the bridge [166 cm (65 inch)].

This kit is particularly suitable for measurements on open channels (OCM) by providing a very stable mount for the transducer above a flume or weir.

Integration

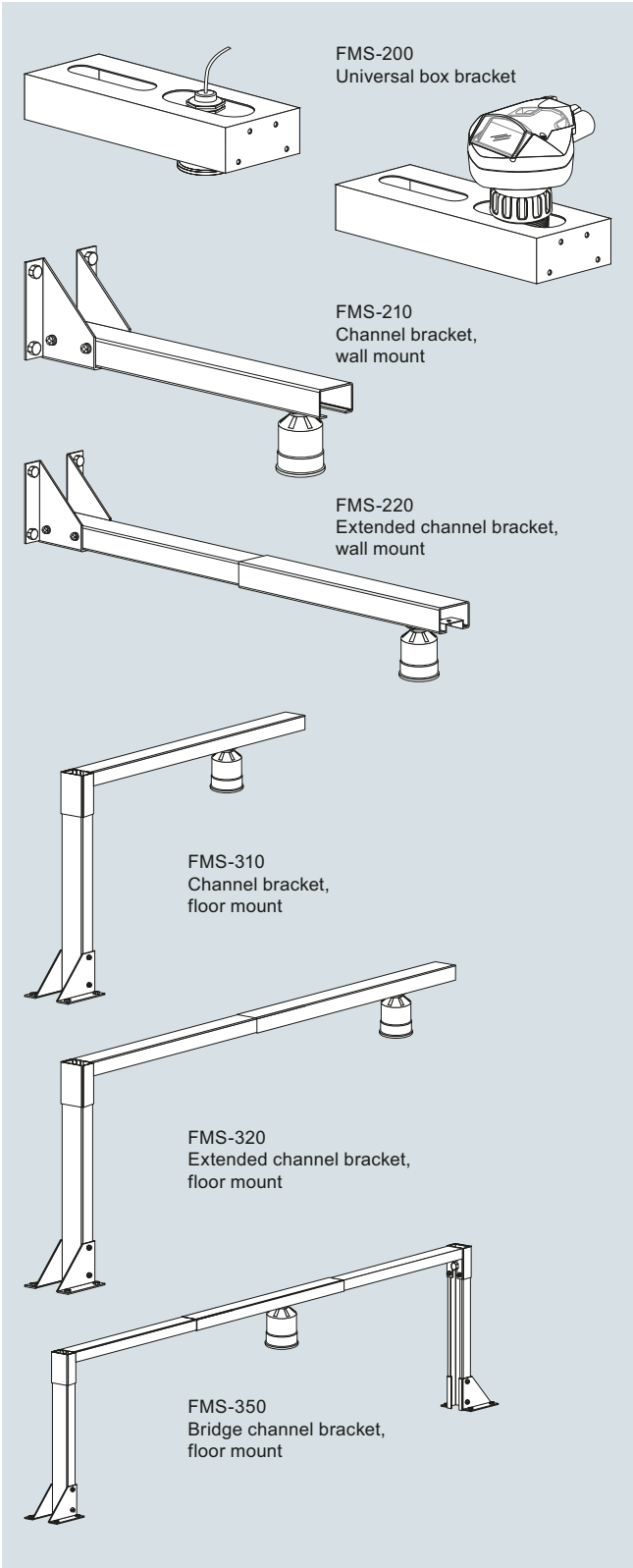

FMS mounting brackets

© Siemens 2020

Selection and ordering data

	Article No.
Mounting brackets for XPS-10 sensors	
FMS-200 universal box bracket set	**7ML1830-1BK**
FMS-210 wall mounting set	**7ML1830-1BL**
FMS-220 extended wall mounting set	**7ML1830-1BM**
FMS-310 floor mounting set	**7ML1830-1BN**
FMS-320 extended floor mounting set	**7ML1830-1BP**
FMS-350 floor mounting set, bridge	**7ML1830-1BQ**
Additional Operating Instructions	
FMS-200	**7ML1998BK61**
FMS-210	**7ML19985BL61**
FMS-220	**7ML19985BM61**
FMS-310	**7ML19985BN61**
FMS-320	**7ML19985BP61**
FMS-350	**7ML19985BQ61**
Note: The Operating Instructions should be ordered as a separate line item on the order. All literature is available to download for free, in a range of languages, at	

http://www.siemens.com/processinstrumentation/documentation

© Siemens 2020

TS-3 temperature sensor

Overview

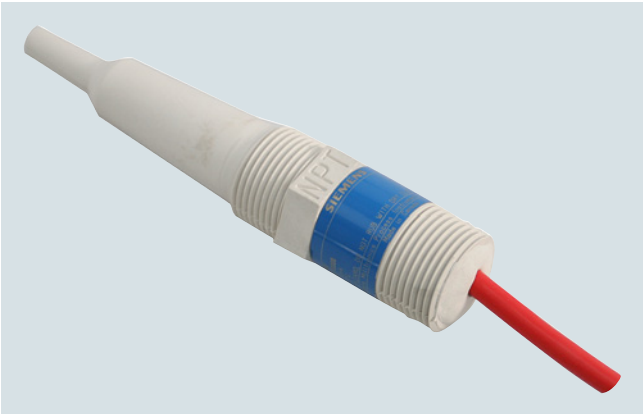

The TS-3 temperature sensor provides an input signal for temperature compensation of specific Siemens ultrasonic level controllers.

Benefits

- Chemically resistant ETFE enclosure
- Fast response time
- Approved for use in potentially explosive atmospheres

Application

Temperature compensation is essential in applications where temperature variations of the sound medium are expected.

By installing the temperature sensor close to the sound path of the associated ultrasonic transducer, a signal representative of the sound medium's ambient temperature is obtained. The temperature sensor should not be mounted in direct sunlight.

The TS-3 is used in conjunction with ultrasonic transducers that do not have an integral temperature sensor. It is also recommended in cases where the integral temperature sensor of the transducer cannot be used.

The following conditions are typical for use of the TS-3 sensor: where a fast reaction to temperature variations is required, where a flanged ultrasonic transducer is used, or where high temperatures are encountered.

The TS-3 is not compatible with devices using the TS-2 or LTS-1 temperature sensors. Refer to the associated controller manual for more details.

- Key Applications: for use in applications where temperature sensor measurement from transducer does not accurately represent vessel temperature. Used for applications requiring quick temperature response (open channel monitoring).

Design

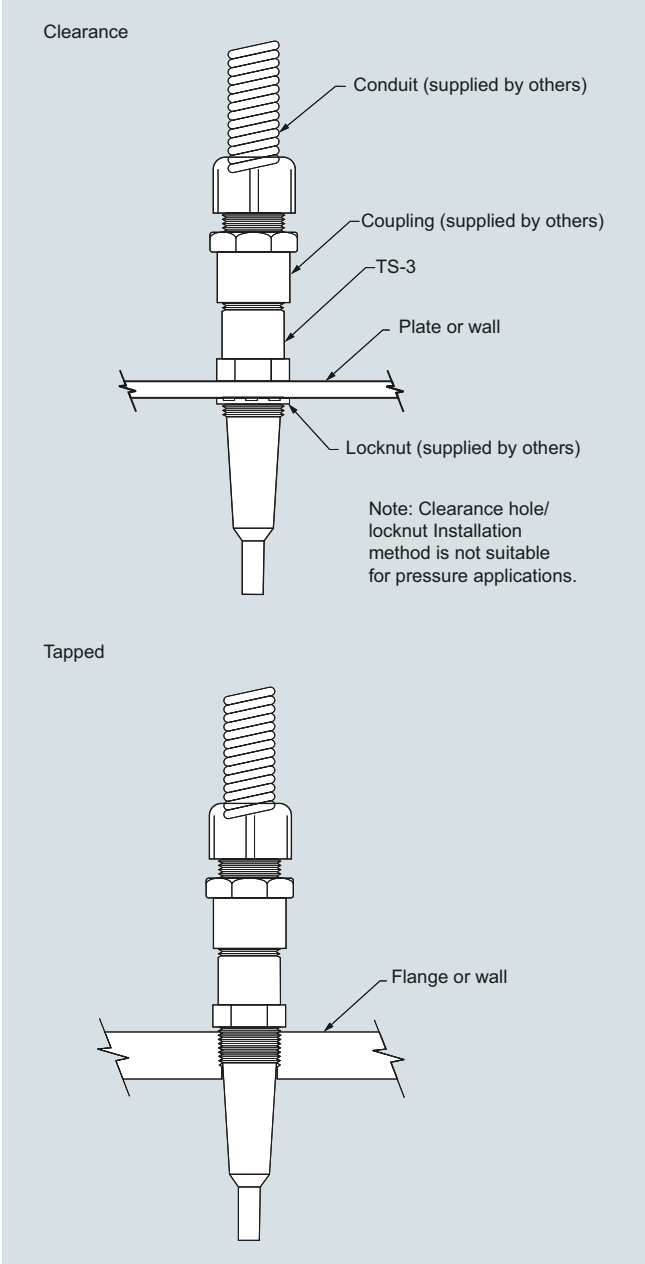

TS-3 temperature sensor

© Siemens 2020

Technical specifications

Mode of operation	
Measuring principle	Temperature sensor
Input	
Measuring range	-40 ... +100 °C (-40 ... +212 °F)
Output	
Response time	
• Forced circulation (temperature variation: 63 %)	55 s
• Flange, forced circulation	90 s
• Natural convection	150 s
Rated operating conditions	
Installation instructions	Mounted indoors/outdoors, but not exposed to direct sunlight
Pressure	Max. 4 bar (60 psi/400 kPa)
Design	
Material (enclosure)	ETFE[1)]
Cable connection	2-core, 0.5 mm² (20 AWG), shielded, silicone sheath
Process connection	¾" NPT [(Taper), ANSI/ASME B1.20.1] R ¾" [(BSPT), EN 10226], totally encapsulated
Certificates and approvals	CE, IEC Ex, FM, CSA, ATEX

1) ETFE is a fluoropolymer inert to most chemicals. For exposure to specific environments, check the chemical compatibility charts before installing the TS-3 in your application.

Dimensional drawings

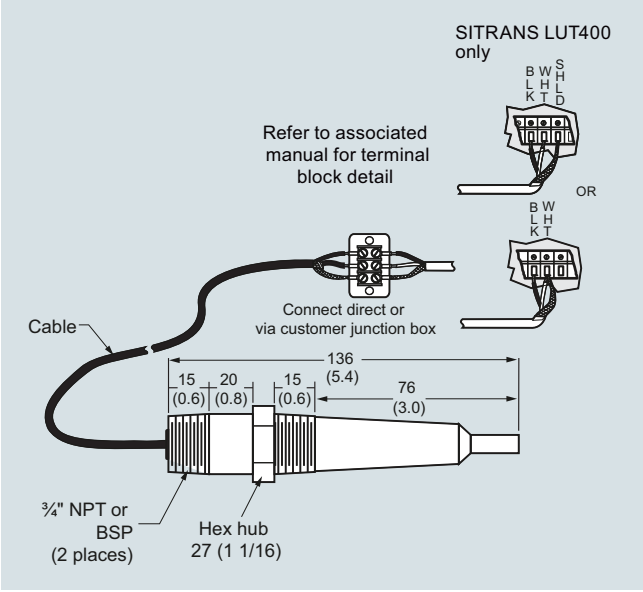

TS-3 temperature sensor, dimensions in mm (inch)

Selection and ordering data

	Article No.
TS-3 Temperature sensor ↗	**7ML1813-**
Continuous, non-contact, sensor for use with ultrasonic level controllers.	■ ■ **B** ■
↗ Click on the Article No. for the online configuration in the PIA Life Cycle Portal.	
Cable length	
1 m (3.28 ft)	**1**
5 m (16.40 ft)	**2**
10 m (32.81 ft)	**3**
30 m (98.43 ft)	**4**
50 m (164.04 ft)	**5**
70 m (229.66 ft)	**6**
90 m (295.28 ft)	**7**
Process connection	
¾" NPT [(Taper), ANSI/ASME B1.20.1]	**A**
R ¾" [(BSPT), EN 10226]	**B**
Approvals	
CSA, FM	**3**
CE, ATEX, IEC Ex	**4**
Operating Instructions	
All literature is available to download for free, in a range of languages, at	
http://www.siemens.com/processinstrumentation/documentation	
Accessories	
¾" NPT locknut, aluminum	**7ML1930-1BE**
Tag, stainless steel with hole, 12 x 45 mm (0.47 x 1.77 inch) for fastening on sensors	**7ML1930-1BJ**

© Siemens 2020

Overview

Radar measurement technology is non-contacting and low maintenance. Because microwaves require no carrier medium, they are virtually unaffected by the process atmosphere (vapor, pressure, dust, or temperature extremes). Siemens offers a variety of models to meet the specific needs of your application.

SITRANS Probe LR is a 2-wire, 6 GHz pulse radar level transmitter for continuous monitoring of liquids and slurries in storage vessels with nominal pressure and temperature, to a range of 20 m (66 ft).

SITRANS LR100 is a 2 wire loop powered radar transmitter for continuous level measurement of liquids and slurries to a range of 8 m (26 ft).

SITRANS LR110 is a compact radar transmitter for continuous level measurement of liquids, slurries, and solids to a range of 15 m (49.2 ft).

SITRANS LR120 is a compact radar transmitter for continuous level measurement of liquids and solids to a range of 30 m (98.4 ft).

SITRANS LR140 is a 2 wire loop powered radar transmitter for continuous level measurement of liquids and slurries to a range of 8 m (26 ft).

SITRANS LR150 is a compact radar transmitter for continuous level measurement of liquids, slurries, and solids to a range of 15 m (49.2 ft), with optional HMI.

SITRANS LR200 is a 2-wire, 6 GHz pulse radar level transmitter for continuous monitoring of liquids and slurries in process vessels including high temperature, pressure, agitation, and turbulence, to a range of 20 m (65 ft).

SITRANS LR250 is a 2-wire, 25 GHz pulse radar level transmitter for continuous monitoring of liquids and slurries in storage and process vessels including high temperature and pressure, corrosive or aggressive materials, to a range of 20 m (66 ft). Ideal for small vessels and low dielectric media.

SITRANS LR460 is a 4-wire, 24 GHz FMCW radar level transmitter with extremely high signal to noise ratio and advanced signal processing for continuous monitoring of solids, up to 100 m (328 ft). It is ideal for measurement in extreme dust and high temperature applications.

SITRANS LR560 2-wire, 78 GHz FMCW radar level transmitter for continuous monitoring of solids and liquids, to a range of 100 m (328 ft). It is easy to install, plug and play, and there is virtually no maintenance.

Auto False-Echo Suppression

SITRANS LR instruments offer the unique advantage of Process Intelligence signal processing technology. This in-depth knowledge and experience is built into the software's advanced algorithms to provide intelligent processing of echo profiles. The result is repeatable, fast and reliable measurement.

A special feature of SITRANS radar devices is Auto False-Echo Suppression, an echo processing technique that automatically detects and suppresses false echoes from vessel obstructions. You can implement this feature using two parameters on the local interface or SIMATIC PDM communicating over HART or PROFIBUS PA.

Local display interface – graphically displays echo profiles and diagnostic information (available with LR200, LR250, and LR560)
Quick to configure – Quick Start Wizard via SIMATIC PDM guides you during setup

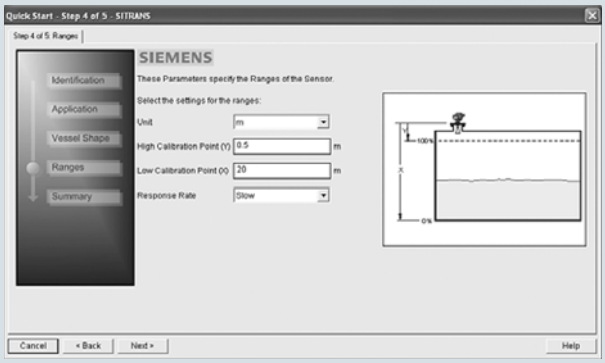

© Siemens 2020

Mode of operation

Principle of Operation

Radar measurement technology measures the time of flight from the transmitted signal to the return signal. From this time, distance measurement and level are determined.

Unlike ultrasonic measurement, radar technology does not require a carrier medium and travels at the speed of light (300 000 000 m/s). Most industrial radar devices operate from 6 to 78 GHz.

Siemens offers pulse radar transmitters (SITRANS Probe LR, SITRANS LR200, SITRANS LR250) and FMCW (Frequency Modulated Continuous Wave) radar transmitters (SITRANS LR100, SITRANS LR110, SITRANS LR120, SITRANS LR140, SITRANS LR150, SITRANS LR460, SITRANS LR560).

Pulse radar emits a microwave pulse from the antenna at a fixed repetition rate that reflects off the interface between the two materials with different dielectric constants (the atmosphere and the material being monitored).

The echo is detected by a receiver and the transmit time is used to calculate level.

Reflected echoes are digitally converted to an echo profile. The profile is analyzed to determine the distance from the material surface to the reference point on the instrument.

FMCW (Frequency Modulated Continuous Wave) radar devices send microwaves to the surface of the material. The wave frequency is modulated continuously. At the same time, the receiver is also receiving continuously and the difference in frequency between the transmitter and the receiver is directly proportional to the distance to the material.

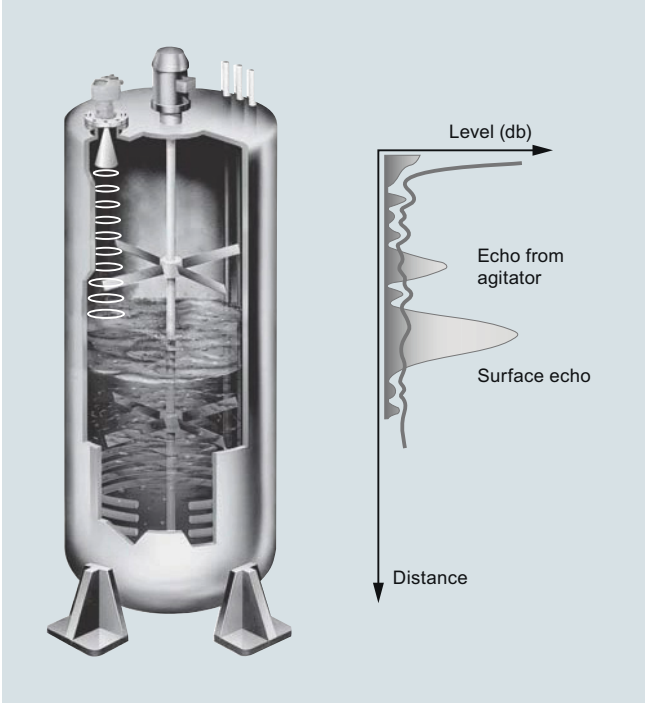

Radar operation in a reactor vessel

© Siemens 2020

Technical specifications

Radar Selection Guide

Criteria	SITRANS Probe LR	SITRANS LR200	SITRANS LR100	SITRANS LR110	SITRANS LR120
Typical industries	Chemicals, petrochemicals, water/waste-water, drilling mud	Chemicals, petrochemicals, aluminum, wastewater	Chemicals, petrochemicals, mining, food and beverage	Chemicals, petrochemicals, mining, food and beverage	Chemicals, petrochemicals, mining, food and beverage
Typical applications	Liquids, storage vessels, wet wells, drilling mud tanks	Liquids, process vessels with agitators, buildup, high temperatures	Liquid storage vessels, non-intrusively through plastic tanks, chemicals, aggregates	Liquid storage vessels, non-intrusively through plastic tanks, chemicals, aggregates	Liquid storage vessels, non-intrusively through plastic tanks, chemicals, aggregates
Range	0.3 ... 20 m (1 ... 65 ft)	0.4 ... 20 m (1.3 ... 65 ft)	0 ... 8 m (0 ... 26 ft)	0 ... 15 m (0 ... 49.2 ft)	0 ... 30 m (0 ... 98.4 ft)
Frequency	6.3 GHz	6.3 GHz	80 GHz nominal	80 GHz nominal	80 GHz nominal
Performance accuracy	0.1 % of range or 10 mm (0.4 inch)	0.1 % of range or 10 mm (0.4 inch)	± 5 mm	± 2 mm	± 2 mm
Temperature	Ambient: -40 ... +80 °C (-40 ... +176 °F) Process: -40 ... +80 °C (-40 ... +176 °F)	Ambient: -40 ... +80 °C (-40 ... +176 °F) Process: -40 ... +200 °C (-40 ... +392 °F), dependent on antenna type	Ambient: -40 ... +60 °C (-40 ... +140 °F) Process: -40 ... +60 °C (-40 ... +140 °F)	Ambient: -40 ... +80 °C (-40 ... +176 °F) Process: -40 ... +80 °C (-40 ... +176 °F)	Ambient: -40 ... +80 °C (-40 ... +176 °F) Process: -40 ... +80 °C (-40 ... +176 °F)
Output/ communications/ remote configuration and diagnostics	• 4 ... 20 mA/HART • SIMATIC PDM	• 4 20 mA/HART • PROFIBUS PA • SIMATIC PDM • AMS • SITRANS DTM/FDT for PACTware, Fieldcare, etc.	• 4 ... 20 mA • SITRANS mobile IQ	• 4 ... 20 mA/HART • Modbus RTU • SITRANS mobile IQ • SIMATIC PDM • AMS • SITRANS DTM/FDT for PACTware, Fieldcare	• 4 ... 20 mA/HART • Modbus RTU • SITRANS mobile IQ • SIMATIC PDM • AMS • SITRANS DTM/FDT for PACTware, Fieldcare
Power	• 24 V DC nominal • Loop powered	• 24 V DC nominal • Loop powered	• 12 ... 35 V DC • Loop powered	HART: • 12 ... 35 V DC • Loop powered Modbus: • 8 … 30 V DC • Loop powered	HART: • 12 ... 35 V DC • Loop powered Modbus: • 12 ... 35 V DC • Loop powered
Approvals	CE, RCM, Lloyds Register of Shipping, ABS,FCC, Industry Canada, RED ATEX,CSA, FM, INMETRO, EAC, IECEx, ANZEx, TIIS	CE, RCM, Lloyds Register of Shipping, ABS, FCC, Industry Canada, RED ATEX, CSA, FM, INMETRO, EAC, IECEx, ANZEx, TIIS, NEPSI	General Purpose CE, CSA, FM, RCM	Hazardous ATEX, IECEx, CE, CSA, FM, RCM	Hazardous ATEX, IECEx, CE, CSA, FM, RCM

© Siemens 2020

Technical specifications (continued)

Criteria	SITRANS LR140	SITRANS LR150	SITRANS LR250	SITRANS LR460	SITRANS LR560
Typical industries	Chemicals, petrochemicals, mining, food and beverage	Chemicals, petrochemicals, mining, food and beverage	Chemicals, petrochemicals, oil and gas, mining, marine, food and beverage, pharmaceutical	Cement, power generation, food processing, mineral processing, mining	Cement, chemical, power generation, grain, food processing, mineral processing, mining
Typical applications	Liquid storage vessels, non-intrusively through plastic tanks, chemicals, aggregates	Liquid storage vessels, non-intrusively through plastic tanks, chemicals, aggregates	Liquids, storage and process vessels with agitators, vaporous liquids, high temperatures, low dielectric media, crude oil produced water	Cement, fly ash, grain, coal, flour, plastics	Cement, fly ash, chemical fertilizer, grain, coal, flour, plastics, environmental water level monitoring
Range	8 m (26.2 ft)	15 m (49.2 ft)	50 mm (2 inch) from end of horn to 20 m (65 ft), horn dependent	100 m (328 ft)	40 m (131 ft) 100 m (328 ft)
Frequency	80 GHz nominal	80 GHz nominal	K-band (25.0 GHz)	24 ... 25 GHz FMCW	78 ... 79 GHz
Performance accuracy	5 mm	2 mm	≤ 3 mm (0.118 inch)	0.25 %	5 mm (0.2 inch)
Temperature	Ambient: -40 ... +60 °C (-40 ... +140 °F) Process: -40 ... +60 °C (-40 ... +140 °F)	Ambient: -40 ... +70 °C (-40 ...+158 °F) Process: -40 ... +80 °C (-40 ... +176 °F)	Ambient: -40 ... +80 °C (-40 ... +176 °F) Process: -40 ... +200 °C (-40 ... +392 °F), dependent on antenna type	Ambient: 65 °C (149 °F) Process: 200 °C (392 °F)	Ambient: -40 ... +80 °C (-40 ... +176 °F) Process: -40 ... +100 °C (-40 ... 212 °F) Optional: 200 °C (392 °F)
Output/ communications/ remote configuration and diagnostics	• 4 ... 20 mA • SITRANS mobile IQ	• 4 ... 20 mA/HART • SITRANS mobile IQ • SIMATIC PDM • AMS • SITRANS DTM/FDT for PACTware, Fieldcare	• 4 ... 20 mA/HART • PROFIBUS PA • FOUNDATION Fieldbus • SIMATIC PDM • AMS • SITRANS DTM/FDT for PACTware, Fieldcare, etc.	• 4 ... 20 mA/HART • PROFIBUS PA • SIMATIC PDM	• 4 ... 20 mA/HART • PROFIBUS PA • SIMATIC PDM • AMS • SITRANS DTM/FDT for PACTware, Fieldcare, etc.
Power	• 12 ... 35 V DC • Loop powered	HART: • 12 ... 35 V DC • Loop powered	• 24 V DC nominal • Loop powered	• 100 ... 230 V AC, ± 15 %, 50/60 Hz, 6 W • 24 V DC, +25/-20 %, 6 W	• 24 V DC nominal • Loop powered
Approvals	General purpose CE, CSA, FM, RCM	Hazardous ATEX, IECEx, CE, CSA, FM, RCM	CE, RCM, Lloyds Register of Shipping, ABS, BV, FCC, Industry Canada, RED ATEX, CSA, FM, INMETRO, EAC, IECEx, TIIS, NEPSI Functional safety SIL-2, EHEDG, 3-A, USP Class VI	CE, RCM, FCC, Industry Canada, RED ATEX, CSA, FM, INMETRO, IECEx, EAC	CE, RCM, FCC, Industry Canada, RED ATEX, CSA, FM, INMETRO, IECEx, NEPSI, EAC

© Siemens 2020

Overview

SITRANS Probe LR is a 2-wire, 6 GHz pulse radar level transmitter for continuous monitoring of liquids and slurries in storage vessels with nominal pressure and temperature, to a range of 20 m (66 ft).

Benefits

- Uni-Construction polypropylene rod antenna standard
- Easy installation and simple startup
- Programming using infrared Intrinsically Safe handheld programmer, SIMATIC PDM or HART handheld communicator
- Communication using HART
- Process Intelligence signal processing
- Auto False-Echo Suppression of false echoes

Application

The Probe LR is ideal for applications with chemical vapors, temperature gradients, vacuum or pressure, such as simple chemical storage or water treatment vessels. SITRANS Probe LR has a range of 0.3 to 20 m (1 to 65 ft).

Probe LR is designed for safe and simple programming using the Intrinsically Safe handheld programmer without having to open the instrument's lid. It has a standard Uni-Construction polypropylene rod antenna that offers excellent chemical resistance and is hermetically sealed. The Uni-Construction antenna includes an internal, integrated shield that eliminates vessel nozzle interference.

SITRANS Probe LR incorporates Process Intelligence signal processing. The Probe LR also has a high signal-to-noise ratio leading to improved reliability.

Startup is easy with as few as two parameters for basic operation. Programming is simple using SIMATIC PDM, HART handheld communicator or the Intrinsically Safe handheld programmer.

- Key Applications: chemical storage, wastewater wet well, and drilling mud

Configuration

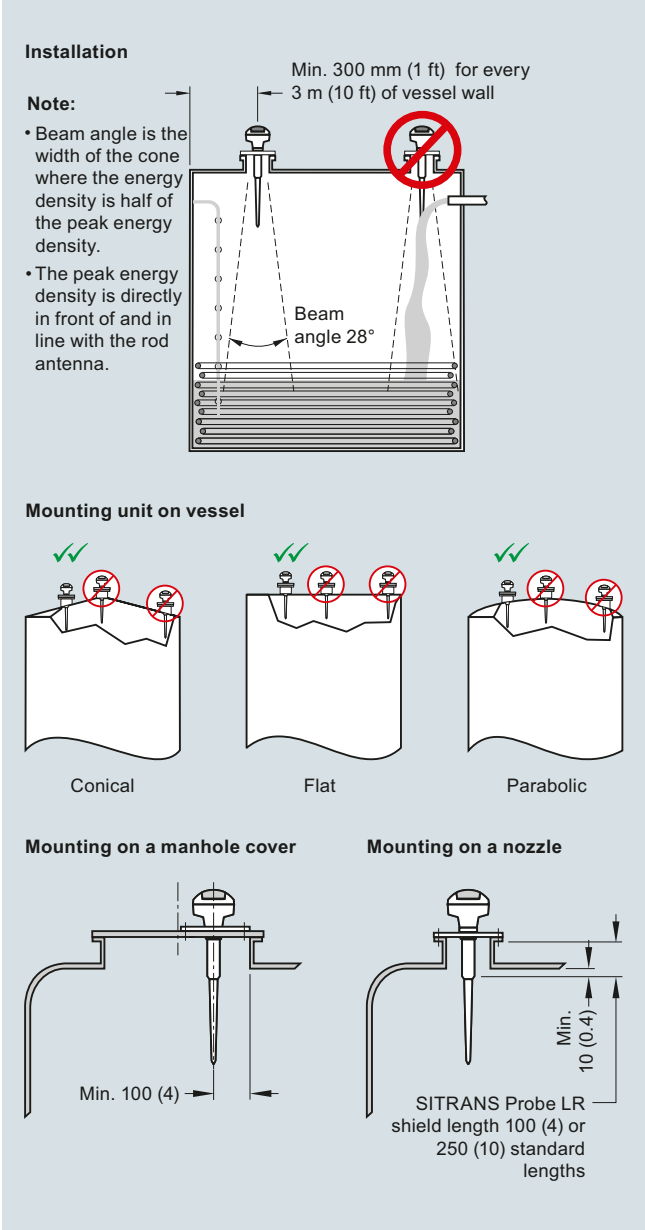

SITRANS Probe LR installation, dimensions in mm (inch)

© Siemens 2020

Technical specifications

Mode of operation	
Measuring principle	Pulse radar level measurement
Frequency	C-band, approx. 6 GHz
Measuring range	0.3 ... 20 m (1.0 ... 65 ft)
Output	
Analog output	4 ... 20 mA
Accuracy	± 0.02 mA
Span	Proportional or inversely proportional
Communications	HART
Performance (reference conditions)	
Accuracy	± the greater of 0.1 % of range or 10 mm (0.4 inch)
• From end of antenna to 600 mm (23.62 inch)	40 mm (1.57 inch)
• Remainder of range 10 mm (0.4 inch) or 0.1 % of span (whichever is greater)	10 mm (0.4 inch) or 0.1 % of span (whichever is greater)
Influence of ambient temperature	0.003 %/K
Repeatability	± 5 mm (2 inch)
Fail-safe	mA signal programmable as high, low or hold (LOE)
Rated operating conditions	
Installation conditions	
• Location	Indoor/outdoor
Ambient conditions (enclosure)	
• Ambient temperature	-40 ... +80 °C (-40 ... +176 °F)
• Storage temperature	-40 ... +80 °C (-40 ... +176 °F)
• Installation category	I
• Pollution degree	4
Medium conditions	
Dielectric constant ε_r	> 3.0
Vessel temperature	-40 ... +80 °C (-40 ... +176 °F)
Vessel pressure	3 bar g (43.5 psi g)
Design	
Enclosure	
• Body construction	PBT (Polybutylene Terephthalate)
• Lid construction	PEI (Polyether Imide)
• Cable inlet	2 x M20 x 1.5 or 2 x ½" NPT with adapter
Degree of protection	Type 4X/NEMA 4X, Type 6/NEMA 6, IP67, IP68
Weight	1.97 kg (4.35 lb)
Antenna	
• Material	Polypropylene rod, hermetically sealed construction
• Dimensions	Standard 100 mm (4 inch) shield for maximum 100 mm (4 inch) nozzle or optional 250 mm (10 inch) long shield
Process connections	1½" NPT [(Taper), ANSI/ASME B1.20.1] R 1½" [(BSPT), EN 10226] G 1½" [(BSPP), EN ISO 228-1]

Power supply	• Nominal 24 V DC with max. 550 Ω, maximum 30 V DC • 4 ... 20 mA
Certificates and approvals	
General	$CSA_{US/C}$, CE, FM, RCM
Marine	• Lloyd's Register of Shipping • ABS Type Approval
Radio	FCC, Industry Canada, RED, RCM
Hazardous	
• Intrinsically Safe (Brazil)	INMETRO Ex ia IIC T4 Ga
• Intrinsically Safe (Canada)	CSA Class I, Div. 1, Groups A, B, C, D; Class II, Div. 1, Group G; Class III
• Intrinsically Safe (Europe)	ATEX II 1G EEx ia IIC T4
• Intrinsically Safe (International)	IECEx Ex ia IIC T4
• Intrinsically Safe (Russia/Kazakhstan)	EAC Ex ia
• Intrinsically Safe (USA)	FM Class I, Div. 1, Groups A, B, C, D; Class II, Div. 1, Groups E, F, G; Class III
Programming	
Handheld programmer	HART communicator 375
PC	SIMATIC PDM
Intrinsically safe Siemens handheld programmer (optional)	Infrared receiver
• Approvals (handheld programmer)	ATEX II 1G EEx ia IIC T4 CSA and FM Class I, Div. 1, Groups A, B, C, D, T6 at max. ambient
Display (local)	Multi-segment alphanumeric liquid crystal with bar graph (representing level) available in four languages

© Siemens 2020

Selection and ordering data

	Article No.
SITRANS Probe LR Radar level transmitter ↗	**7ML5430-**
Continuous, non-contact, 20 m (66 ft) range, for liquids and slurries.	■ ■ ■ ■ **0**
↗ Click on the Article No. for the online configuration in the PIA Life Cycle Portal.	
Enclosure/Cable inlet	
Plastic, (PBT), 2 x ½" NPT	**1**
Plastic, (PBT), 2 x M20 x 1.5	**2**
Antenna type/Material - (max. 3 bar and 80 °C)	
Polypropylene antenna	
1½" NPT [(Taper), ANSI/ASME B1.20.1], comes with integral 100 mm shield	**A**
R 1½" [(BSPT), EN 10226], comes with integral 100 mm shield	**B**
G 1½" [(BSPP), EN ISO 228-1], comes with integral 100 mm shield	**C**
1½" NPT [(Taper), ANSI/ASME B1.20.1], comes with integral 250 mm shield	**D**
R 1½" [(BSPT), EN 10226], comes with integral 250 mm shield	**E**
G 1½" [(BSPP), EN ISO 228-1], comes with integral 250 mm shield	**F**
Approvals	
General Purpose, CE, RED, RCM	**A**
General Purpose, $CSA_{us/c}$, FM, FCC	**B**
CSA Class I, Div. 1, Groups A, B, C, D, Class II, Div. 1, Group G, Class III, FCC, Intrinsically Safe	**C**
FM, Class I, II and III, Div. 1, Groups A, B, C, D, E, F, G, FCC, Intrinsically Safe	**D**
IECEx Ex ia IIC T4; ATEX II 1G EEx ia IIC T4, RED, RCM, Intrinsically Safe; INMETRO Ex ia IIC T4 Ga; EAC	**E**
Communication/Output	
4 ... 20 mA, HART	**1**

	Order code
Further designs	
Please add "**-Z**" to Article No. and specify Order code(s).	
Stainless steel tag [69 x 50 mm (2.71 x 1.97 inch)]: Measuring-point number/identification (max. 27 characters) specify in plain text	**Y15**
Manufacturer's test certificate:M to DIN 55350, Part 18 and to ISO 9000	**C11**
Operating Instructions	
All literature is available to download for free, in a range of languages, at	
http://www.siemens.com/processinstrumentation/documentation	
Accessories	Article No.
Handheld programmer, Intrinsically Safe, ATEX II 1G, Ex ia	**7ML5830-2AH**
HART modem/USB (for use with a PC and SIMATIC PDM)	**7MF4997-1DB**
One metallic cable gland M20 x 1.5, rated -40 ... +80 °C (-40 ... +176 °F)	**7ML1930-1AP**
SITRANS RD100, loop powered display - see Chapter 7	**7ML5741-.....-.**
SITRANS RD150, remote digital display for 4 ... 20 mA and HART devices - see Chapter 7	**7ML5742-.....-....**
SITRANS RD200, universal input display with Modbus conversion - see Chapter 7	**7ML5740-.....-..**
SITRANS RD300, dual line display with totalizer and linearization curve and Modbus conversion - see Chapter 7	**7ML5744-.....-..**
For applicable back up point level switch - see point level measurement section	
Spare parts	
Plastic lid	**7ML1830-1KB**
For applicable back up point level switch - see point level measurement section	

© Siemens 2020

Dimensional drawings

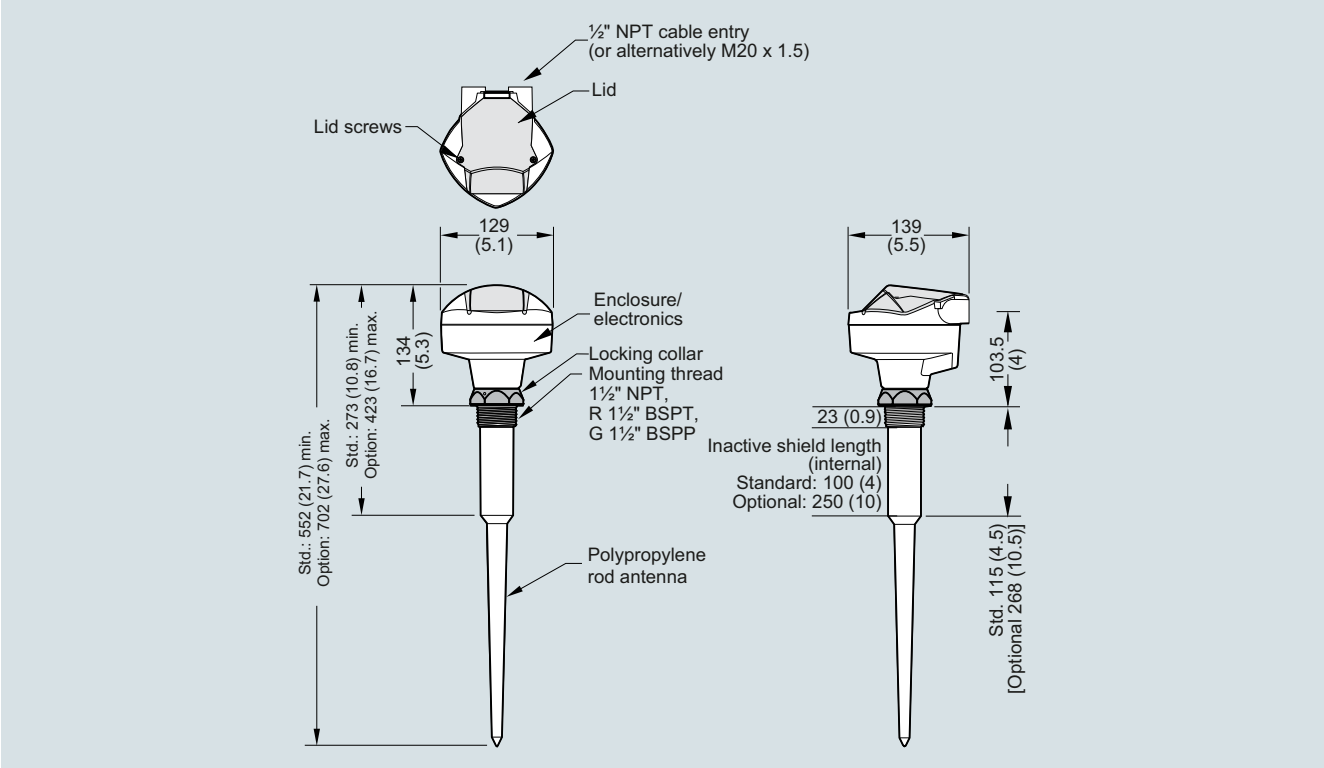

SITRANS Probe LR, dimensions in mm (inch)

Circuit diagrams

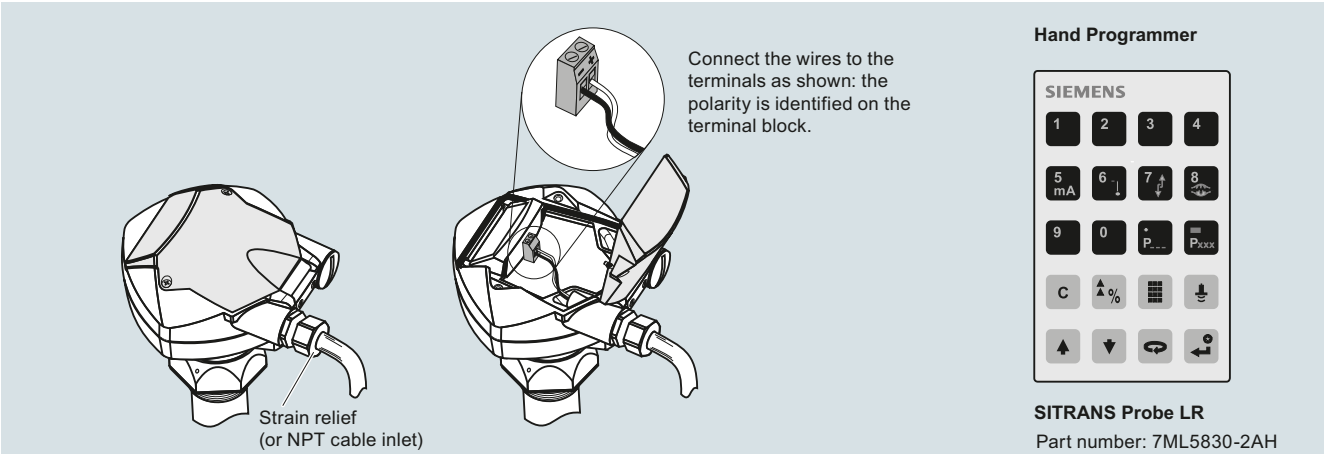

SITRANS Probe LR
Part number: 7ML5830-2AH

Notes:

- DC terminal shall be supplied from an SELV source in accordance with IEC-1010-1 Annex H.
- All field wiring must have insulation suitable for rated input voltages.
- Use shielded twisted pair cable (14-22 AWG).
- Separate cables and conduit may be required to conform to standard instrumentation wiring practices or electrical codes.

SITRANS Probe LR connections

© Siemens 2020

SITRANS LR100

Overview

SITRANS LR100 is a 2 wire loop powered radar transmitter for continuous level measurement of liquids and slurries to a range of 8 m (26 ft).

Benefits

- Bluetooth connectivity for easy setup with SITRANS mobile IQ
- Chemically resistant PVDF enclosure
- W band FMCW radar yields narrow beam with small antenna for superior performance in short range applications
- Approved for open air applications outside of a tank
- Compact design fits in limited space installations

Application

SITRANS LR100 is a W band FMCW radar level transmitter, packaged in a hermetically sealed PVDF enclosure for years of trouble-free reliable measurement service.

4 to 20 mA loop powered, it provides accurate level measurement to ranges of 8 m (26 ft). Measurement is possible non-intrusively through plastic vessel tops for easy installation. Programming is convenient using the Bluetooth connection and SITRANS mobile IQ application on your smart device.

Technical specifications

Mode of operation	
Measuring principle	W band FMCW radar
Measuring range	0 ... 8 m (0 ... 26 ft)
Frequency	80 GHz nominal
Beam angle	8°
Power Supply	
Voltage	12 ... 35 V DC
Current	4 ... 20 mA
Accuracy	± 5 mm
Rated operating conditions	
Vessel pressure	-1 ... +3 bar (14.50 ... 43.51 psi g)
Ambient temperature	-40 ... +60 °C (-40 ... +140 °F)
Process temperature	-40 ... +60 °C (-40 ... +140 °F)
Storage temperature	-40 ... +80 °C (-40 ... +176 °F)
Design	
Weight	0.5 kg (1.1 lb), plus 0.1 kg/m (0.2 lb/ft) cable length
Material (enclosure)	PVDF
Process connection	1-½" NPT, 1-½" BSPT, or 1-½" BSPP
Degree of protection	IP66/IP68
Cable connection	• 8 m (26 ft) long, 2 conductor, twisted with shield 18 AWG, PVC jacket • 1" NPT or 1" BSPT threaded connection
Certificates and approvals	Ordinary locations, CE, $_C$FM$_{US}$, $_C$CSA$_{US}$, RCM, FCC, Industry Canada
Programming	
SITRANS mobile IQ App	SITRANS mobile IQ is a Bluetooth app that provides an intuitive interface to quickly configure, set up and monitor SITRANS LR100 series. For more information: http://www.siemens.com/mobileIQ

© Siemens 2020

Selection and ordering data

	Article No.
SITRANS LR100 Radar level transmitter ↗	**7ML530**
Continuous, non-contact, 8 m (26 ft) range, for liquids and slurries, 8 m integrated cable connection	**7 - 1 B 7 0 6 - 0 A A 0**
↗ Click on the Article No. for the online configuration in the PIA Life Cycle Portal.	
Process connection	
1-½" NPT [(Taper), ASME B1.20.1]/electrical connection 1" NPT	**A**
R 1-½" [(BSPT), EN 10226]/electrical connection 1" BSPT	**B**
G 1-½" [(BSPP), EN ISO 228-1]/electrical connection 1" BSPT	**C**
Further designs	Order code
Please add "**-Z**" to Article No. and specify Order code(s).	
Tag (device parameter, max. 32 characters) plate stainless steel 304/1.4301	**Y15**
Operating Instructions	
All literature is available to download for free, in a range of languages, at	

http://www.siemens.com/processinstrumentation/documentation

Accessories	Article No.
Easy Aimer 2, aluminum, NPT with ¾" x 1" PVC coupling	**7ML1830-1AQ**
Easy Aimer 2, aluminum with M20 adapter and 1" and 1½" BSPT aluminum couplings	**7ML1830-1AX**
Easy Aimer 304, NPT with 1" stainless steel coupling	**7ML1830-1AU**
Easy Aimer 304, with M20 adapter and 1" and 1½" BSPT 304 stainless steel couplings	**7ML1830-1GN**
FMS-200 universal box bracket, mounting kit	**7ML1830-1BK**
FMS-210 channel bracket, wall mount	**7ML1830-1BL**
FMS-220 extended channel bracket, wall mount	**7ML1830-1BM**
FMS-310 channel bracket, floor mount	**7ML1830-1BN**
FMS-320 extended channel bracket, floor mount	**7ML1830-1BP**
FMS-350 bridge channel bracket, floor mount (see Mounting Brackets on page 4/186 for more information)	**7ML1830-1BQ**
1" NPT locknut, plastic	**7ML1830-1DS**
1" BSP locknut, plastic	**7ML1830-1DR**
Plastic adapter 1" BSP - 20 mm	**7ML1830-1EA**
Plastic adapter 1" NPT	**7ML1930-1FX**
Plastic adapter 1" NPT/M20	**7ML1830-1EF**
SIMATIC RTU3010C compact, remote data manager with alarming	**6NH3112-0BA00-0XX0**
SIMATIC RTU3030C compact, remote data manager with alarming	**6NH3112-3BA00-0XX0**
SITRANS RD100, loop powered display - see Chapter 7	**7ML5741-.....-.**
SITRANS RD150, remote digital display for 4 to 20 mA and HART devices - see Chapter 7	**7ML5742-.....-....**
SITRANS RD200, universal input display with Modbus conversion - see Chapter 7	**7ML5740-.....-..**
SITRANS RD300, dual line display with totalizer and linearization curve and Modbus conversion - see Chapter 7	**7ML5744-.....-..**
For applicable back up point level switch - see point level measurement section	

Dimensional drawings

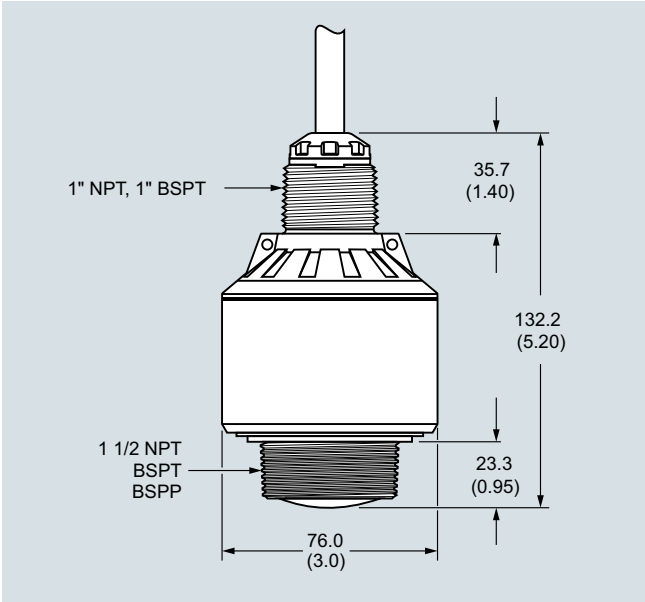

SITRANS LR100, dimensions in mm (inch)

Circuit diagrams

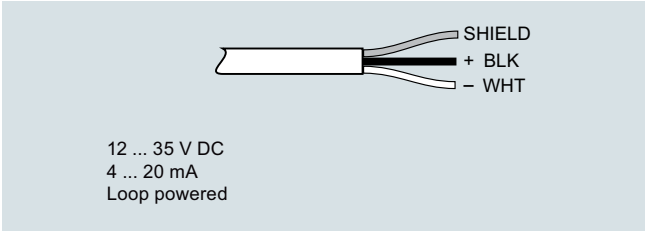

SITRANS LR100 connections

© Siemens 2020

Overview

SITRANS LR110 is a compact radar transmitter for continuous level measurement of liquids, slurries, or solids to a range of 15 m (49.2 ft).

Benefits

- Bluetooth connectivity for easy setup with SITRANS mobile IQ
- Chemically resistant PVDF enclosure
- HART 7.0 or Modbus RTU (in preparation) communication for intelligent integration into your application
- W band FMCW radar yields narrow beam with small antenna for superior performance in short range applications
- Approved for open air applications outside of a tank
- 2 mm accuracy and zero near range distance yields optimum inventory management capability
- Compact design fits in limited space installations
- Hazardous area variants available for safe use in explosive gas or dust environments.

Application

SITRANS LR110 is a W band FMCW radar level transmitter, packaged in a hermetically sealed PVDF enclosure for years of trouble-free reliable measurement service.

4 to 20 mA loop powered with HART [optional 4-wire Modbus RTU (in preparation)], providing accurate level measurement to ranges of 15 m (49.2 ft). Measurement is possible non-intrusively through plastic vessel tops for easy installation. Programming is convenient using the Bluetooth connection and SITRANS mobile IQ application on your smart device.

Technical specifications

Mode of operation	
Measuring principle	W band FMCW radar
Measuring range	0 ... 15 m (0 ... 49.2 ft)
Frequency	80 GHz nominal
Beam angle	8°
Power Supply	
HART	
• Voltage	12 ... 35 V DC
• Current	4 ... 20 mA
Modbus (in preparation)	
• Voltage	8 … 30 V DC
• Current	38 mA at 8 V DC/17 mA at 30 V DC
Communications	
4 ... 20 mA	HART 7.0
Modbus (4-wire option) (in preparation)	RTU
Accuracy	± 2 mm (range 0.25 ... 015 m), ± 10 mm (range 0 ... 0.25 m)
Rated operating conditions	
Vessel pressure	-1 ... +3 bar (14.50 ... 43.51 psi g)
Ambient temperature	-40 ... +80 °C (-40 ... +176 °F)
Process temperature	-40 ... +80 °C (-40 ... +176 °F)
Storage temperature	-40 ... +80 °C (-40 ... +176 °F)
Design	
Weight	0.5 kg (1.1 lb), plus 0.1 kg/m (0.2 lb/ft) cable length
Material (enclosure)	PVDF
Process connection	1-½" NPT, 1-½" BSPT or 1-½" BSPP
Degree of protection	IP66/IP68
Cable connection	1" NPT or 1" BSPT threaded connection
• HART	Length options: 5 ... 100 m (16.4 ... 328.1 ft), 2 conductor, twisted with shield 18 AWG, PVC jacket
• Modbus version (in preparation)	Length options: 5 ... 100 m (16.4 ... 328.1 ft), 4 conductor, twisted pairs, 22 AWG, polyurethane jacket
Certificates and approvals	CE, $_C$FM$_{US}$, $_C$CSA$_{US}$, ATEX, IECEx, RCM, FCC, Industry Canada, INMETRO, NEPSI, FDA/(EG)1935/2004
Programming	
SITRANS mobile IQ App	SITRANS mobile IQ is a Bluetooth app that provides an intuitive interface to quickly configure, set up and monitor SITRANS LR100 series. For more information: http://www.siemens.com/mobileIQ
SIMATIC PDM	SIMATIC PDM allows for remote PC configuration and diagnostics (for installation on a network).

© Siemens 2020

Selection and ordering data

	Article No.												
SITRANS LR110 Radar level transmitter ↗	**7ML531-**												
Continuous, non-contact, 15 m (49.2 ft) range, for liquids, slurries, or solids, integrated cable connection	■	-	■	■	■	0	6	-	0	-	A	0
↗ Click on the Article No. for the online configuration in the PIA Life Cycle Portal.													
Communications													
HART (4 ... 20 mA)	0												
Bluetooth function													
Disabled			0										
Enabled			1										
Cable length													
5 m				A									
10 m				B									
30 m				C									
50 m				D									
100 m				E									
Process connection													
1-½" NPT [(Taper), ASME B1.20.1]/ electrical connection 1" NPT					A								
R 1-½" [(BSPT), EN 10226]/ electrical connection 1" BSPT					B								
G 1-½" [(BSPP), EN ISO 228-1]/electrical connection 1" BSPT					C								
Type of protection													
Non Ex (ordinary locations/Class I, Div. 1) CE, $_C$FM$_{US}$, $_C$CSA$_{US}$, RCM[2]										A			
Ex i (ia) (Gas Ex-Zone 0/Class 1, Div. 1) Dust Ex-Zone 20, 21, Class II & III Div. 1[1]										B			
Ex Zone 1, ½, Zone 21, 22, (Class I, Div. 2), Class II & III, Div. 2 via encapsulation [3]										G			

	Order code
Further designs	
Please add "**-Z**" to Article No. and specify Order code(s).	
Tag (device parameter, max. 32 characters) plate stainless steel 304/1.4301	**Y15**
$_C$FM$_{US}$, $_C$CSA$_{US}$, ATEX, IECEx	**E49**
INMETRO[4]	**E25**
NEPSI	**E27**
ATEX, IECEx	**E47**
WHG and Vlaren	**E61**
Operating Instructions	
All literature is available to download for free, in a range of languages, at	
http://www.siemens.com/processinstrumentation/documentation	

Accessories	Article No.
Easy Aimer 2, aluminum, NPT with ¾" x 1" PVC coupling	**7ML1830-1AQ**
Easy Aimer 2, aluminum with M20 adapter and 1" and 1½" BSPT aluminum couplings	**7ML1830-1AX**
Easy Aimer 304, NPT with 1" stainless steel coupling	**7ML1830-1AU**
Easy Aimer 304, with M20 adapter and 1" and 1½" BSPT 304 stainless steel couplings	**7ML1830-1GN**
FMS-200 universal box bracket, mounting kit	**7ML1830-1BK**
FMS-210 channel bracket, wall mount	**7ML1830-1BL**
FMS-220 extended channel bracket, wall mount	**7ML1830-1BM**
FMS-310 channel bracket, floor mount	**7ML1830-1BN**
FMS-320 extended channel bracket, floor mount	**7ML1830-1BP**
FMS-350 bridge channel bracket, floor mount (see Mounting Brackets on page 4/186 for more information)	**7ML1830-1BQ**
1" NPT locknut, plastic	**7ML1830-1DS**
1" BSP locknut, plastic	**7ML1830-1DR**
Plastic adapter 1" BSP - 20 mm	**7ML1830-1EA**
Plastic adapter 1" NPT	**7ML1930-1FX**
Plastic adapter 1" NPT/M20	**7ML1830-1EF**
SIMATIC RTU3010C compact, remote data manager with alarming	**6NH3112-0BA00-0XX0**
SIMATIC RTU3030C compact, remote data manager with alarming	**6NH3112-3BA00-0XX0**
Intrinsically Safe barrier	**7NG4124-1AA00**
SITRANS RD100, loop powered display - see Chapter 7	**7ML5741-.....-.**
SITRANS RD150, remote digital display for 4 to 20 mA and HART devices - see Chapter 7	**7ML5742-.....-....**
SITRANS RD200, universal input display with Modbus conversion - see Chapter 7	**7ML5740-.....-..**
SITRANS RD300, dual line display with totalizer and linearization curve and Modbus conversion - see Chapter 7	**7ML5744-.....-..**
For applicable back up point level switch - see point level measurement section	

[1] Must be ordered in combination with order codes E49, E25, E27, or E47.
[2] Cannot be ordered in combination with order codes E49, E25, E27, or E47.
[3] Available only with Order code E47.
[4] MASC approval is also included when ordered with Type of protection option G.

© Siemens 2020

Dimensional drawings

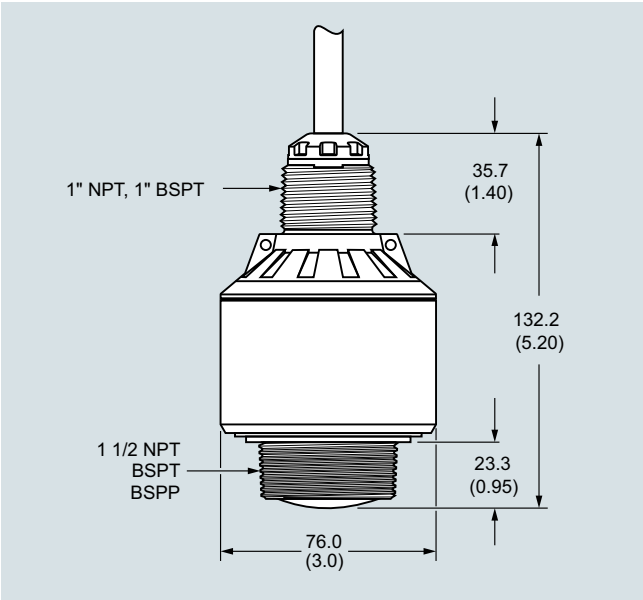

SITRANS LR110, dimensions in mm (inch)

Circuit diagrams

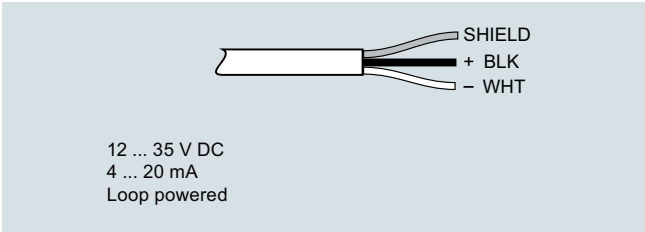

SITRANS LR120 Connections

© Siemens 2020

Overview

SITRANS LR120 is a compact radar transmitter for continuous level measurement of liquids and solids to a range of 30 m (98.4 ft).

Benefits

- Bluetooth connectivity for easy setup with SITRANS mobile IQ
- Chemically resistant PVDF enclosure
- HART 7.0 or Modbus RTU (in preparation) communication for intelligent integration into your application
- W band FMCW radar yields narrow beam with small antenna for superior performance in applications with obstructions
- Approved for open air applications outside of a tank
- 2 mm accuracy and zero near range distance yields optimum inventory management capability
- Submergence shield accessory prevents build up on sensor during flooding conditions
- Hazardous area variants available for safe use in explosive gas or dust environments

Application

SITRANS LR120 is a W band FMCW radar level transmitter, packaged in a hermetically sealed PVDF enclosure for years of trouble-free reliable measurement service.

4 to 20 mA loop powered with HART [optional 4-wire Modbus RTU (in preparation)], providing accurate level measurement to ranges of 30 m (98.4 ft). Its long range, narrow beam make LR120 suitable for wet wells with obstructions or solids level measurement, for example aggregates or plastic pellets. Programming is convenient using the Bluetooth connection and SITRANS mobile IQ application on your smart device.

Technical specifications

Mode of operation	
Measuring principle	W band FMCW radar
Measuring range	0 ... 30 m (0 ... 98.4 ft)
Frequency	80 GHz nominal
Beam angle	4°
Power Supply	
HART	
• Voltage	12 ... 35 V DC
• Current	4 ... 20 mA
Modbus (in preparation)	
• Voltage	8 … 30 V DC
• Current	38 mA at 8 V DC/17 mA at 30 V DC
Communications	
4 ... 20 mA	HART 7.0
Modbus (4-wire option) (in preparation)	RTU
Accuracy	± 2 mm (range 0.25 ... 30 m), ± 10 mm (range 0 ... 0.25 m)
Rated operating conditions	
Vessel pressure	-1 ... +3 bar (14.50 ... 43.51 psi g)
Ambient temperature	-40 ... +80 °C (-40 ... +176 °F)
Process temperature	-40 ... +80 °C (-40 ... +176 °F)
Storage temperature	-40 ... +80 °C (-40 ... +176 °F)
Design	
Weight	0.7 kg (1.5 lb), plus 0.1 kg/m (0.2 lb/ft) cable length
Material	
• Enclosure	PVDF
• Submergence shield	• Polypropylene • Silicone O-ring
Degree of protection	IP66/IP68
Cable connection	1" NPT or 1" BSPT threaded connection
• HART	Length options: 5 ... 100 m (16.4 ... 328.1 ft), 2 conductor, twisted with shield 18 AWG, PVC jacket
• Modbus version (in preparation)	Length options: 5 ... 100 m (16.4 ... 328.1 ft), 4 conductor, twisted pairs, 22 AWG, polyurethane jacket
Certificates and approvals	CE, $_C$FM$_{US}$, $_C$CSA$_{US}$, ATEX, IECEx, RCM, FCC, Industry Canada, INMETRO, NEPSI, FDA/(EG)1935/2004
Programming	
SITRANS mobile IQ app	SITRANS mobile IQ is a Bluetooth app that provides an intuitive interface to quickly configure, set up and monitor SITRANS LR100 series. For more information: http://www.siemens.com/mobileIQ
SIMATIC PDM	SIMATIC PDM allows for remote PC configuration and diagnostics (for installation on a network).

© Siemens 2020

Selection and ordering data

	Article No.
SITRANS LR120 Radar level transmitter ↗	**7ML532-**
Continuous, non-contact, 30 m (98.4 ft) range, for liquids, slurries, and solids, integrated cable connection	■ - ■ ■ A 0 6 - 0 ■ ■ 0
↗ Click on the Article No. for the online configuration in the PIA Life Cycle Portal.	
Communications	
HART (4 ... 20 mA)	0
Bluetooth function	
Disabled	0
Enabled	1
Cable length	
5 m	A
10 m	B
30 m	C
50 m	D
100 m	E
Type of protection	
Non Ex (ordinary locations) $_C$FM$_{US}$, $_C$CSA$_{US}$, CE, RCM[2]	A
Ex i (ia) (Gas Ex-Zone 0/Class I, Div. 1) Dust Ex-Zone 20, 21, Class II & III Div. 1[1]	B
Ex Zone 1, ½, 2, Zone 21, 22, via encapsulation[3]	G
Electrical connection of the cable entry	
1" BSPT	H
1" NPT	P

	Order code
Further designs	
Please add "**-Z**" to Article No. and specify Order code(s).	
Tag (device parameter, max. 32 characters) plate stainless steel 304/1.4301	**Y15**
$_C$FM$_{US}$, $_C$CSA$_{US}$, ATEX, IECEx	**E49**
INMETRO[4]	**E25**
NEPSI	**E27**
ATEX, IECEx	**E47**
WHG and Vlarem	**E61**
Operating Instructions	
All literature is available to download for free, in a range of languages, at	
http://www.siemens.com/processinstrumentation/documentation	

Accessories	Article No.
Submergence shield kit	**A5E49069764**
Easy Aimer 2, aluminum, NPT with ¾" x 1" PVC coupling	**7ML1830-1AQ**
Easy Aimer 2, aluminum with M20 adapter and 1" and 1½" BSPT aluminum couplings	**7ML1830-1AX**
Easy Aimer 304, NPT with 1" stainless steel coupling	**7ML1830-1AU**
Easy Aimer 304, with M20 adapter and 1" and 1½" BSPT 304 stainless steel couplings	**7ML1830-1GN**
FMS-200 universal box bracket, mounting kit	**7ML1830-1BK**
FMS-210 channel bracket, wall mount	**7ML1830-1BL**
FMS-220 extended channel bracket, wall mount	**7ML1830-1BM**
FMS-310 channel bracket, floor mount	**7ML1830-1BN**
FMS-320 extended channel bracket, floor mount	**7ML1830-1BP**
FMS-350 bridge channel bracket, floor mount (see Mounting Brackets on page 4/186 for more information)	**7ML1830-1BQ**
1" NPT locknut, plastic	**7ML1830-1DS**
1" BSP locknut, plastic	**7ML1830-1DR**
Plastic adapter 1" BSP - 20 mm	**7ML1830-1EA**
Plastic adapter 1" NPT	**7ML1930-1FX**
Plastic adapter 1" NPT/M20	**7ML1830-1EF**
SIMATIC RTU3010C compact, remote data manager with alarming	**6NH3112-0BA00-0XX0**
SIMATIC RTU3030C compact, remote data manager with alarming	**6NH3112-3BA00-0XX0**
Intrinsically Safe barrier	**7NG4124-1AA00**
SITRANS RD100, loop powered display - see Chapter 7	**7ML5741-.....-.**
SITRANS RD150, remote digital display for 4 to 20 mA and HART devices - see Chapter 7	**7ML5742-.....-....**
SITRANS RD200, universal input display with Modbus conversion - see Chapter 7	**7ML5740-.....-..**
SITRANS RD300, dual line display with totalizer and linearization curve and Modbus conversion - see Chapter 7	**7ML5744-.....-..**
For applicable back up point level switch - see point level measurement section	

1) Must be ordered in combination with order codes E49, E25, E27, or E47.
2) Not available in combination with order codes E49, E25, E27, or E47.
3) Available only with Order code E47.
4) MASC approval is also included when ordered with Type of protection option G.

© Siemens 2020

Dimensional drawings

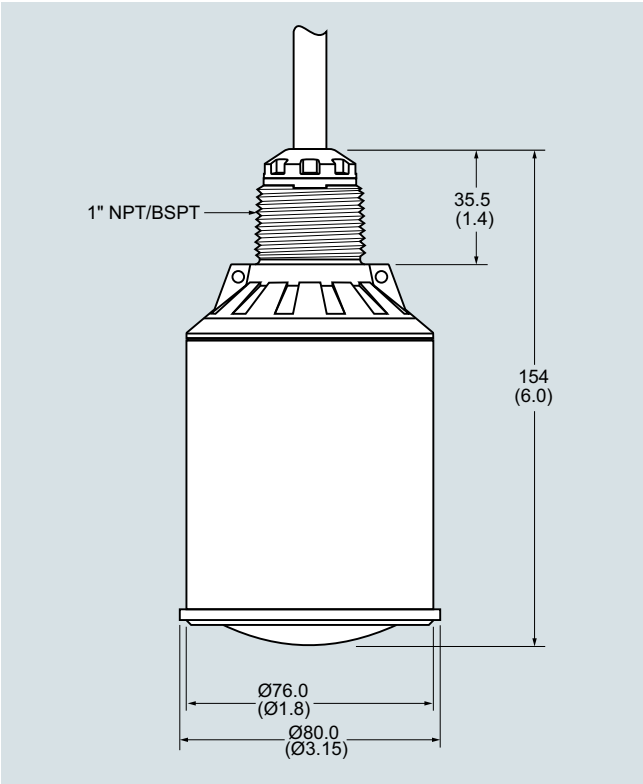

SITRANS LR120, dimensions in mm (inch)

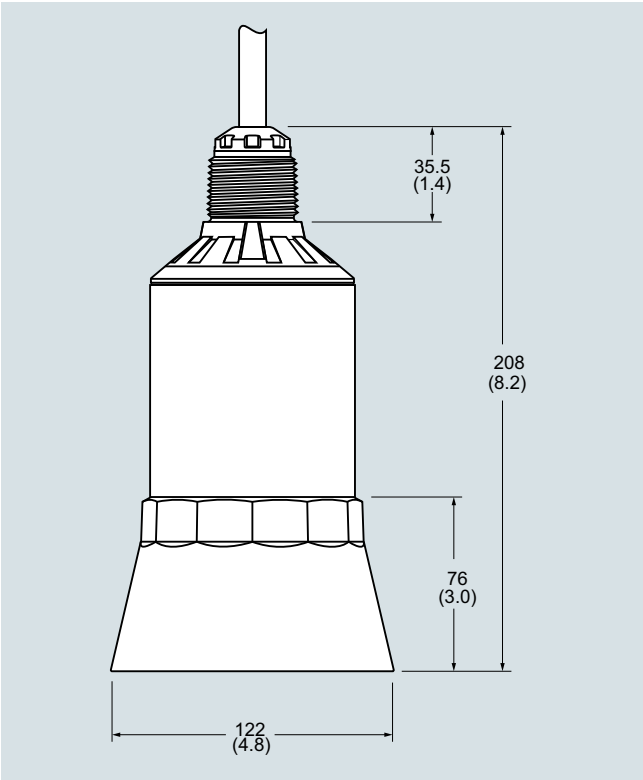

SITRANS LR120 Submergence shield accessory, dimensions in mm (inch)

Circuit diagrams

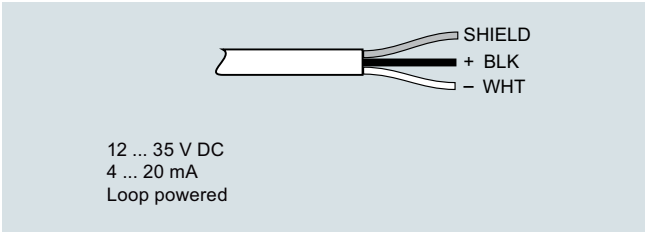

SITRANS LR120 Connections

© Siemens 2020

Overview

SITRANS LR140 is a 2 wire loop powered radar transmitter for continuous level measurement of liquids and slurries to a range of 8 m (26 ft).

Benefits

- Bluetooth connectivity for easy setup with SITRANS mobile IQ.
- Chemically resistant PVDF sensor.
- W band FMCW radar yields narrow beam with small antenna for superior performance in short range applications.
- Approved for open air applications outside of a tank.
- Compact design fits in limited space installations.

Application

SITRANS LR140 is a W band FMCW radar level transmitter, packaged in a chemically resistant enclosure with PVDF sensor for years of trouble-free reliable measurement service.

4 to 20 mA loop powered, it provides accurate level measurement to ranges of 8 m (26 ft). Measurement is possible, non-intrusively, through plastic vessel tops for easy installation. Programming is convenient using the Bluetooth connection and SITRANS mobile IQ application on your smart device.

Technical specifications

Mode of operation	
Measuring principle	W band FMCW radar
Measuring range	0 ... 8 m (0 ... 26 ft)
Frequency	80 GHz nominal
Beam angle	8°
Power Supply	
Voltage	12 ... 35 V DC
Current	4 ... 20 mA
Accuracy	± 5 mm
Rated operating conditions	
Vessel pressure	-1 ... +3 bar (14.50 ... 43.51 psi g)
Ambient temperature	-40 ... +60 °C (-40 ... +140 °F)
Process temperature	-40 ... +60 °C (-40 ... +140 °F)
Storage temperature	-40 ... +80 °C (-40 ... +176 °F)

Technical specifications (continued)

Design	
Weight	0.5 kg (1.1 lb), plus 0.1 kg/m (0.2 lb/ft) cable length
Material (sensor)	PVDF
Material (enclosure)	PBT
Process connection	1-½" NPT, 1-½" BSPT, or 1-½" BSPP
Degree of protection	IP66/IP67
Certificates and approvals	General Purpose, CE
Programming	
SITRANS mobile IQ App	SITRANS mobile IQ is a Bluetooth app that provides an intuitive interface to quickly configure, set up and monitor SITRANS LR100 series. For more information: http://www.siemens.com/mobileIQ

Selection and ordering data

	Article No.
SITRANS LR140 Radar level transmitter ↗ Non-contact, 8 m (26.2 ft) range, for liquids and solids.	**7ML533**
	7 - 1 A ■ 0 7 - 4 A ■ 0
↗ Click on the Article No. for the online configuration in the PIA Life Cycle Portal.	
Process connection	
1-½" NPT	**A**
R 1-½" (BSPT)	**B**
G 1-½" (BSPP)	**C**
Electrical connections/Cable entry	
M20	**F**
½" NPT	**K**

Further designs	Order code
Please add "**-Z**" to Article No. and specify Order code(s).	
Tag (device parameter, max. 32 characters) plate stainless steel 304/1.4301	**Y15**
Operating Instructions	
All literature is available to download for free, in a range of languages, at	

http://www.siemens.com/processinstrumentation/documentation

Accessories	Article No.
SIMATIC RTU3010C compact, remote data manager with alarming	**6NH3112-0BA00-0XX0**
SIMATIC RTU3030C compact, remote data manager with alarming	**6NH3112-3BA00-0XX0**
SITRANS RD100, loop powered display - see Chapter 7	**7ML5741-.....-.**
SITRANS RD150, remote digital display for 4 to 20 mA and HART devices - see Chapter 7	**7ML5742-.....-....**
SITRANS RD200, universal input display with Modbus conversion - see Chapter 7	**7ML5740-.....-..**
SITRANS RD300, dual line display with totalizer and linearization curve and Modbus conversion - see Chapter 7	**7ML5744-.....-..**
For applicable back up point level switch - see point level measurement section	

© Siemens 2020

Dimensional drawings

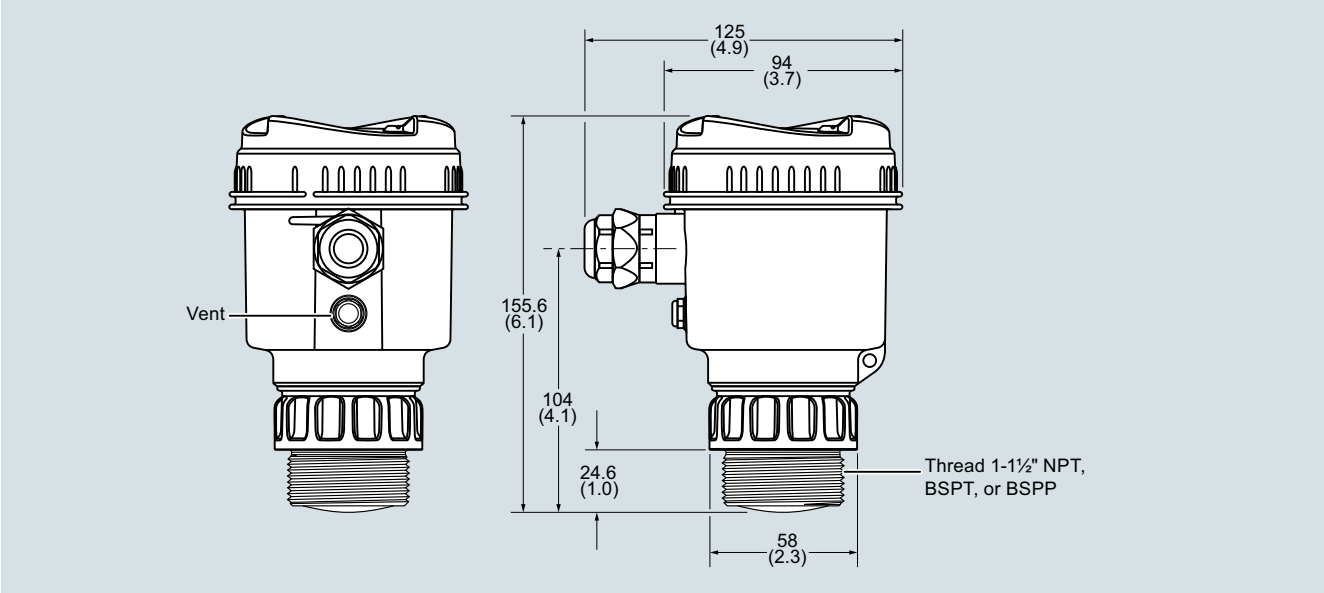

SITRANS LR140, dimensions in mm (inch)

Circuit diagrams

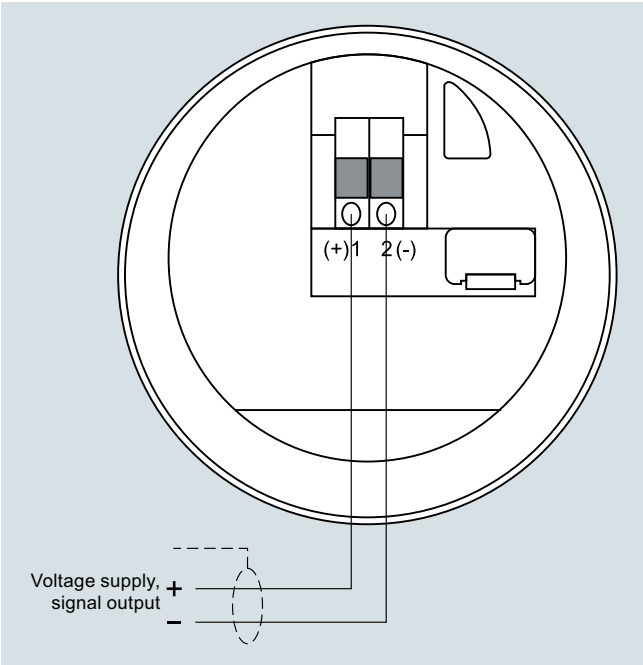

SITRANS LR140 connections

© Siemens 2020

SITRANS LR150

Overview

SITRANS LR150 is a compact radar transmitter for continuous level measurement of liquids, slurries, and solids to a range of 15 m (49.2 ft).

Benefits

- Bluetooth connectivity for easy setup with SITRANS mobile IQ.
- Optional HMI with pushbutton programming and local diagnostic data.
- Chemically resistant PVDF sensor.
- HART 7.0 communication for intelligent integration into your application.
- W band FMCW radar yields narrow beam with small antenna for superior performance in short range applications.
- Approved for open air applications outside of a tank.
- 2 mm accuracy and zero near range distance yields optimum inventory management capability.
- Compact design fits in limited space installations.
- Hazardous area variants available for safe use in explosive gas or dust environments (pending).

Application

SITRANS LR150 is a W band FMCW radar level transmitter, with a chemically resistant PVDF sensor, for years of trouble-free, reliable measurement service.

4 to 20 mA loop powered with HART, providing accurate level measurement to ranges of 15 m (49.2 ft). Measurement is possible, non-intrusively, through plastic vessel tops for easy installation. Programming is convenient using the Bluetooth connection and SITRANS mobile IQ application on your smart device or locally with an optional HMI.

Technical specifications

Mode of operation	
Measuring principle	W band FMCW radar
Measuring range	0 ... 15 m (0 ... 49.2 ft)
Frequency	80 GHz nominal
Beam angle	8°
Power Supply	
HART	
• Voltage	12 ... 35 V DC
• Current	4 ... 20 mA
Communications	
4 ... 20 mA	HART 7.0
Accuracy	± 2 mm
Rated operating conditions	
Vessel pressure	-1 ... +3 bar (14.50 ... 43.51 psi g)
Ambient temperature	-40 ... +70 °C (-40 ... +158 °F)
Process temperature	-40 ... +70 °C (-40 ... +158 °F)
Storage temperature	-40 ... +80 °C (-40 ... +176 °F)
Design	
Weight	0.5 kg (1.1 lb)
Material (sensor)	PVDF
Material (enclosure)	PBT
Process connection	1-½" NPT, 1-½" BSPT or 1-½" BSPP
Degree of protection	IP66/IP67
Cable inlet	M20 or ½" NPT
Certificates and approvals	CE
Programming	
SITRANS mobile IQ App	SITRANS mobile IQ is a Bluetooth app that provides an intuitive interface to quickly configure, set up and monitor SITRANS LR100 series (available for Android, Apple and Windows devices). For more information: http://www.siemens.com/mobileIQ
Optional HMI	4 button with display of variables and diagnostic data
SIMATIC PDM	SIMATIC PDM allows for remote PC configuration and diagnostics (for installation on a network).

© Siemens 2020

Selection and ordering data

	Article No.											
SITRANS LR150 Radar level transmitter ↗	**7ML534**											
Non-contact, 15 m (49.2 ft) range, for liquids and solids.	**0**	**-**	■	**A**	■	**0**	**7**	**-**	**4**	■	■	■
↗ Click on the Article No. for the online configuration in the PIA Life Cycle Portal.												
Bluetooth function												
Disabled			**0**									
Enabled			**1**									
Process connection												
1-½" NPT					**A**							
R 1-½" (BSPT)					**B**							
G 1-½" (BSPP)					**C**							
Type of protection												
Non Ex (ordinary locations)										**A**		
Electrical connections/cable entry												
M20											**F**	
½" NPT											**K**	
Local HMI												
Without display (closed lid of PBT/PC material)												**0**
With display (closed lid of PBT/PC material)												**1**
With display (clear lid with plastic window of PC material)												**3**

	Order code
Further designs	
Please add "**-Z**" to Article No. and specify Order code(s).	
Tag (device parameter, max. 32 characters) plate stainless steel 304/1.4301	**Y15**
Operating Instructions	
All literature is available to download for free, in a range of languages, at	
http://www.siemens.com/processinstrumentation/documentation	
Accessories	Article No.
SIMATIC RTU3030C compact, remote data manager with alarming	**6NH3112-3BA00-0XX0**
Intrinsically Safe barrier	**7NG4124-1AA00**
SITRANS RD100, loop powered display - see Chapter 7	**7ML5741-.....-.**
SITRANS RD150, remote digital display for 4 to 20 mA and HART devices - see Chapter 7	**7ML5742-.....-....**
SITRANS RD200, universal input display with Modbus conversion - see Chapter 7	**7ML5740-.....-..**
SITRANS RD300, dual line display with totalizer and linearization curve and Modbus conversion- see Chapter 7	**7ML5744-.....-..**
For applicable back up point level switch -see point level measurement section	

© Siemens 2020

Dimensional drawings

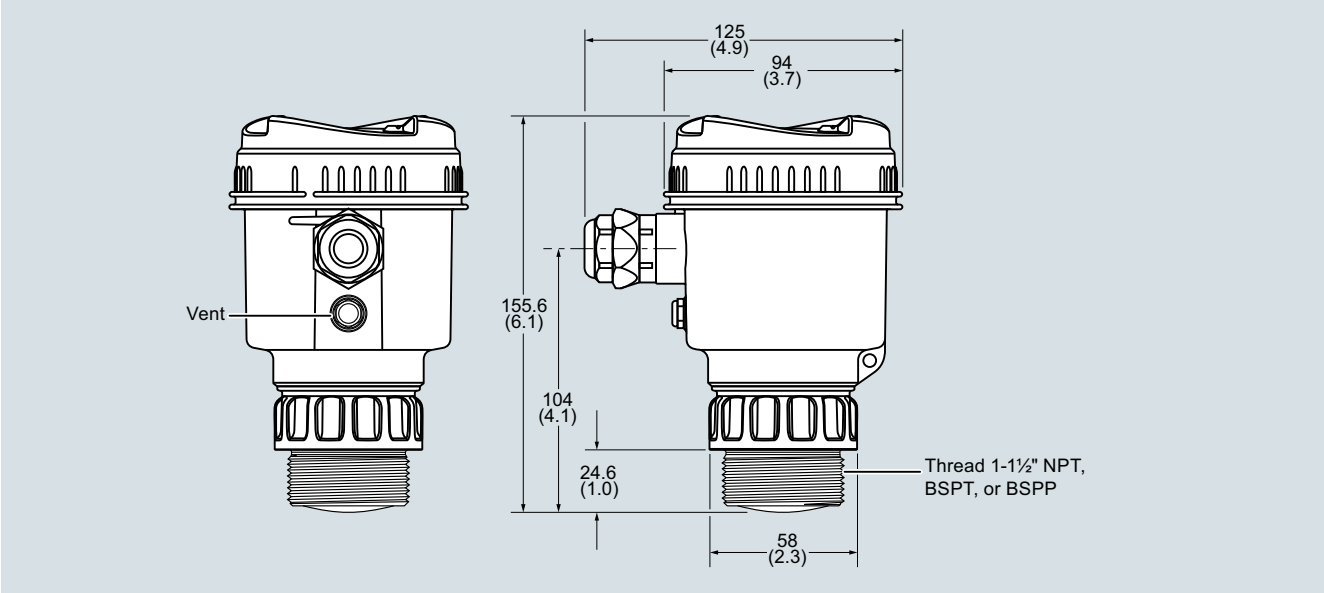

SITRANS LR150, dimensions in mm (inch)

Circuit diagrams

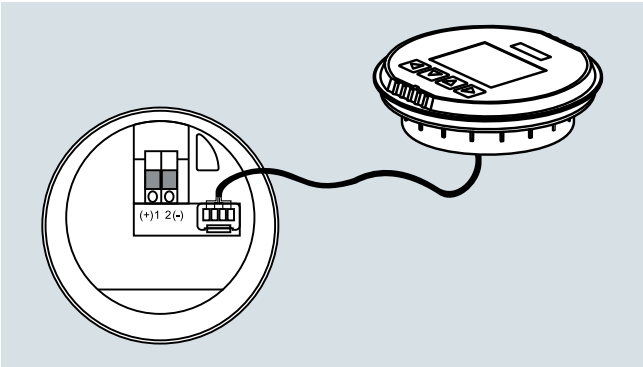

SITRANS LR150 connections

© Siemens 2020

Overview

SITRANS LR200 is a 2-wire, 6 GHz pulse radar level transmitter for continuous monitoring of liquids and slurries in process vessels including high temperature, pressure, agitation, and turbulence to a range of 20 m (65 ft).

Benefits

- Graphical local user interface (LUI) makes operation simple with plug-and-play setup using the intuitive Quick Start Wizard
- LUI displays echo profiles for diagnostic support
- Communication using HART or PROFIBUS PA
- Process Intelligence signal processing for improved measurement reliability and Auto False-Echo Suppression of fixed obstructions
- Programming using infrared Intrinsically Safe handheld programmer or SIMATIC PDM

Application

SITRANS LR200's unique design allows safe and simple programming using the Intrinsically Safe handheld programmer without having to open the instrument's lid. It also features a built-in alphanumeric display in four languages.

The SITRANS LR200 has a standard Uni-Construction polypropylene rod antenna that offers excellent chemical resistance and is hermetically sealed. The Uni-Construction antenna features an internal, integrated shield that eliminates vessel nozzle interference.

Startup is easy with as few as two parameters for basic operation. Installation is simplified as the electronics are mounted on a rotating head that swivels, allowing the instrument to line up with conduit or wiring connections or simply to adjust the position for easy viewing. SITRANS LR200 features Process Intelligence signal-processing technology for superior reliability.

- Key Applications: liquid process vessels with agitators, vaporous liquids, high temperatures, asphalt

Configuration

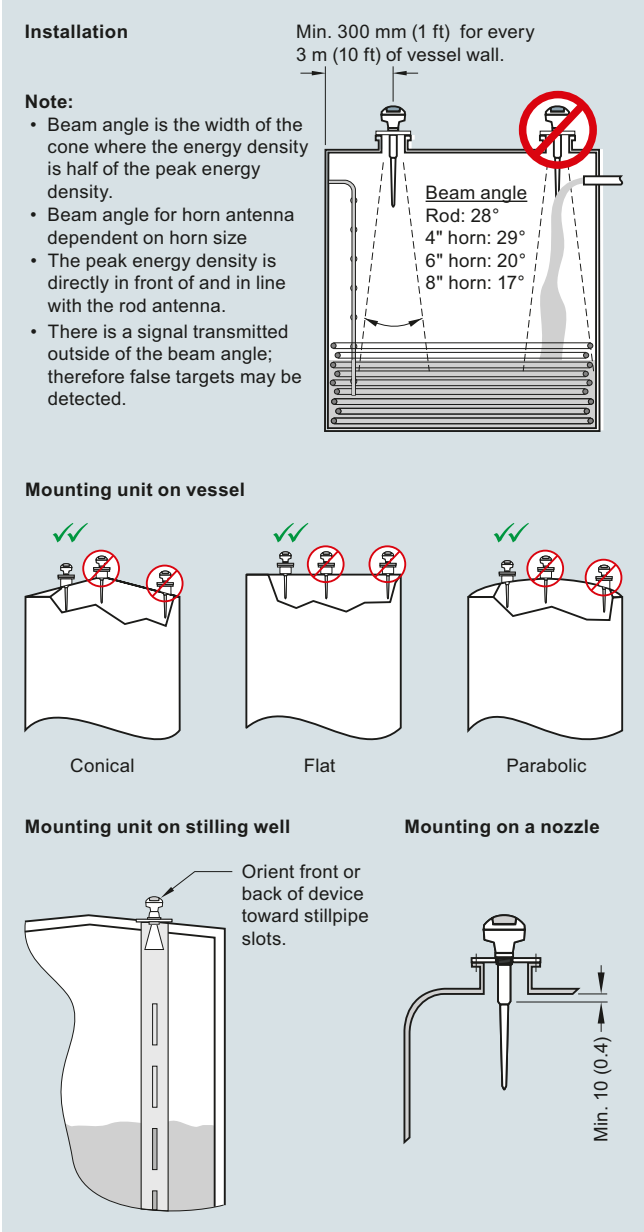

SITRANS LR200 installation, dimensions in mm (inch)

© Siemens 2020

Integration

SITRANS LR200 with flange adapter for connection to optional antennas.

Horn with waveguide extension. Used for high temperature isolation, long standpipes, and clearing tank obstructions.

Flat faced flange connection with PTFE rod antenna.

Shielded rod antenna with a stainless steel shield eliminates standpipe interference. Various lengths available.

Antenna configurations for SITRANS LR200

Antenna types	Flat Faced Flange with Rod	Shielded Rod	Horn (4", 6", 8" sizes available)
Connection type	Flat faced flange nominal pipe sizes 50, 80, 100, 150 mm (2, 3, 4, 6 inch)	Threaded 2" NPT, R 2" (BSPT), G 2" (BSPP) or flat faced flange nominal pipe sizes 80, 100 mm (3, 4 inch)	Flat faced flange nominal pipe sizes 50, 80, 100, 150 mm (2, 3, 4, 6 inch)
Wetted parts	PTFE	PTFE, 316L stainless steel, FKM O-ring	316L stainless steel PTFE, FKM O-ring
Extensions	50 or 100 mm (2 or 4 inch) PTFE or UHMW-PE	100, 150, 200 or 250 mm (4, 6, 8 or 10 inch) standard shield length	Use waveguide for extensions to 6 m (20 ft) long
Dielectric constant	> 3	> 3	> 3
Insertion length (max.)	41 cm (16.3 inch)	Variable	Variable with extension
Purging option (liquid or gas)	No	No	Yes
Sliding waveguide option for digesters[1)]	Yes	No	Yes
Weight[2)]	6.5 kg (14.3 lb)	5.0 kg (11 lb)	7.5 kg (16.5 lb)

1) Maximum pressure 0.5 bar g at 60 °C (7.25 psi g at 140 °F)

2) Not including extensions, includes SITRANS LR200 and smallest process connection

© Siemens 2020

Technical specifications

Mode of operation	
Measuring principle	Radar level measurement
Frequency	C-band, approx. 6 GHz
Measuring range	0.3 ... 20 m (1.0 ... 65 ft)
Output	
Analog output	4 ... 20 mA
Accuracy	± 0.02 mA
Span	Proportional or inversely proportional
Communications	HART Optional: PROFIBUS PA (Profile 3.0, Class B)
Fail-safe	Programmable as high, low or hold (Loss of Echo)
Performance (according to reference conditions IEC60770-1)	
From end of antenna to 600 mm	40 mm (1.57 inch)
Remainder of range	10 mm (0.4 inch) or 0.1 % of span (whichever is greater)
Rated operating conditions	
Installation conditions	
• Location	Indoor/outdoor
Ambient conditions (enclosure)	
• Ambient temperature	-40 ... +80 °C (-40 ... +176 °F)
• Storage temperature	-40 ... +80 °C (-40 ... +176 °F)
• Installation category	I
• Pollution degree	4
Medium conditions	
Dielectric constant ε_r	$\varepsilon_r > 1.6$ (for $\varepsilon_r < 3$, use stillpipe)
Vessel temperature and pressure	Varies with connection type; see Pressure/Temperature curves for more information
Design	
Enclosure	
• Material	Aluminum, polyester powder coated
• Cable inlet	2 x M20 x 1.5 or 2 x ½" NPT
Degree of protection	Type 4X/NEMA 4X, Type 6/ NEMA 6, IP67, IP68
Weight	< 2.82 kg (6.21 lb) (polypropylene rod antenna)
Display (local)	Multi-segment alphanumeric liquid crystal with bar graph (representing level) available in four languages
Antenna	
• Material	Polypropylene rod, hermetically sealed construction, optional PTFE
• Dimensions	Standard 100 mm (4 inch) shield for maximum 100 mm (4 inch) nozzle, or optional 250 mm (10 inch) long shield
• Optional rods and horn	Refer to SITRANS LR200 Antennas for optional rods and horns
Process connections	
• Process connection	1½" NPT [(Taper), ANSI/ASME B1.20.1] R 1½" [(BSPT), EN 10226], or G 1½" [(BSPP), EN ISO 228-1] (polypropylene rod antenna)
• Flange connection	Refer to SITRANS LR200 Antennas for more connections

Power supply	
4 ... 20 mA/HART	
• General Purpose, Non-incendive, Intrinsically Safe	Nominal 24 V DC (max. 30 V DC) with max. 550 Ω
• Flame proof, Increased safety, Explosion proof	Nominal 24 V DC (max. 30 V DC) with max. 250 Ω
PROFIBUS PA	• 10.5 mA • Per IEC 61158-2
Certificates and approvals	
General	$CSA_{US/C}$, CE, FM, RCM
Marine	• Lloyd's Register of Shipping • ABS Type Approval
Radio	FCC, Industry Canada, and European (RED), RCM
Hazardous	
• Intrinsically Safe (Brazil)	INMETRO Ex ia IIC T4 Ga
• Explosion Proof (Canada/USA)	CSA/FM, Class I, Div. 1, Groups A, B, C, D; Class II, Div. 1, Groups E, F, G; Class III, T4
• Intrinsically Safe (Canada/USA)	CSA/FM, Class I, Div. 1, Groups A, B, C, D; Class II, Div. 1, Groups E, F, G; Class III, T4
• Non-incendive (USA)	FM, Class I, Div. 2, Groups A, B, C, D, T5
• Flame Proof/Increased Safety (China)	NEPSI Ex d mb ia IIC T4/ Ex e mb ia IIC T4
• Flame Proof (Europe)	ATEX II 1/2 G Ex d mb ia IIC T4 Ga/Gb
• Increased Safety (Europe)	ATEX II 1/2 G Ex e mb ia IIC T4 Ga/Gb
• Intrinsically Safe (Europe)	ATEX II 1G Ex ia IIC T4
• Intrinsically Safe (International)	IECEx Ex ia IIC T4
• Intrinsically Safe (Russia/Kazakhstan)	EAC Ex ia
Programming	
Intrinsically Safe Siemens handheld programmer	Infrared receiver
• Approvals for handheld programmer	IS model: ATEX II 1GD Ex ia IIC T4 Ga Ex iaD 20 T135 °C T_a = -20 ... +50 °C CSA/FM Class I, II, and III, Div. 1, Groups A, B, C, D, E, F, G, T6 T_a = +50 °C
Handheld communicator	HART communicator 375
PC	• SIMATIC PDM • AMS • SITRANS DTM (for connecting to FDT such as PACTware or Fieldcare)
Display (local)	Multi-segment alphanumeric liquid crystal with bar graph (representing level) available in four languages

© Siemens 2020

Selection and ordering data

	Article No.
SITRANS LR200 Radar level transmitter with polypropylene rod ↗	**7ML5422-**
Continuous, non-contact, 20 m (66 ft) range, for liquids and slurries.	■ ■ ■ ■ **0**
↗ Click on the Article No. for the online configuration in the PIA Life Cycle Portal.	
Enclosure/Cable inlet	
Aluminum, epoxy painted	
2 x ½" NPT	**2**
2 x M20 x 1.5	**3**
Polypropylene antenna type - (Max. 3 Bar pressure and 80 °C)	
1½" NPT [(Taper), ANSI/ASME B1.20.1], c/w integral 100 mm shield	**A**
R 1½" [(BSPT), EN 10226], c/w integral 100 mm shield	**B**
G 1½" [(BSPP), EN ISO 228-1], c/w integral 100 mm shield	**C**
1½" NPT [(Taper), ANSI/ASME B1.20.1], c/w integral 250 mm shield	**D**
R 1½" [(BSPT), EN 10226], c/w integral 250 mm shield	**E**
G 1½" [(BSPP), EN ISO 228-1], c/w integral 250 mm shield	**F**
Approvals	
General Purpose, CE, RED, RCM	**A**
General Purpose, CSA, FM, Industry Canada, FCC	**B**
Intrinsically Safe, CSA Class I, II, Div. 1, Groups A, B, C, D, E, F, G, Industry Canada	**C**
Intrinsically Safe, FM Class I, II, Div. 1, Groups A, B, C, D, E, F, G, FCC	**D**
Intrinsically Safe, IECEx/ATEX II 1G Ex ia IIC T4, INMETRO Ex ia IIC T4, CE, RED, RCM; EAC	**E**
Non incendive, FM Class I, Div. 2, Groups A, B, C, D, FCC[1)]	**F**
Increased Safety, ATEX II ½G Ex e mb ia IIC T4 Ga/Gb, CE, RED, RCM; EAC[2)3)]	**G**
Flame Proof, ATEX II ½G Ex d mb ia IIC T4 Ga/Gb, CE, RED, RCM; EAC[3)]	**H**
Explosion Proof, CSA/FM Class I, II, III, Groups A, B, C, D, E, F, G, Industry Canada, FCC[1)3)]	**J**
Communication/Output	
PROFIBUS PA	**2**
4 ... 20 mA, HART, start-up at < 3.6 mA	**3**

1) Available with enclosure option 2 only.
2) Available with enclosure option 3 only.
3) Available with communication option 3 only.

	Order code
Further designs	
Please add "**-Z**" to Article No. and specify Order code(s).	
Stainless steel tag [69 x 50 mm (2.71 x 1.97 inch)]: Measuring-point number/identification (max. 27 characters); specify in plain text	**Y15**
Manufacturer's test certificate: M to DIN 55350, Part 18 and to ISO 9000	**C11**
Namur NE43 compliant, device preset to failsafe < 3.6 mA[1)]	**N07**
Operating Instructions	
All literature is available to download for free, in a range of languages, at	
http://www.siemens.com/processinstrumentation/documentation	

Accessories	Article No.
Handheld programmer, Intrinsically safe, EEx ia	**7ML1930-1BK**
HART modem/USB (for use with a PC and SIMATIC PDM)	**7MF4997-1DB**
One metallic cable gland M20 x 1.5, rated -40 ... +80 °C (-40 ... +176 °F), HART[2)]	**7ML1930-1AP**
One metallic cable gland M20 x 1.5, rated -40 ... +80 °C (-40 ... +176 °F), PROFIBUS PA[2)]	**7ML1930-1AQ**
One general purpose polymeric cable gland M20 x 1.5, rated -20 ... + 80 °C (-40 ... +176 °F)	**7ML1930-1AM**
SITRANS RD100, loop powered display - see Chapter 7	**7ML5741-.....-.**
SITRANS RD150, remote digital display for 4 ... 20 mA and HART devices - see Chapter 7	**7ML5742-.....-....**
SITRANS RD200, universal input display with Modbus conversion - see Chapter 7	**7ML5740-.....-..**
SITRANS RD300, dual line display with totalizer and linearization curve and Modbus conversion - see Chapter 7	**7ML5744-.....-..**
For applicable back up point level switch - see point level measurement section	

1) Available with communication option 3 only.
2) Product shipped with plastic cable gland, rated to -20 °C. If -40 °C rating required, then metallic cable gland is recommended.

© Siemens 2020

Selection and ordering data

	Article No.
SITRANS LR200 Radar level transmitter with PTFE rod ↗	**7ML5423-** ■■■■■ - ■■■■
Continuous, non-contact, 20 m (66 ft) range, for liquids and slurries.	
↗ Click on the Article No. for the online configuration in the PIA Life Cycle Portal.	
Antenna material (uses antenna adapter)	
PTFE, uses antenna adapter and additional process connection below	**1**
Process connection (refer to Pressure/Temperature curves, page 4/259)	
Flanges (316L stainless steel)	
DN 50 PN 16, Type A, flat faced	**A A**
DN 80 PN 16, Type A, flat faced	**B A**
DN 100 PN 16, Type A, flat faced	**C A**
DN 150 PN 16, Type A, flat faced	**D A**
2" ASME 150 lb, flat faced	**F B**
3" ASME 150 lb, flat faced	**G B**
4" ASME 150 lb, flat faced	**H B**
6" ASME 150 lb, flat faced	**J B**
DN 50 PN 40, flat faced	**A C**
DN 80 PN 40, flat faced	**B C**
DN 100 PN 40, flat faced	**C C**
DN 150 PN 40, flat faced	**D C**
2" ASME 300 lb, flat faced, available with Pressure rating option 1 only due to flange hole spacing	**F D**
3" ASME 300 lb, flat faced	**G D**
4" ASME 300 lb, flat faced	**H D**
6" ASME 300 lb, flat faced	**J D**
JIS DN 50 10K	**A E**
JIS DN 80 10K	**B E**
JIS DN 100 10K	**C E**
JIS DN 150 10K	**D E**
(Note: Flange bolting patterns and facings dimensionally correspond to the applicable ASME B16.5, or EN 1092-1, or JIS B 2220 standard.)	
Threaded connection (316L stainless steel)	
1½" NPT [(Taper), ANSI/ASME B1.20.1]	**L A**
2" NPT [(Taper), ANSI/ASME B1.20.1]	**M A**
R 1½" [(BSPT), EN 10226]	**L C**
R 2" [(BSPT), EN 10226]	**M C**
G 1½" [(BSPP), EN ISO 228-1]	**L E**
G 2" [(BSPP), EN ISO 228-1]	**M E**
Antenna extensions or Inactive shield length	
No antenna extension	**0**
50 mm (2 inch) extension, PTFE	**1**
100 mm (4 inch) extension, PTFE	**2**
100 mm (4 inch) extension, 316L stainless steel shield[1)]	**3**
150 mm (6 inch) extension, 316L stainless steel shield[1)]	**4**
200 mm (8 inch) extension, 316L stainless steel shield[1)]	**5**
250 mm (10 inch) extension, 316L stainless steel shield[1)]	**6**
Process seal/gasket	
Integral Gasket, for flat faced flange process connections only, not for Antenna extension options 3 ... 6	**0**
FKM O-ring, not available for combination of flat faced flanges with Antenna extension options 0, 1 or 2	**1**

	Article No.
SITRANS LR200 Radar level transmitter with PTFE rod	**7ML5423-** ■■■■■ - ■■■■
Continuous, non-contact, 20 m (66 ft) range, for liquids and slurries.	
Enclosure/Cable inlet	
Aluminum, Epoxy painted	
2 x ½" NPT	**2**
2 x M20 x 1.5	**3**
Communication/Output	
PROFIBUS PA	**B**
4 ... 20 mA, HART, start-up at < 3.6 mA	**C**
Approvals	
General Purpose, CE, RED, RCM	**A**
General Purpose, CSA, FM, Industry Canada, FCC	**B**
Intrinsically Safe, CSA Class I, II, Div. 1, Groups A, B, C, D, E, F, G, Industry Canada	**C**
Intrinsically Safe, FM Class I, II, Div. 1, Groups A, B, C, D, E, F, G, FCC	**D**
Intrinsically Safe, IECEx/ATEX II 1G Ex ia IIC T4, INMETRO Ex ia IIC T4, CE, RED, RCM; EAC	**E**
Non incendive, FM Class I, Div. 2, Groups A, B, C, D, FCC[2)]	**F**
Increased Safety, ATEX II ½G Ex e mb ia IIC T4 Ga/Gb, CE, RED, RCM; EAC[3)4)]	**G**
Flame Proof, ATEX II ½G Ex d mb ia IIC T4 Ga/Gb, CE, RED, RCM; EAC[4)]	**H**
Explosion Proof, CSA/FM Class I, II, III, Groups A, B, C, D, E, F, G, Industry Canada, FCC[2)4)]	**J**
Pressure rating	
Rating per Pressure/Temperature curves in manual	**0**
0.5 bar g (7.25 psi g) maximum	**1**

1) Available with process connection options BA, CA, DA, GB, HB, JB, BC, CC, DC, GD, HD, JD, BE, CE, DE, MA, MC, ME only.

2) Available with enclosure option 2 only.

3) Available with enclosure option 3 only.

4) Available with communication option C only.

© Siemens 2020

Selection and ordering data

	Order code
Further designs	
Please add "**-Z**" to Article No. and specify Order code(s).	
Stainless steel tag [69 x 50 mm (2.71 x 1.97 inch)]: Measuring-point number/identification (max. 27 characters); specify in plain text	**Y15**
Manufacturer's test certificate: M to DIN 55350, Part 18 and to ISO 9000	**C11**
Material inspection Certificate Type 3.1 per EN 10204	**C12**
Namur NE43 compliant, device preset to failsafe < 3.6 mA[3)]	**N07**
Operating Instructions	
All literature is available to download for free, in a range of languages, at	

http://www.siemens.com/processinstrumentation/documentation

	Article No
Accessories	
Handheld programmer, Intrinsically safe, EEx ia	**7ML1930-1BK**
Antenna, rod, PTFE	**7ML1830-1HC**
Antenna extension, 50 mm (2 inch), PTFE	**7ML1830-1CH**
Antenna extension, 100 mm (4 inch), PTFE	**7ML1830-1CG**
HART modem / USB (for use with PC and SIMATIC PDM)	**7MF4997-1DB**
Metallic cable gland M20 x 1.5, rated -40 °C (-40 °F) ... 80 °C (176 °F), HART (two are required)	**7ML1930-1AP**
Metallic cable gland M20 x 1.5, rated -40 °C (-40 °F) ... 80 °C (176 °F), PROFIBUS PA (two required)	**7ML1930-1AQ**
One General Purpose polymeric cable gland M20 x 1.5, rating for -20 °C (-4°F) ... + 80 °C (176 °F)	**7ML1930-1AM**
SITRANS RD100, loop powered display - see Chapter 7	**7ML5741-.....-.**
SITRANS RD150, remote digital display for 4 ... 20 mA and HART devices - see Chapter 7	**7ML5742-.....-....**
SITRANS RD200, universal input display with Modbus conversion - see Chapter 7	**7ML5740-.....-..**
SITRANS RD300, dual line display with totalizer and linearization curve and Modbus conversion - see Chapter 7	**7ML5744-.....-..**
For applicable back up point level switch - see point level measurement section	

© Siemens 2020

Selection and ordering data

	Article No.									
SITRANS LR200 Radar level transmitter with horn ↗	**7ML5425-**									
Continuous, non-contact, 20 m (66 ft) range, for liquids and slurries.	■	■	■	■	■	-	■	■	■	■
↗ Click on the Article No. for the online configuration in the PIA Life Cycle Portal.										
Antenna material (uses antenna adapter)										
316L stainless steel with PTFE cone emitter	**0**									
316L stainless steel with PTFE cone emitter and purge connection with 1/8" NPT inlet[1]	**1**									
Process connection (refer to Pressure/Temperature curves, page 4/259)										
Flanges (316L stainless steel)										
DN 50 PN 16 EN 1092-1 Type A flat faced[1]		**A**	**A**							
DN 80 PN 16 EN 1092-1 Type A flat faced		**B**	**A**							
DN 100 PN 16 EN 1092-1 Type A flat faced		**C**	**A**							
DN 150 PN 16 EN 1092-1 Type A flat faced		**D**	**A**							
DN 200 PN 16 EN 1092-1 Type A flat faced		**E**	**A**							
DN 80 PN 10/16 DIN EN 1092-1 Type B1 raised face[2]		**B**	**F**							
DN 100 PN 10/16 DIN EN 1092-1 Type B1 raised face[3]		**C**	**F**							
DN 150 PN 10/16 DIN EN 1092-1 Type B1 raised face[3]		**D**	**F**							
DN 200 PN 16 DIN EN 1092-1 Type B1 raised face[3]		**E**	**F**							
2" ASME 150 lb, flat faced[1]		**F**	**B**							
3" ASME 150 lb, flat faced		**G**	**B**							
4" ASME 150 lb, flat faced		**H**	**B**							
6" ASME 150 lb, flat faced		**J**	**B**							
8" ASME 150 lb, flat faced		**K**	**B**							
DN 50 PN 40, flat faced[3]		**A**	**C**							
DN 80 PN 40, flat faced[3]		**B**	**C**							
DN 100 PN 40, flat faced[3]		**C**	**C**							
DN 80 PN 25/40 DIN EN 1092-1 Type B1 raised face[3]		**C**	**G**							
DN 100 PN 25/40 DIN EN 1092-1 Type B1 raised face[3]		**D**	**G**							
DN 150 PN 25/40 DIN EN 1092-1 Type B1 raised face[3]		**E**	**G**							
2" ASME 300 lb, flat faced[1][3]		**F**	**D**							
3" ASME 300 lb, flat faced[3]		**G**	**D**							
4" ASME 300 lb, flat faced[3]		**H**	**D**							
JIS DN 50 10K[1]		**A**	**E**							
JIS DN 80 10K		**B**	**E**							
JIS DN 100 10K		**C**	**E**							
JIS DN 150 10K		**D**	**E**							
JIS DN 200 10K		**E**	**E**							
(Note: Flange bolting patterns and facings dimensionally correspond to the applicable ASME B16.5, or EN 1092-1, or JIS B 2220 standard.)										
Communication/Output										
PROFIBUS PA				**1**						
4 ... 20 mA, HART, start-up at < 3.6 mA				**2**						

	Article No.									
SITRANS LR200 Radar level transmitter with horn	**7ML5425-**									
Continuous, non-contact, 20 m (66 ft) range, for liquids and slurries.	■	■	■	■	■	-	■	■	■	■
Process seal/gasket										
FKM (-40 ... +200 °C)					**0**					
Enclosure/Cable inlet										
Aluminum, Epoxy painted										
2 x ½" NPT							**2**			
2 x M20 x 1.5							**3**			
Horn size/Waveguide options										
80 mm (3 inch) horn[3]								**B**		
100 mm (4 inch) horn[4]								**C**		
150 mm (6 inch) horn								**D**		
200 mm (8 inch) horn								**E**		
100 mm (4 inch) horn with 100 mm (4 inch) waveguide extension[4]								**F**		
100 mm (4 inch) horn with 150 mm (6 inch) waveguide extension[4]								**G**		
100 mm (4 inch) horn with 200 mm (8 inch) waveguide extension[4]								**H**		
100 mm (4 inch) horn with 250 mm (10 inch) waveguide extension[4]								**J**		
150 mm (6 inch) horn with 100 mm (4 inch) waveguide extension								**K**		
150 mm (6 inch) horn with 150 mm (6 inch) waveguide extension								**L**		
150 mm (6 inch) horn with 200 mm (8 inch) waveguide extension								**M**		
150 mm (6 inch) horn with 250 mm (10 inch) waveguide extension								**N**		
200 mm (8 inch) horn with 100 mm (4 inch) waveguide extension								**P**		
200 mm (8 inch) horn with 150 mm (6 inch) waveguide extension								**Q**		
200 mm (8 inch) horn with 200 mm (8 inch) waveguide extension								**R**		
200 mm (8 inch) horn with 250 mm (10 inch) waveguide extension								**S**		

© Siemens 2020

Selection and ordering data

	Article No.
SITRANS LR200 Radar level transmitter with horn Continuous, non-contact, 20 m (66 ft) range, for liquids and slurries.	**7ML5425-** ■■■■■ - ■■■■
Approvals	
General Purpose, CE, RED, RCM	**A**
General Purpose, CSA, FM, Industry Canada, FCC	**B**
Intrinsically Safe, CSA Class I, II, Div. 1, Groups A, B, C, D, E, F, G, Industry Canada	**C**
Intrinsically Safe, FM Class I, II, Div. 1, Groups A, B, C, D, E, F, G, FCC	**D**
Intrinsically Safe, IECEx/ATEX II 1G Ex ia IIC T4, INMETRO Ex ia IIC T4, CE, RED, RCM; EAC	**E**
Non incendive, FM Class I, Div. 2, Groups A, B, C, D, FCC[4]	**F**
Increased Safety, ATEX II ½G Ex e mb ia IIC T4 Ga/Gb, CE, RED, RCM; EAC[5][6]	**G**
Flame Proof, ATEX II ½G Ex d mb ia IIC T4 Ga/Gb, CE, RED, RCM; EAC[7]	**H**
Explosion Proof, CSA/FM Class I, II, III, Groups A, B, C, D, E, F, G, Industry Canada, FCC[5][7]	**J**
Pressure rating	
Rating per Pressure/Temperature curves in manual	**0**
0.5 bar g (7.25 psi g) maximum	**1**

1) Available with pressure rating option 1 only.
2) Available with Antenna Material options 0 and 1 only.
3) For stillpipe applications only.
4) Available with enclosure option 2 only.
5) Available with enclosure option 3 only.
6) Available with communication option 2 only.
7) Available with Communication/Output option 2 only.

	Order code
Further designs	
Please add "**-Z**" to Article No. and specify Order code(s).	
Stainless steel tag [69 x 50 mm (2.71 x 1.97 inch)]: Measuring-point number/identification (max. 27 characters); specify in plain text	**Y15**
Manufacturer's test certificate: M to DIN 55350, Part 18 and to ISO 9000	**C11**
Material inspection Certificate Type 3.1 per EN 10204	**C12**
Namur NE43 compliant, device preset to failsafe < 3.6 mA[1]	**N07**
Operating Instructions	
All literature is available to download for free, in a range of languages, at	
http://www.siemens.com/processinstrumentation/documentation	
Accessories	Article No.
Handheld programmer, Intrinsically safe, EEx ia	**7ML1930-1BK**
HART modem/USB (for use with a PC and SIMATIC PDM)	**7MF4997-1DB**
One metallic cable gland M20 x 1.5, rated -40 ... +80 °C (-40 ... +176 °F), HART[2]	**7ML1930-1AP**
One metallic cable gland M20 x 1.5, rated -40 ... +80 °C (-40 ... +176 °F), PROFIBUS PA[3]	**7ML1930-1AQ**
One general purpose polymeric cable gland M20 x 1.5, rated -40 ... +80 °C (-40 ... +176 °F)	**7ML1930-1AM**
SITRANS RD100, loop powered display - see Chapter 7	**7ML5741-.....-.**
SITRANS RD150, remote digital display for 4 ... 20 mA and HART devices - see Chapter 7	**7ML5742-.....-....**
SITRANS RD200, universal input display with Modbus conversion - see Chapter 7	**7ML5740-.....-..**
SITRANS RD300, dual line display with totalizer and linearization curve and Modbus conversion - see Chapter 7	**7ML5744-.....-..**
For applicable back up point level switch - see point level measurement section	

1) Available with communication option 2 only.
2) Product shipped with plastic cable gland, rated to -20 °C. If -40 °C rating required, then metallic cable gland is recommended.
3) Available with enclosure option 2 only.

© Siemens 2020

Selection and ordering data

SITRANS LR200 Specials

	Article No.
SITRANS LR200 PROFIBUS PA aluminum enclosure kit with electronics and covers (7ML5422, 7ML5423, 7ML5424, 7ML5425), calibrated for use with standard rod antenna	
SITRANS LR200 aluminum enclosure with board stack, LUI display, 5.8 GHz, M20 cable inlet, approval option E, with PROFIBUS PA communication, no process connection.	**A5E01483420**
SITRANS LR200 aluminum enclosure with board stack, LUI display, 5.8 GHz, M20 cable inlet, approval option A, with PROFIBUS PA communication, no process connection.	**A5E01483440**
SITRANS LR200 aluminum enclosure with board stack, LUI display, 6.3 GHz, M20 cable inlet, approval option C, with PROFIBUS PA communication, no process connection.	**A5E01483456**
SITRANS LR200 aluminum enclosure with board stack, LUI display, 6.3 GHz, NPT cable inlet, approval option C, with PROFIBUS PA communication, no process connection.	**A5E01483547**
SITRANS LR200 aluminum enclosure with board stack, LUI display, 5.8 GHz, NPT cable inlet, approval option E, with PROFIBUS PA communication, no process connection.	**A5E01483559**
SITRANS LR200 HART aluminum enclosure kit with electronics and covers (7ML5422, 7ML5423, 7ML5424, 7ML5425), calibrated for use with standard rod antenna	
SITRANS LR200 aluminum enclosure with board stack, LUI display, 5.8 GHz, M20 cable inlet, approval option A, with HART communication start-up at < 3.6 mA, no process connection.	**A5E02956419**
SITRANS LR200 aluminum enclosure with board stack, LUI display, 5.8 GHz, M20 cable inlet, approval option E, with HART communication start-up at < 3.6 mA, no process connection.	**A5E02956420**
SITRANS LR200 aluminum enclosure with board stack, LUI display, 5.8 GHz, M20 cable inlet, approval option G, with HART communication start-up at < 3.6 mA, no process connection.	**A5E02956421**
SITRANS LR200 aluminum enclosure with board stack, LUI display, 5.8 GHz, M20 cable inlet, approval option H, with HART communication start-up at < 3.6 mA, no process connection.	**A5E02956422**
SITRANS LR200 aluminum enclosure with board stack, LUI display, 5.8 GHz, NPT cable inlet, approval option A, with HART communication start-up at < 3.6 mA, no process connection.	**A5E03617085**
SITRANS LR200 aluminum enclosure with board stack, LUI display, 6.3 GHz, NPT cable inlet, approval option B, with HART communication start-up at < 3.6 mA, no process connection.	**A5E03617086**
SITRANS LR200 aluminum enclosure with board stack, LUI display, 5.8 GHz, NPT cable inlet, approval option C, with HART communication start-up at < 3.6 mA, no process connection.	**A5E03617087**
SITRANS LR200 aluminum enclosure with board stack, LUI display, 6.3 GHz, NPT cable inlet, approval option E, with HART communication start-up at < 3.6 mA, no process connection.	**A5E03617088**

	Article No.
Sun shield for SITRANS LR200 enclosure, stainless steel	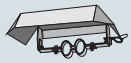
	A5E39142556
SITRANS LR200 horn antenna kits with mounting screws (no emitter supplied)	
80 mm (3 inch) horn antenna kit	**PBD-25500K02A**
100 mm (4 inch) horn antenna kit	**PBD-25500K03A**
150 mm (6 inch) horn antenna kit	**PBD-25500K05A**
SITRANS LR200 Extension Kits for Horn Antenna with mounting screw	
100 mm (4 inch) extension kit for horn antenna	**PBD-25501K0100A**
150 mm (6 inch) extension kit for horn antenna	**PBD-25501K0150A**
200 mm (8 inch) extension kit for horn antenna	**PBD-25501K0200A**
250 mm (10 inch) extension kit for horn antenna	**PBD-25501K0250A**
500 mm (20 inch) extension kit for horn antenna	**PBD-25501K0500A**
1 000 mm (40 inch) extension kit for horn antenna	**PBD-25501K1000A**
SITRANS LR200 flanged rod antenna kit with 316L stainless steel flat faced flanges	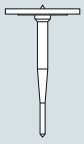
Flanged PTFE rod antenna kit, 2" ASME, 150 lb. See drawing 51003 on http://www.siemens.com/radar[1)4)]	**PBD-51003K020AAAA**
Flanged PTFE rod antenna kit, DN 50 PN16. See drawing 51003 on http://www.siemens.com/radar.[1)4)]	**PBD-51003K050AJAA**
Flanged PTFE rod antenna kit, JIS 10K DN 50. See drawing 51003 on http://www.siemens.com/radar.[1)4)]	**PBD-51003K050AOAA**
SITRANS LR200 PTFE rod antenna kit with 316L stainless steel 1½" pipe thread process connection	
PTFE rod antenna kit, R 1½" (BSPT), EN 10226 316L stainless steel process connection, FKM O-ring. See drawing 51004 on http://www.siemens.com/radar.[4)]	**PBD-51004K2AAA**
PTFE rod antenna kit, 1½" G 316L stainless steel process connection, FKM O-ring. See drawing 51004 on http://www.siemens.com/radar.[4)]	**PBD-51004K3AAA**

© Siemens 2020

Selection and ordering data

	Article No.
SITRANS LR200 PTFE rod antenna kit with 316L stainless steel 2" pipe thread process connection	
PTFE rod antenna kit, 2" NPT 316L stainless steel process connection, FKM O-ring. See drawing 51005 on http://www.siemens.com/radar.[4)]	**PBD-51005K1AAA**
PTFE rod antenna kit, R 2" (BSPT), EN 10226 316L stainless steel process connection, FKM O-ring. See drawing 51005 on http://www.siemens.com/radar.[4)]	**PBD-51005K2AAA**
PTFE rod antenna kit, 2" G 316L stainless steel process connection, FKM O-ring. See drawing 51005 on http://www.siemens.com/radar.[4)]	**PBD-51005K3AAA**
SITRANS LR200 PTFE rod antenna kit (100 mm shield) with 316L stainless steel 2" pipe thread process connection	
PTFE rod antenna shielded kit, 2" NPT 316L stainless steel process connection, FKM O-ring, 100 mm 316L stainless steel shield. See drawing 51002 on http://www.siemens.com/radar.[3)4)]	**PBD-51002K0100AAA**
PTFE rod antenna shielded kit, R 2" (BSPT), EN 10226 316L stainless steel process connection, FKM O-ring, 100 mm 316L stainless steel shield. See drawing 51002 on http://www.siemens.com/radar.[3)4)]	**PBD-51002K0100BAA**
PTFE rod antenna shielded kit, 2" G 316L stainless steel process connection, FKM O-ring, 100 mm 316L stainless steel shield. See drawing 51002 on http://www.siemens.com/radar.[3)4)]	**PBD-51002K0100CAA**
SITRANS LR200 horn antenna kit with 316L stainless steel flat faced flange, with PTFE emitter (without waveguide)	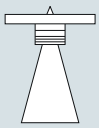
Horn antenna kit, 2" ASME 316L stainless steel flange 3" horn, PTFE emitter [1)4)]	**PBD-51006K020AAAA**
Horn antenna kit, 2" ASME 316L stainless steel flange 4" horn, PTFE emitter [1)2)]	**PBD-51006K020AABA**
Horn antenna kit, 2" ASME 316L stainless steel flange 6" horn, PTFE emitter [1)2)]	**PBD-51006K020AACA**
Horn antenna kit, 2 " ASME 316L stainless steel flange 8" horn, PTFE emitter [1)2)]	**PBD-51006K020AADA**
Horn antenna kit, DN 50 PN 16 316L stainless steel flange 80 mm horn, PTFE emitter [1)2)]	**PBD-51006K050AJAA**
Horn antenna kit, DN 50 PN 16 316L stainless steel flange 100 mm horn, PTFE emitter [1)2)]	**PBD-51006K050AJBA**
Horn antenna kit, DN 50 PN 16 316L stainless steel flange 150 mm horn, PTFE emitter [1)2)]	**PBD-51006K050AJCA**
Horn antenna kit, DN 50 PN 16 316L stainless steel flange 200 mm horn, PTFE emitter [1)2)]	**PBD-51006K050AJDA**

	Article No.
SITRANS LR200 PTFE flanged rod antenna kit with 316L stainless steel shield and 316L stainless steel flat faced flange	
PTFE shielded rod antenna kit, flanged, 3" ASME 150 lb 316L stainless steel flange, 100 mm 316L stainless steel shield.[1)4)]	**PBD-51014K0100AAA**
PTFE shielded rod antenna kit, flanged, DN 80 PN 16 316L stainless steel flange, 100 mm 316L stainless steel shield.[1)4)]	**PBD-51014K0100EJA**
PTFE shielded rod antenna kit, flanged, 3" ASME 150 lb 316L stainless steel flange, 150 mm 316L stainless steel shield.[1)4)]	**PBD-51014K0150AAA**
PTFE shielded rod antenna kit, flanged, DN 80 PN 16 316L stainless steel flange, 150 mm 316L stainless steel shield.[1)4)]	**PBD-51014K0150EJA**
PTFE shielded rod antenna kit, flanged, 3" ASME 150 lb 316L stainless steel flange, 200 mm 316L stainless steel shield.[1)4)]	**PBD-51014K0200AAA**
PTFE shielded rod antenna kit, flanged, DN 80 PN 16 316L stainless steel flange, 200 mm 316L stainless steel shield.[1)4)]	**PBD-51014K0200EJA**
PTFE shielded rod antenna kit, flanged, 3" ASME 150 lb 316L stainless steel flange, 250 mm 316L stainless steel shield.[1)4)]	**PBD-51014K0250AAA**
PTFE shielded rod antenna kit, flanged, DN 80 PN 16 316L stainless steel flange, 250 mm 316L stainless steel shield.[1)4)]	**PBD-51014K0250EJA**
PTFE paste	
Kit, PTFE paste, Tube, 250 mL	**PBD-51036065**
Cable gland	
One metallic cable gland M20 x 1.5, rated -40 ... +80 °C (-40 ... +176 °F), HART	**7ML1930-1AP**
One metallic cable gland M20 x 1.5, rated -40 ... +80 °C (-40 ... +176 °F), PROFIBUS PA	**7ML1930-1AQ**

1) Available in flange sizes including ASME, DIN and JIS. Please consult a local sales person for details.

2) Available with no pressure rating. Please consult a local sales person for details.

3) Available in other shield lengths. Please consult a local sales person for details.

4) Available with Pressure rating. Please consult a local sales person for details.

Customers interested in a custom designed device should consult a local sales person. For more information, please visit http://www.automation.siemens.com/aspa_app.

© Siemens 2020

Characteristic curves

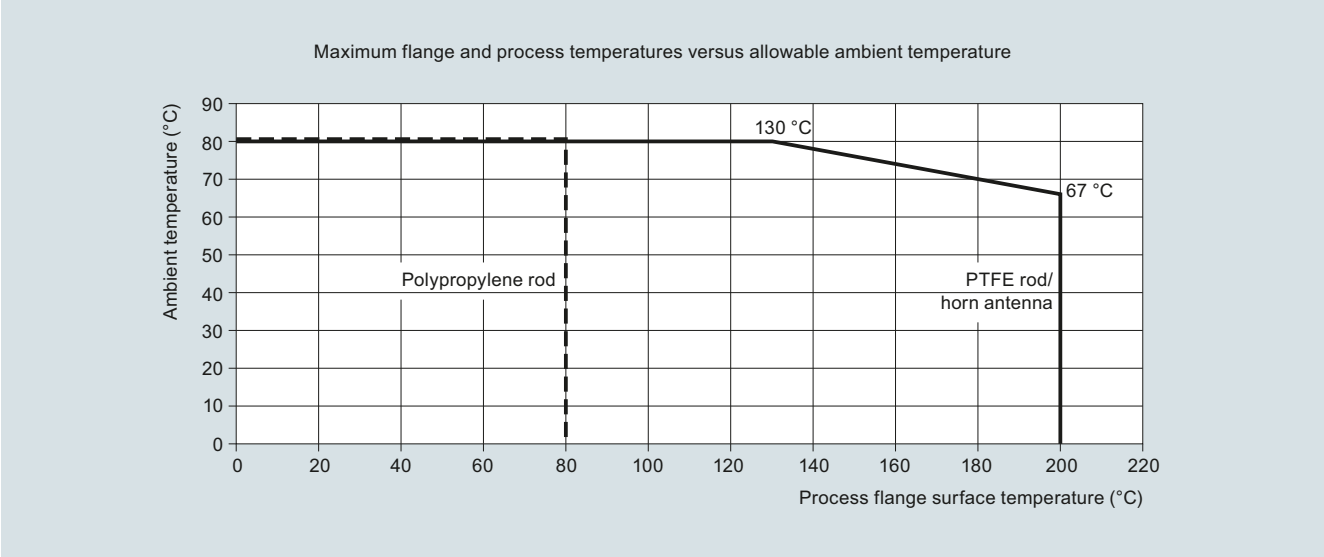

SITRANS LR200 ambient/process flange surface temperature curve

© Siemens 2020

Characteristic curves (continued)

SITRANS LR200 process pressure/temperature derating curves

© Siemens 2020

Dimensional drawings

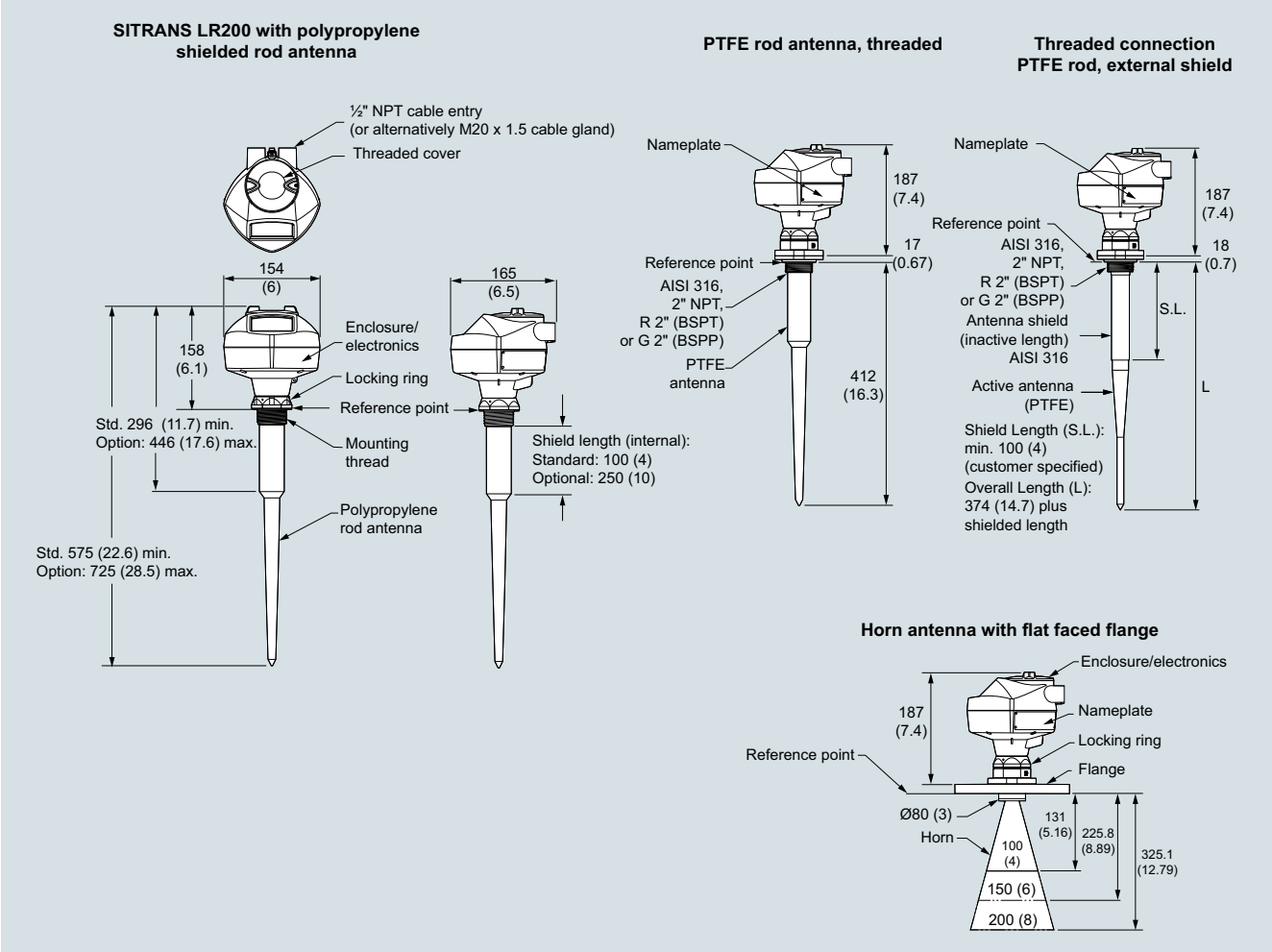

SITRANS LR200, dimensions in mm (inch)

© Siemens 2020

Circuit diagrams

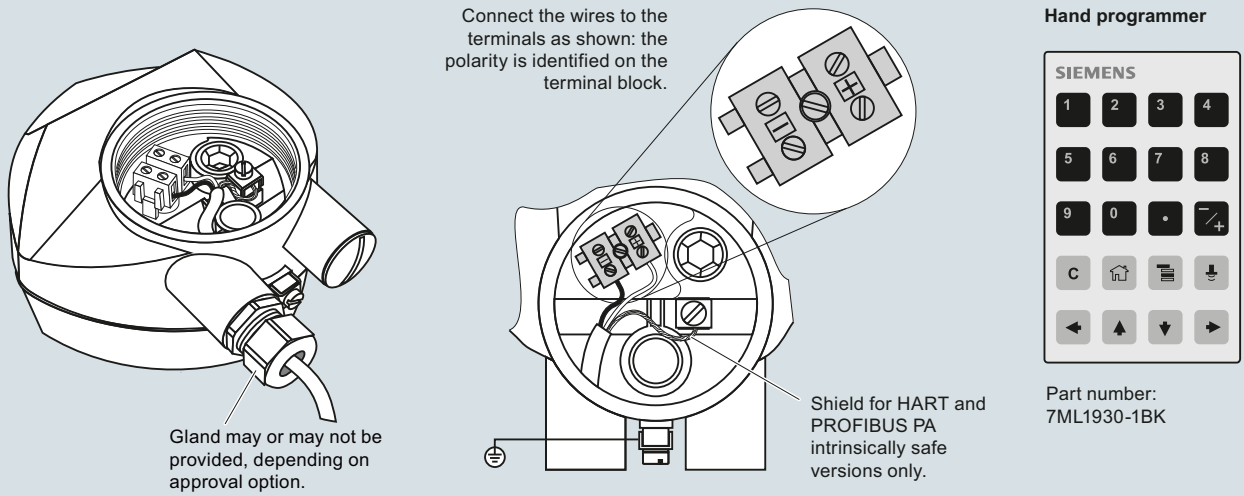

Notes:

1. DC terminal shall be supplied from an SELV source in accordance with IEC 1010-1 Annex H.
2. All field wiring must have insulation suitable for rated input voltages.
3. Use shielded twisted pair cable (14 ... 22 AWG) for HART version.
4. Separate cables and conduit may be required to conform to standard instrumentation wiring practices or electrical codes.

SITRANS LR200 connections

© Siemens 2020

Overview

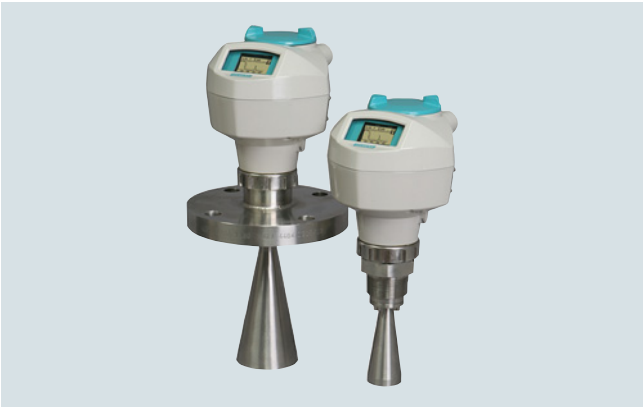

SITRANS LR250 is a 2-wire, 25 GHz pulse radar level transmitter for continuous monitoring of liquids and slurries in storage and process vessels including high temperature and pressure, to a range of 20 m (66 ft).

Benefits

- Graphical local user interface (LUI) makes operation simple with plug-and-play setup using the intuitive Quick Start Wizard
- LUI displays echo profiles for diagnostic support
- 25 GHz high frequency allows for small antennas for easy mounting in nozzles
- Insensitive to mounting location and obstructions, and less sensitive to nozzle interference
- Short blanking distance for improved minimum measuring range to 50 mm (2 inch) from the end of the antenna
- Communication using HART, PROFIBUS PA, or FOUNDATION Fieldbus
- Process Intelligence signal processing for improved measurement reliability and Auto False-Echo Suppression of fixed obstructions
- Programming using infrared Intrinsically Safe handheld programmer or over a network using SIMATIC PDM, Emerson AMS, or Field Device Tools such as PACTware or Fieldcare via SITRANS DTM
- Functional Safety (SIL 2). Device suitable for use in accordance with IEC 61508 and IEC 61511
- 3 mm (0.118 inch) accuracy in accordance with IEC 60770-1
- Suitable for API 2350

Application

SITRANS LR250 includes a graphical local user interface (LUI) that improves setup and operation by including an intuitive Quick Start Wizard, and echo profile displays for diagnostic support. Startup is easy using the Quick Start wizard with a few parameters required for basic operation.

The 25 GHz frequency creates a narrow, focused beam allowing for smaller horn antenna options and decreasing sensitivity to obstructions.

SITRANS LR250's unique design allows safe and simple programming using the Intrinsically Safe handheld programmer without saving to open the instrument's lid.

SITRANS LR250 measures superbly on low dielectric media, and in small vessels, as well as tall and narrow vessels.

- Key Applications: liquid bulk storage tanks, process vessels, vaporous liquids, high temperatures, low dielectric media and applications with functional safety requirements

Configuration

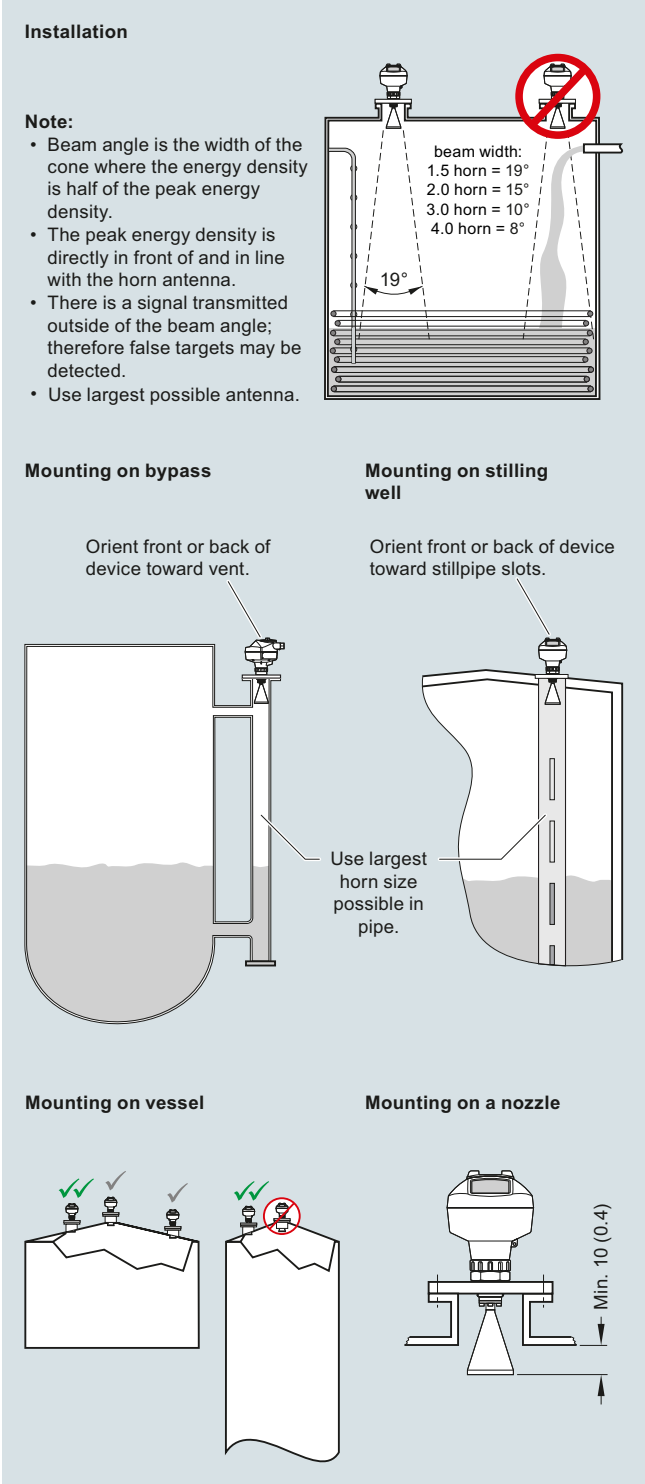

SITRANS LR250 installation, dimensions in mm (inch)

© Siemens 2020

Technical specifications

Mode of operation	
Measuring principle	Radar level measurement
Frequency	K-band (25.0 GHz)
Minimum measuring range	50 mm (2 inch) from end of antenna
Maximum measuring range	20 m (65 ft), antenna dependent
Output	
HART	Version 5.1
• Analog output	4 ... 20 mA
• Accuracy	± 0.02 mA
• Fail-safe	• Programmable as high low or hold (loss of echo) • NE 43 programmable
PROFIBUS PA	Profile 3.01
• Function blocks	2 Analog Input (AI)
FOUNDATION Fieldbus	H1
• Functionality	Basic or LAS
• Version	ITK 5.2.0
• Function blocks	2 Analog Input (AI)
Performance (according to reference conditions IEC60770-1)	
Maximum measured error	3 mm (0.118 inch)
Influence of ambient temperature	< 0.003 %/K
Rated operating conditions	
Installation conditions	
• Location	Indoor/outdoor
Ambient conditions (enclosure)	
• Ambient temperature	-40 ... +80 °C (-40 ... +176 °F)
• Storage temperature	-40 ... +80 °C (-40 ... +176 °F)
• Installation category	I
• Pollution degree	4
Medium conditions	
Dielectric constant ε_r	> 1.6, antenna and application dependent
Process temperature	-40 ... +200 °C (-40 ... +392 °F) (at process connection with FKM O-ring) -20 ... +200 °C (-4 ... +392 °F) (at process connection with FFKM O-ring)
Process pressure	Up to 40 bar g (580 psi g), process connection and temperature dependent. See Pressure/Temperature curves for more information
Design	
Enclosure	
• Material	Aluminum, polyester powder-coated
• Cable inlet	2 x M20 x 1.5 or 2 x ½" NPT
Degree of protection	Type 4X/NEMA 4X, Type 6/NEMA 6, IP67, IP68
Weight	< 3 kg (6.6 lb) 3.75 mm (1½ inch) threaded connection with 1½" horn antenna
Display (local)	Graphic local user interface including quick start wizard and echo profile display
Antenna	
• Material	316L stainless steel
• Dimensions (nominal horn sizes)	Standard 1.5 inch (40 mm), 2 inch (48 mm), 3 inch (75 mm), 4 inch (95 mm) horn, and optional 100 mm (4 inch) horn extension
Process connections	
• Process connection	1½", 2" or 3" NPT [(Taper), ANSI/ASME B1.20.1] R 1½", 2" or 3" [(BSPT), EN 10226] G 1½", 2" or 3" [(BSPP), EN ISO 228-1]
• Flange connection	2", 3", 4" (ANSI 150, 300 lb), 50, 80, 100 mm (PN 16, 40, JIS 10K)

Power supply	
4 ... 20 mA/HART	Nominal 24 V DC (max. 30 V DC) with max. 550 Ω
PROFIBUS PA	• 15 mA • Per IEC 61158-2
FOUNDATION Fieldbus	• 20.0 mA • Per IEC 61158-2
Certificates and approvals	
General	$CSA_{US/C}$, CE, FM, RCM
Radio	FCC, Industry Canada, RED, RCM
Hazardous	
• Explosion Proof (Brazil)	INMETRO Ex d ia mb IIC T4 Ga/Gb, Ex ia ta IIIC T100 °C Da
• Increased Safety (Brazil)	INMETRO Ex e ia mb IIC T4 Ga/Gb, Ex ia ta IIIC T100 °C Da
• Intrinsically Safe (Brazil)	INMETRO Ex ia IIC T4 Ga, Ex ia ta IIIC T100 °C Da
• Explosion Proof (Canada/USA)	CSA/FM Class I, Div. 1, Groups A, B, C, D; Class II, Div. 1, Groups E, F, G; Class III T4
• Intrinsically Safe (Canada/USA)	CSA/FM Class I, Div. 1, Groups A, B, C, D; Class II, Div. 1, Groups E, F, G; Class III T4
• Non-incendive (Canada/USA)	CSA/FM Class I, Div. 2, Groups A, B, C, D T5
• Flame Proof/Increased Safety (China)	NEPSI Ex d ia mb IIC T4 Ga/Gb, Ex e ia mb IIC T4 Ga/Gb, Ex iaD tD A20 IP67 T100 °C
• Intrinsically Safe (China)	NEPSI Ex ia IIC T4 Ga, Ex iaD tD A20 IP67 T100 °C
• Non-sparking (China)	NEPSI Ex nA IIC T4 Gc
• Intrinsically Safe (Europe)	ATEX II 1G Ex ia IIC T4 Ga ATEX II 1D Ex ia IIIC T100 °C Da
• Non-sparking (Europe)	ATEX II 3G Ex nA IIC T4 Gc
• Flame Proof (International/Europe)	IECEx/ATEX II 1/2 GD, 1D, 2D, Ex d mb ia IIC T4 Ga/Gb, Ex ia ta IIC T100 °C Da
• Increased Safety (International/Europe)	IECEx/ATEX II 1/2 GD, 1D, 2D, Ex e mb ia IIC T4 Ga/Gb, Ex ia ta IIIC T100 °C Da
• Intrinsically Safe (International)	IECEx/ATEX II 1 G Ex ia IIC T4 Ga, IECEX/ATEX II 1D Ex ia ta IIC T100 °C Da
• Explosion Proof (Russia/Kazakhstan)	EAC Ex d
• Increased Safety (Russia/Kazakhstan)	EAC Ex e
• Intrinsically Safe (Russia/Kazakhstan)	EAC Ex ia
• Marine	• Lloyd's Register of Shipping • ABS Type Approval • Bureau Veritas
• Functional Safety	SIL-2 suitable in accordance with IEC 61508/61511
Programming	
Intrinsically Safe Siemens handheld programmer	Infrared receiver
• Approvals for handheld programmer	IS model: ATEX II 1 GD Ex ia IIC T4 Ga Ex ia D 20 T135 °C T_a = -20 ... +50 °C CSA/FM Class I, II, III, Div. 1, Groups A, B, C, D, E, F, G, T6 T_a = +50 °C IECEx SIR 09.0073
Handheld communicator	HART communicator 375/475
PC	• SIMATIC PDM • Emerson AMS • SITRANS DTM (for connection into FDT such as PACTware or Fieldcare)
Display (local)	Graphic local user interface including quick start wizard and echo profile displays

© Siemens 2020

Selection and ordering data

	Article No.
SITRANS LR250 Radar level transmitter ↗	**7ML5431-**
Continuous, non-contact, 20 m (66 ft) range, for liquids and slurries.	■ ■ ■ ■ **0** - ■ ■ ■ ■
↗ Click on the Article No. for the online configuration in the PIA Life Cycle Portal.	
Process Connection and Antenna Material	
316L (1.4435 or 1.4404) stainless steel, PTFE emitter, FKM seal[1]	**0**
316L (1.4435 or 1.4404) stainless steel, PTFE emitter, FFKM seal[1]	**1**
Process Connection Type	
Threaded connection 316L	
1½" NPT (ASME B1.20.1) (tapered thread)[3]	**A A**
R 1½" [(BSPT), EN 10226-1] (tapered thread)[3]	**A B**
G 1½" [(BSPP), EN ISO 228-1] (parallel thread)[3]	**A C**
2" NPT (ASME B1.20.1) (tapered thread)[4]	**A D**
R 2" [(BSPT), EN 10226-1] (tapered thread)[4]	**A E**
G 2" [(BSPP), EN ISO 228-1] (parallel thread)[4]	**A F**
3" NPT (ASME B1.20.1) (tapered thread)[4]	**A G**
R 3" [(BSPT), EN 10226-1] (tapered thread)[4]	**A H**
G 3" [(BSPP), EN ISO 228-1] (parallel thread)[4]	**A J**
Flanged connection 316L	
2" Class 150 ASME B16.5, raised face[4]	**B D**
3" Class 150 ASME B16.5, raised face[4]	**B E**
4" Class 150 ASME B16.5, raised face[4]	**B F**
2" Class 300 ASME B16.5, raised face[4]	**C D**
3" Class 300 ASME B16.5, raised face[4]	**C E**
4" Class 300 ASME B16.5, raised face[4]	**C F**
50A 10K JIS B 2220 flat face[4]	**F A**
80A 10K JIS B 2220 flat face[4]	**F B**
100A 10K JIS B 2220 flat face[4]	**F C**
DN 50 PN 16 EN 1092-1 Type B1 raised face[4]	**G A**
DN 80 PN 16 EN 1092-1 Type B1 raised face[4]	**G B**
DN 100 PN 16 EN 1092-1 Type B1 raised face[4]	**G C**
DN 150 PN 16 EN 1092-1 Type B1 raised face[4]	**G D**
DN 50 PN 40 EN 1092-1 Type B1 raised face[4]	**H A**
DN 80 PN 40 EN 1092-1 Type B1 raised face[4]	**H B**
DN 100 PN 40 EN 1092-1 Type B1 raised face[4]	**H C**
DN 150 PN 40 EN 1092-1 Type B1 raised face[4]	**H D**
Communication/Output	
PROFIBUS PA[5]	**1**
4 ... 20 mA, HART, start-up at < 3.6 mA	**2**
FOUNDATION Fieldbus[5]	**3**
Enclosure/Cable inlet	
Aluminum, Epoxy painted	
2 x ½" NPT	**0**
2 x M20 x 1.5	**1**
Antenna	
1½" horn	**A**
2" horn (fits 2" ASME or DN 50 nozzles)	**B**
3" horn (fits 3" ASME or DN 80 nozzles)	**C**
4" horn (fits 4" ASME or DN 100 nozzles)	**D**
1½" horn with 100 mm extension	**E**
2" horn with 100 mm extension	**F**
3" horn with 100 mm extension	**G**
4" horn with 100 mm extension	**H**

	Article No.
SITRANS LR250 Radar level transmitter	**7ML5431-**
Continuous, non-contact, 20 m (66 ft) range, for liquids and slurries.	■ ■ ■ ■ **0** - ■ ■ ■ ■
Approvals	
General Purpose, CE, CSA, FM, FCC, RED, RCM	**A**
Intrinsically Safe: CSA/FM Class I, Div. 1, Groups A, B, C, D, Class II, Div. 1, Groups E, F, G, Class III T4 FCC, Industry Canada	**B**
Intrinsically Safe: IECEx/ATEX II 1 G Ex ia IIC T4 Ga, IECEx/ATEX II 1D Ex ia ta IIIC T100 °C Da, INMETRO Ex ia IIC T4 Ga, Ex ia ta IIIC T100 °C Da, CE, RED, RCM	**C**
Non-incendive: CSA/FM Class I, Div. 2, Groups A, B, C, D T5, FCC, Industry Canada	**D**
Non Sparking: ATEX II 3G Ex nA IIC T4 Gc, CE, RED, RCM	**E**
Increased Safety: IECEx/ATEX II 1/2 GD,1D, 2D Ex e mb ia IIC T4 Ga/Gb, Ex ia ta IIIC T100 °C Da, INMETRO Ex e ia mb IIC T4 Ga/Gb, Ex ia ta IIIC T100 °C Da, CE, RED, RCM[6]	**F**
Flameproof: IECEx/ATEX II 1/2 GD 1D, 2D Ex d mb ia IIC T4 Ga/Gb, Ex ia ta IIIC T100 °C Da INMETRO Ex d ia mb IIC T4 Ga/Gb, Ex ia ta IIIC T100 °C Da, CE, RED, RCM[6]	**G**
Explosion proof: CSA/FM Class I, II, and III, Div. 1, Groups A, B, C, D, E, F, G, FCC, Industry Canada[6]	**H**
Non Sparking: NEPSI Ex nA IIC T4 Gc	**K**
Intrinsically Safe: NEPSI Ex ia IIC T4 Ga, Ex iaD tD A20 IP67 T100 °C	**L**
Flameproof: NEPSI Ex d ia mb IIC T4 Ga/Gb, Ex iaD tD A20 IP67 T100 °C[6]	**M**
Increased Safety: NEPSI Ex e ia mb IIC T4 Ga/Gb, Ex iaD tD A20 IP67 T100 °C[6]	**N**
Pressure rating	
Rating per Pressure/Temperature curves in manual	**0**
0.5 bar g (7.25 psi g) maximum[7]	**1**

[1] Available with process connection options AA ... HD and Antenna Versions A ... H only.

[2] Available with process connection options JA ... MH and Antenna Versions J ... P only.

[3] Not available with Antenna options B, C, D, F, G, H.

[4] Not available with Antenna options A and E.

[5] Available with Approval options A, B, C, D, K, and L.

[6] Available only with Communications option 2.

[7] Available with Process Connection and Antenna Material 0, 1, 2, and 3 only.

© Siemens 2020

Selection and ordering data

	Order code
Further designs	
Please add "**-Z**" to Article No. and specify Order code(s).	
Plug M12 with mating Connector[1)2)3)]	**A50**
Plug 7/8" with mating Connector[2)3)4)]	**A55**
Stainless steel tag [69 x 50 mm (2.71 x 1.97 inch)]: Measuring-point number/identification (max. 27 characters); specify in plain text	**Y15**
Manufacturer's Test Certificate: M to DIN 55350, Part 18 and to ISO 9000	**C11**
Material inspection certificate 3.1 of EN 10204	**C12**
Functional Safety (SIL 2). Device suitable for use in accordance with IEC 61508 and IEC 61511[3)5)]	**C20**
Namur NE43 compliant, device preset to failsafe < 3.6 mA[5)]	**N07**
Operating Instructions	
All literature is available to download for free, in a range of languages, at	

http://www.siemens.com/processinstrumentation/documentation

	Article No
Accessories	
Handheld programmer, Intrinsically safe, EEx ia	**7ML1930-1BK**
HART modem/USB (for use with a PC and SIMATIC PDM)	**7MF4997-1DB**
One metallic cable gland M20 x 1.5, rated -40 ... +80 °C (-40 ... +176 °F), HART (two are required)	**7ML1930-1AP**
One metallic cable gland M20 x 1.5, rated -40 ... +80 °C (-40 ... +176 °F), PROFIBUS PA and FOUNDATION Fieldbus (two are required)[6)]	**7ML1930-1AQ**
FDA approved FKM O-ring for 2" G (BSPP) process connections -28 ... +80 °C (-28 ... +176 °F)	**7ML1830-3AN**
SITRANS RD100, loop powered display - see Chapter 7	**7ML5741-.....-.**
SITRANS RD150, remote digital display for 4 ... 20 mA and HART devices - see Chapter 7	**7ML5742-.....-....**
SITRANS RD200, universal input display with Modbus conversion - see Chapter 7	**7ML5740-.....-..**
SITRANS RD300, dual line display with totalizer and linearization curve and Modbus conversion - see Chapter 7	**7ML5744-.....-..**
For applicable back up point level switch - see point level measurement section	

1) Available with enclosure option 1 only.
2) To be used with communication options 1 and 3 only. Connector has IP67 rating.
3) Available with approval options A and B. Available with approval option C for use on intrinsically safe applications only. Not rated for dust Ex.
4) Available with enclosure option 0 only.
5) Applicable to communication option 2 only.
6) For use with communication options 1 and 3 only.

© Siemens 2020

Selection and ordering data

SITRANS LR250 Spare parts

	Article No.
SITRANS LR250 horn version enclosures (PROFIBUS PA models)	
SITRANS LR250 horn version enclosure with board stack, NPT cable inlet, approval option A, with PROFIBUS PA communication, no process connection	**A5E01156836**
SITRANS LR250 horn version enclosure with board stack, M20 cable inlet, approval option A, with PROFIBUS PA communication, no process connection	**A5E01156838**
SITRANS LR250 horn version enclosure with board stack, M20 cable inlet, approval option B, with PROFIBUS PA communication, no process connection	**A5E01156841**
SITRANS LR250 horn version enclosure with board stack, NPT cable inlet, approval option C, with PROFIBUS PA communication, no process connection	**A5E01156843**
SITRANS LR250 horn version enclosure with board stack, M20 cable inlet, approval option C, with PROFIBUS PA communication, no process connection	**A5E01156844**
SITRANS LR250 horn version enclosure with board stack, NPT cable inlet, approval option D, with PROFIBUS communication, no process connection	**A5E01156846**
SITRANS LR250 horn version enclosure with board stack, M20 cable inlet, approval option D, with PROFIBUS PA communication, no process connection	**A5E01156848**
SITRANS LR250 horn version enclosures (FOUNDATION Fieldbus models)	
SITRANS LR250 enclosure with board stack, NPT cable inlet, approval option B, with FOUNDATION Fieldbus communication, no process connection	**A5E03769538**
SITRANS LR250 enclosure with board stack, NPT cable inlet, approval option D, with FOUNDATION Fieldbus communication, no process connection	**A5E03769539**
SITRANS LR250 enclosure with board stack, M20 cable inlet, approval option E, with FOUNDATION Fieldbus communication, no process connection	**A5E03769543**
SITRANS LR250 horn version enclosure with board stack, M20 cable inlet, approval option C, with FOUNDATION Fieldbus communication, no process connection	**A5E02654608**
SITRANS LR250 horn version enclosure with board stack, NPT cable inlet, approval option A, with FOUNDATION Fieldbus communication, no process connection	**A5E02653792**
SITRANS LR250 horn version enclosure with board stack, M20 cable inlet, approval option A, with FOUNDATION Fieldbus communication, no process connection	**A5E02653793**
SITRANS LR250 horn version enclosure with board stack, NPT cable inlet, approval option C, with FOUNDATION Fieldbus communication, no process connection	**A5E02654606**

	Article No.
SITRANS LR250 horn version enclosures (< 3.6 mA start-up HART)	
SITRANS LR250 horn version enclosure with board stack, M20 cable inlet, approval option A, with HART communication start-up at < 3.6 mA, no process connection	**A5E02956317**
SITRANS LR250 horn version enclosure with board stack, M20 cable inlet, approval option C, with HART communication start-up at < 3.6 mA, no process connection	**A5E02956319**
SITRANS LR250 horn version enclosure with board stack, M20 cable inlet, approval option E, with HART communication start-up at < 3.6 mA, no process connection	**A5E02956320**
SITRANS LR250 horn version enclosure with board stack, M20 cable inlet, approval option F, with HART communication start-up at < 3.6 mA, no process connection	**A5E02956322**
SITRANS LR250 horn version enclosure with board stack, M20 cable inlet, approval option G, with HART communication start-up at < 3.6 mA, no process connection	**A5E02956323**
LR250 horn version enclosure with board stack, NPT cable inlet, approval option A, with HART communication start-up at < 3.6 mA, no process connection	**A5E03441096**
LR250 horn version enclosure with board stack, NPT cable inlet, approval option B, with HART communication start-up at < 3.6 mA, no process connection	**A5E03441097**
LR250 horn version enclosure with board stack, NPT cable inlet, approval option H, with HART communication start-up at < 3.6 mA, no process connection	**A5E03441099**
Sun shield for SITRANS LR250 enclosure, stainless steel	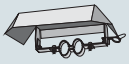
	A5E39142556
SITRANS LR250 horn antenna and extension kits	
38 mm (1.5 inch) horn antenna kit, 1.5 inch Process Connections only	**A5E01151539**
100 mm (4 inch) horn antenna extension kit, 1.5 inch process connections only	**A5E01151553**
50 mm (2 inch) stainless steel 316L horn antenna kit	**A5E01151569**
75 mm (3 inch) stainless steel 316L horn antenna kit	**A5E01151571**
100 mm (4 inch) stainless steel 316L horn antenna kit	**A5E01151573**
100 mm (4 inch) horn antenna extension kit, 50 mm (2 inch), 75 mm (3 inch), and 100 mm (4 inch) process connection	**A5E01151577**
5 Dupont 1Gr Polyback, PTFE grease kit	**A5E01151626**
SITRANS LR250 lid with O-ring	**A5E02465410**
Ex-proof plugs	
Ex-proof plugs kit, 1/2" NPT, qty 5	**A5E39979991**
Ex-proof plugs kit, M20, qty 5	**A5E39979992**

For special requests please consult a local sales person.
For more information, please visit
http://www.automation.siemens.com/aspa_app.

© Siemens 2020

Characteristic curves

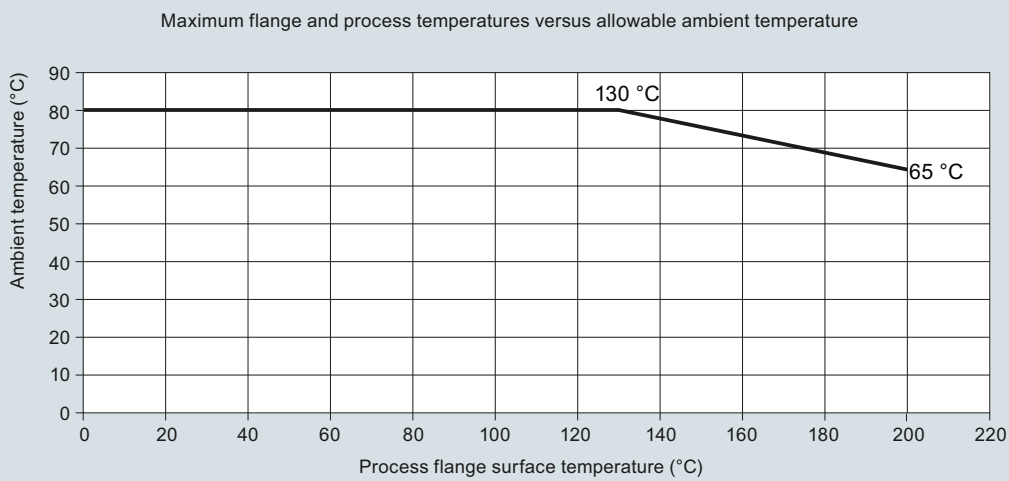

SITRANS LR250 ambient/process flange surface temperature curve

© Siemens 2020

Dimensional drawings

Threaded Horn Antenna

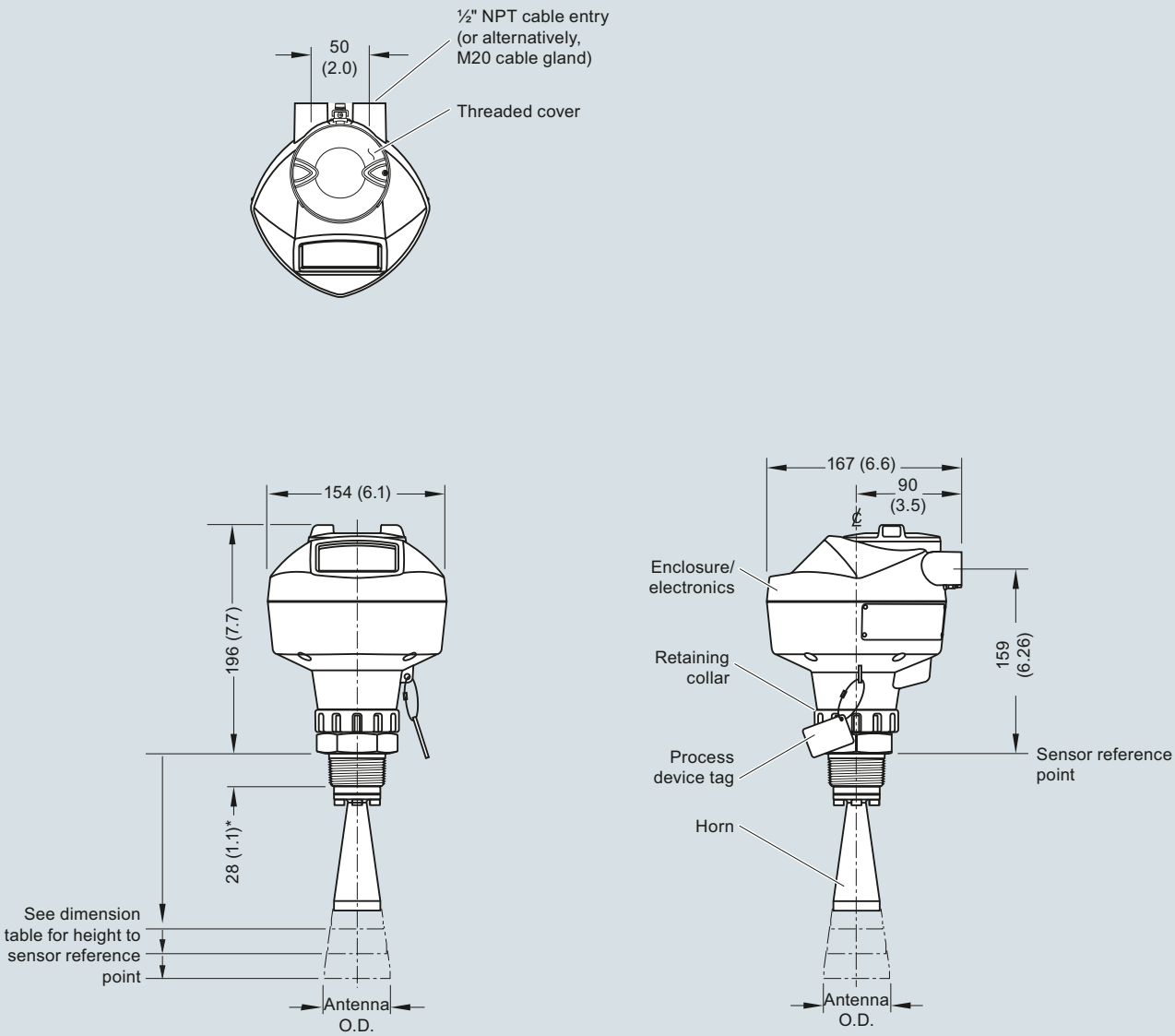

*28 mm (1.1) for 1.5 inch and 2 inch, 42 mm (1.65) for 3 inch

Antenna Type	Antenna O.D.	Height to sensor reference point			Beam angle	Measurement range
		1-1/2" threaded connection	2" threaded connection	3" threaded connection		
1.5" horn	39.8 (1.57)	135 (5.3)	N/A	N/A	19 degrees	10 m (32.8 ft)
2" horn	47.8 (1.88)	N/A	166 (6.55)	180 (7.09)	15 degrees	20 m (65.6 ft)
3" horn	74.8 (2.94)	N/A	199 (7.85)	213 (8.39)	10 degrees	20 m (65.6 ft)
4" horn	94.8 (3.73)	N/A	254 (10)	268 (10.55)	8 degrees	20 m (65.6 ft)

SITRANS LR250 Threaded Horn Antenna, dimensions in mm (inch)

© Siemens 2020

Dimensional drawings (continued)

Threaded Horn Antenna with Extension

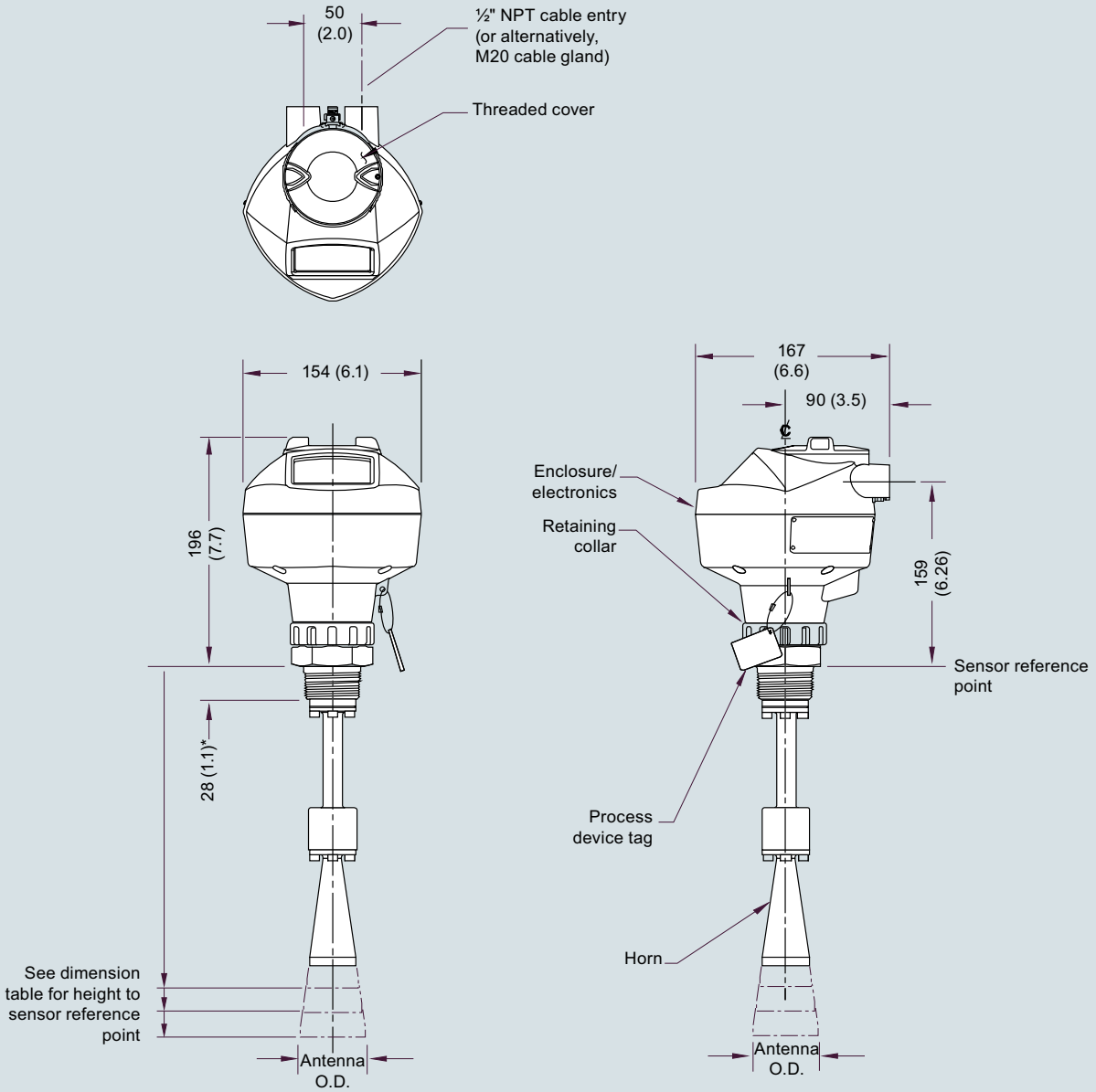

*28 mm (1.1) for 1.5 inch and 2 inch, 42 mm (1.65) for 3 inch

Antenna Type	Antenna O.D.	Height to sensor reference point			Beam angle	Measurement range
		1-1/2" threaded connection	2" threaded connection	3" threaded connection		
1.5" horn	39.8 (1.57)	235 (9.3)	N/A	N/A	19 degrees	10 m (32.8 ft)
2" horn	47.8 (1.88)	N/A	266 (10.47)	280 (11.02)	15 degrees	20 m (65.6 ft)
3" horn	74.8 (2.94)	N/A	299 (11.77)	313 (12.32)	10 degrees	20 m (65.6 ft)
4" horn	94.8 (3.73)	N/A	354 (13.94)	368 (14.49)	8 degrees	20 m (65.6 ft)

SITRANS LR250 Threaded Horn Antenna with extension, dimensions in mm (inch)

© Siemens 2020

Dimensional drawings (continued)

Flanged Horn

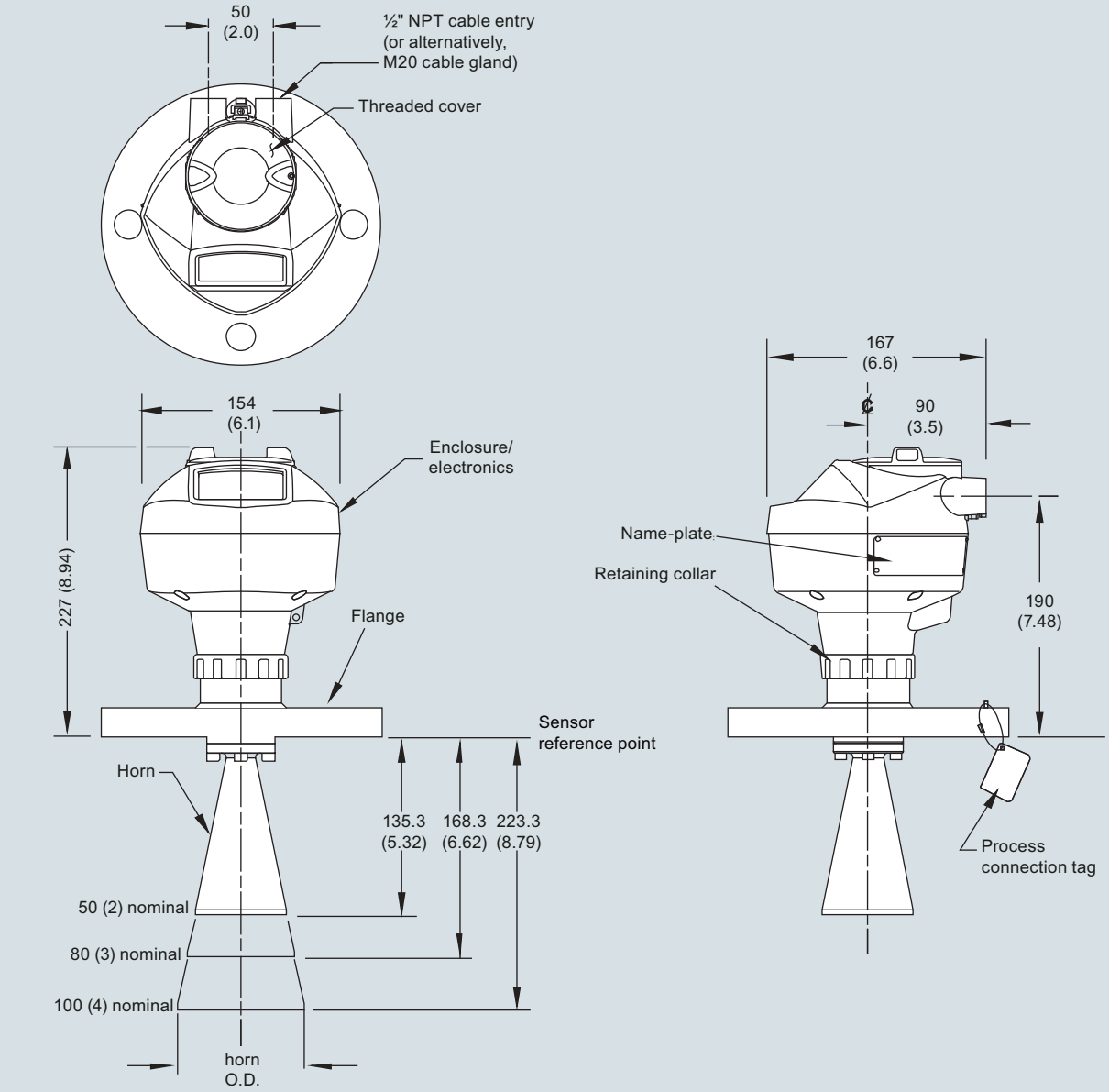

Nominal Horn Size	Horn O.D.	Height to sensor reference point		Beam angle	Measurement range
		Stainless steel flange raised or flat-faced	Optional alloy flange		
50 (2)	47.8 (1.88)	135.3 (5.32)	138.3 (5.44)	15 degrees	20 m (65.6 ft)
80 (3)	74.8 (2.94)	168.3 (6.62)	171.3 (6.74)	10 degrees	20 m (65.6 ft)
100 (4)	94.8 (3.73)	223.3 (8.79)	226.3 (8.90)	8 degrees	20 m (65.6 ft)

SITRANS LR250 Flanged Horn Antenna, dimensions in mm (inch)

© Siemens 2020

Dimensional drawings (continued)

Flanged Horn with Extension

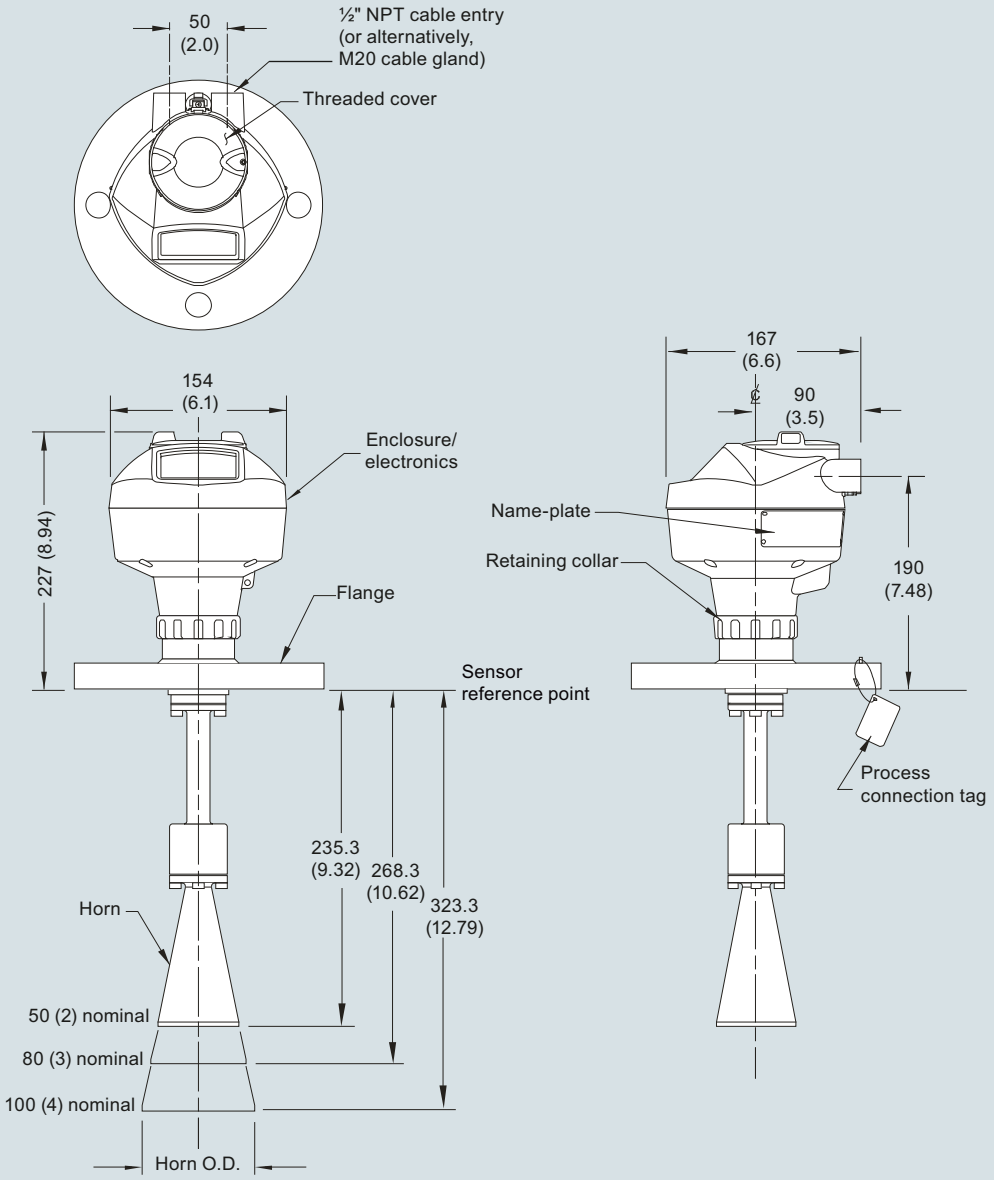

Nominal Horn Size	Horn O.D.	Height to sensor reference point		Beam angle	Measurement range
		Stainless steel flange raised or flat-faced	Optional alloy flange		
50 (2)	47.8 (1.88)	235.3 (9.26)	238.3 (9.38)	15 degrees	20 m (65.6 ft)
80 (3)	74.8 (2.94)	268.3 (10.56)	271.3 (10.68)	10 degrees	20 m (65.6 ft)
100 (4)	94.8 (3.73)	323.3 (12.73)	326.3 (12.85)	8 degrees	20 m (65.6 ft)

SITRANS LR250 Flanged Horn Antenna with extension, dimensions in mm (inch)

© Siemens 2020

Circuit diagrams

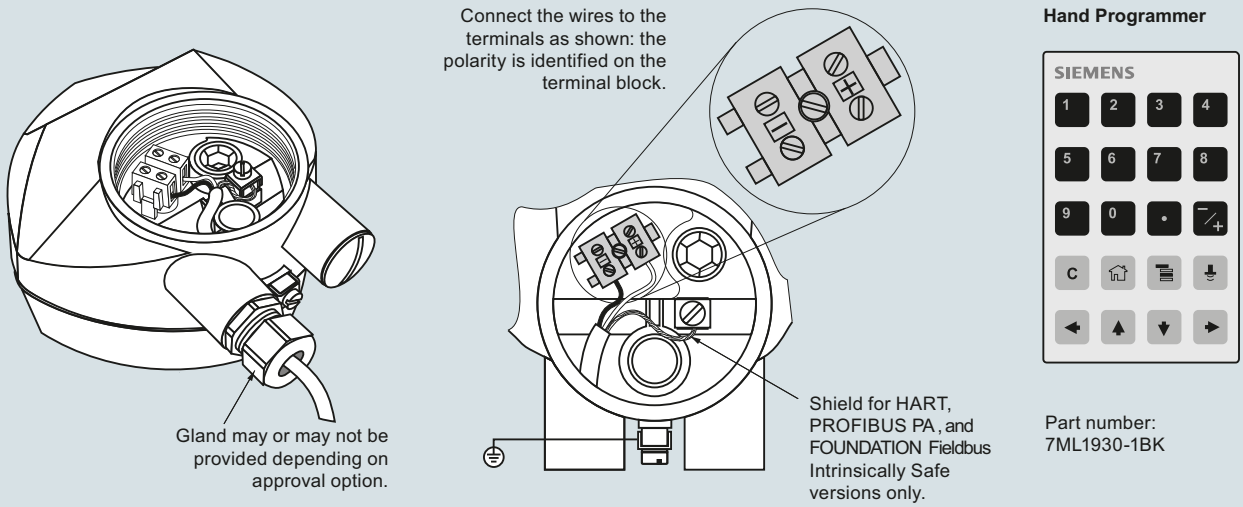

Notes:

1. DC terminal shall be supplied from a source providing electrical isolation between the input and output, to meet the applicable safety requirements of IEC 61010-1.
2. All field wiring must have insulation suitable for rated input voltages.
3. Use shielded twisted pair cable (14 ... 22 AWG) for HART version.
4. Separate cables and conduit may be required to conform to standard instrumentation wiring practices or electrical codes.

SITRANS LR250 connections

© Siemens 2020

SITRANS LR250 Polypropylene Lens Antenna

Overview

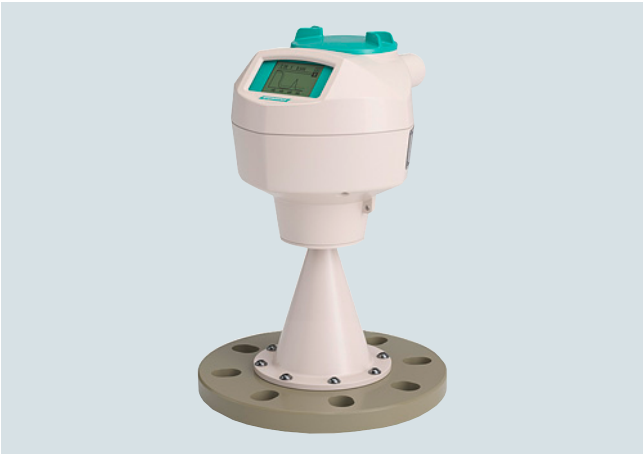

SITRANS LR250 Polypropylene lens antenna is a 25 GHz pulse radar level transmitter for continuous monitoring of liquids and slurries in storage and process vessels including corrosive materials to a range of 20 m (65.6 ft).

Benefits

- For use in chemical environments where aggressive and corrosive materials are present.
- Graphical local user interface (LUI) makes operation simple with plug-and-play setup using the intuitive Quick Start Wizard
- LUI displays echo profiles for diagnostic support
- Communication using HART, PROFIBUS PA, or FOUNDATION Fieldbus
- Process Intelligence signal processing for improved measurement reliability and Auto False-Echo Suppression of fixed obstructions
- Programming using infrared, Intrinsically Safe, handheld programmer or over a network using SIMATIC PDM, Emerson AMS, or Field Device Tools such as PACTware or Fieldcare via SITRANS DTM
- 3 mm (0.118 inch) accuracy in accordance with IEC 60770-1

Application

SITRANS LR250 includes a graphical local user interface (LUI) that improves setup and operation by including an intuitive Quick Start Wizard, and echo profile displays for diagnostic support. Startup is easy using the Quick Start wizard with a few parameters required for basic operation.

SITRANS LR250's unique design allows safe and simple programming using the Intrinsically Safe handheld programmer without having to open the instrument's lid.

- Key Applications: liquid bulk storage tanks, process vessels with agitators, vaporous liquids, corrosive and aggressive materials.

© Siemens 2020

Configuration

Installation of SITRANS LR250 Level Probing Radar

Note:
- Beam angle is the width of the cone where the energy density is half of the peak energy density.
- The peak energy density is directly in front of and in line with the antenna.
- There is a signal transmitted outside of the beam angle; therefore false targets may be detected.

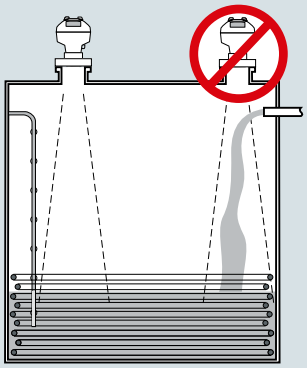

Polypropylene lens antenna

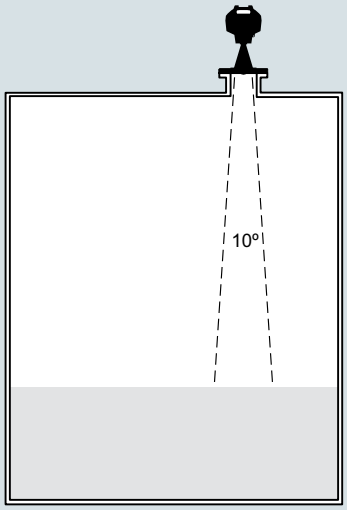

Mounting on vessel

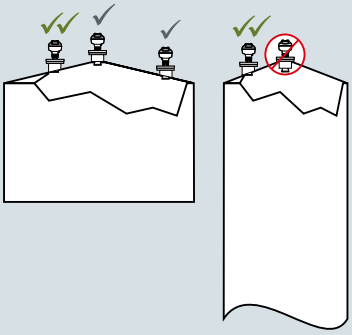

SITRANS LR250 Polypropylene lens antenna installation

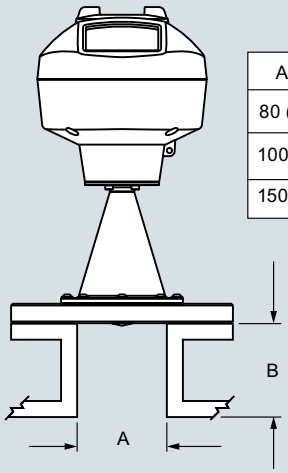

A	B
80 (3)	500 (20) max.
100 (4)	500 (20) max.
150 (6)	500 (20) max.

SITRANS LR250 Polypropylene lens antenna, mounting on a nozzle, dimensions in mm (inch)

© Siemens 2020

Technical specifications

Mode of operation	
Measuring principle	Radar level measurement
Frequency	K-band (25.0 GHz)
Minimum measuring range	50 mm (2 inch) from end of antenna
Maximum measuring range	20 m (66 ft)
Output	
HART	Version 5.1
• Analog output	4 ... 20 mA
• Accuracy	± 0.02 mA
• Fail-safe	• Programmable as high, low or, hold (loss of echo) • NE 43 programmable
PROFIBUS PA	Profile 3.1
• Function blocks	2 Analog Input (AI)
FOUNDATION Fieldbus	H1
• Functionality	Basic or LAS
• Version	ITK 5.2.0
• Function blocks	2 Analog Input (AI)
Performance (according to reference conditions IEC 60770-1)	
Maximum measured error	• > 500 mm from sensor reference point: 3 mm (0.118 inch) • < 500 mm from sensor reference point: 25 mm (1 inch)
Influence of ambient temperature	< 0.003 %/K
Rated operating conditions	
Installation conditions	
• Location	Indoor/outdoor
Ambient conditions (enclosure)	
• Ambient temperature	-40 ... +80 °C (-40 ... +176 °F)
• Storage temperature	-40 ... +80 °C (-40 ... +176 °F)
• Installation category	I
• Pollution degree	4
Medium conditions	
Dielectric constant ε_r	> 1.6
Process temperature	-40 ... +80 °C (-40 ... +176 °F) at process connection
Process pressure	Up to 5 bar g (72 psi g) temperature dependent.
Design	
Enclosure	
• Material	Aluminum, polyester powder-coated
• Cable inlet	2 x M20 x 1.5 or 2 x ½" NPT
Degree of protection	Type 4X/NEMA 4X, Type 6/NEMA 6, IP67, IP68
Weight	Polypropylene lens antenna with 3 inch (80 mm) polypropylene flange • Approximately 3.4 kg (7.5 lb)
Display (local)	Graphic local user interface including quick start wizard and echo profile display
Polypropylene lens antenna	
• Materials	• Polyester powder coated exterior • 3 inch cast aluminum • Polypropylene lens • FKM seal
• Process connections	
- Material	Polypropylene
- Dimensions	Universal flange: 3 inch (80 mm), 4 inch (100 mm), 6 inch (150 mm)

Power supply	
4 ... 20 mA/HART	Nominal 24 V DC (max. 30 V DC) with max. 550 Ω
PROFIBUS PA	• 15 mA • per IEC 61158-2
FOUNDATION Fieldbus	• 20.0 mA • per IEC 61158-2
Certificates and approvals	
General	$CSA_{US/C}$, CE, FM, RCM
Radio	FCC, Industry Canada, RED, RCM
Hazardous	
• Explosion Proof (Brazil)	INMETRO Ex d ia mb IIC T4 Ga/Gb, Ex ia ta IIIC T100 °C Da
• Increased Safety (Brazil)	INMETRO Ex e ia mb IIC T4 Ga/Gb, Ex ia ta IIIC T100 °C Da
• Intrinsically Safe (Brazil)	INMETRO Ex ia IIC T4 Ga, Ex ia ta IIIC T100 °C Da
• Explosion Proof (Canada/USA)	CSA/FM Class I, Div. 1, Groups A, B, C, D; Class II, Div. 1, Groups E, F, G; Class III T4
• Intrinsically Safe (Canada/USA)	CSA/FM Class I, Div. 1, Groups A, B, C, D; Class II, Div. 1, Groups E, F, G; Class III T4
• Non-incendive (Canada/USA)	CSA/FM Class I, Div. 2, Groups A, B, C, D T5
• Flame Proof/Increased Safety (China)	Ex d ia mb IIC T4 Ga/Gb, Ex e ia mb IIC T4 Ga/Gb, Ex iaD 20 T90 IP67 DIP A20 T_A90 °C
• Intrinsically Safe (China)	Ex ia IIC T4 Ga, Ex iaD 20 T90 IP67 DIP A20 T_A90 °C
• Non-sparking (China)	NEPSI Ex nA IIC T4 Gc
• Intrinsically Safe (Europe)	ATEX II 1G Ex ia IIC T4 Ga, ATEX II 1D Ex ia ta IIC T100 °C Da
• Non-sparking/Energy Limited (Europe)	ATEX II 3G Ex nA IIC T4 Gc
• Flame Proof (International/Europe)	IECEx/ATEX II ½ GD, 1D, 2D, Ex d mb ia IIC T4 Ga/Gb, Ex ia ta IIC T100 °C Da
• Increased Safety (International/Europe)	IECEx/ATEX II ½ GD, 1D, 2D, Ex e mb ia IIC T4 Ga/Gb, Ex ia ta IIIC T100 °C Da
• Intrinsically Safe (International)	IECEx/ATEX II 1 G Ex ia IIC T4 Ga, IECEX/ATEX II 1D Ex ia ta IIC T100 ° C Da
• Explosion Proof (Russia/Kazakhstan)	EAC Ex d
• Increased Safety (Russia/Kazakhstan)	EAC Ex e
• Intrinsically Safe (Russia/Kazakhstan)	EAC Ex ia
• Marine	• Lloyd's Register of Shipping • ABS Type Approval • Bureau Veritas
Programming	
Intrinsically Safe Siemens handheld programmer	Infrared receiver
• Approvals for handheld programmer	IS model: ATEX II 1 GD Ex ia IIC T4 Ga, Ex ia D 20 T135 °C T_a = -20 ... +50 °C, CSA/FM Class I, II, III, Div. 1, Groups A, B, C, D, E, F, G, T6, T_a = +50 °C, IECEx SIR 09.0073
Handheld communicator	HART communicator 375/475
PC	• SIMATIC PDM • Emerson AMS • SITRANS DTM (for connection into FDT, such as PACTware or Fieldcare)
Display (local)	Graphic local user interface including quick start wizard and echo profile displays.

© Siemens 2020

Selection and ordering data

	Article No.
SITRANS LR250 Radar level transmitter ↗	**7ML5431-**
Continuous, non-contact, 20 m (66 ft) range, for liquids and slurries.	■ ■ ■ ■ **0** - ■ ■ ■ ■
↗ Click on the Article No. for the online configuration in the PIA Life Cycle Portal.	
Process Connection and Antenna Material	
Painted aluminum 3" horn antenna[1]	**5**
Process Connection Type	
Engineered polymer flange connections	
Without flange, without mounting bracket, no polypropylene lens	**Q A**
Without flange, with mounting bracket, no polypropylene lens	**Q B**
Universal polymeric flange, flat face, with polypropylene lens, FKM seal	
DN80 PN16, ANSI 3", 150 lb, DN80 PN16/10K	**Q C**
DN100 PN16, ANSI 4", 150 lb, DN100 PN16/10K	**Q D**
DN150 PN16, ANSI 6", 150 lb, DN150 PN16/10K	**Q E**
Communication/Output	
PROFIBUS PA	**1**
4 ... 20 mA, HART, start-up at < 3.6 mA	**2**
FOUNDATION Fieldbus	**3**
Enclosure/Cable inlet	
Aluminum, Epoxy painted	
2 x ½" NPT	**0**
2 x M20 x 1.5	**1**
Antenna	
3 inch (80 mm) polypropylene lens antenna	**S**
Approvals	
General Purpose, CE, CSA, FM, FCC, RED, RCM	**A**
Intrinsically Safe: CSA/FM Class I, Div. 1, Groups A, B, C, D, Class II, Div. 1, Groups E, F, G, Class III T4 FCC, Industry Canada	**B**
Intrinsically Safe: IECEx/ATEX II 1 G Ex ia IIC T4 Ga, IECEx/ATEX II 1D Ex ia ta IIIC T100 °C Da, INMETRO Ex ia IIC T4 Ga, Ex ia ta IIIC T100 °C Da, CE, RED, RCM	**C**
Non-incendive: CSA/FM Class I, Div. 2, Groups A, B, C, D T5, FCC, Industry Canada	**D**
Non Sparking: ATEX II 3G Ex nA IIC T4 Gc, CE, RED, RCM	**E**
Increased Safety: IECEx/ATEX II ½ GD,1D, 2D Ex e mb ia IIC T4 Ga/Gb, Ex ia ta IIIC T100 °C Da, INMETRO Ex e ia mb IIC T4 Ga/Gb, Ex ia ta IIIC T100 °C Da, CE, RED, RCM[2]	**F**
Flameproof: IECEx/ATEX II ½ GD 1D, 2D Ex d mb ia IIC T4 Ga/Gb, Ex ia ta IIIC T100 °C Da, INMETRO Ex d ia mb IIC T4 Ga/Gb, Ex ia ta IIIC T100 °C Da, CE, RED, RCM[2]	**G**
Explosion proof: CSA/FM Class I, II and III, Div. 1, Groups A, B, C, D, E, F, G, FCC, Industry Canada[2]	**H**
Non Sparking: NEPSI Ex nA IIC T4 Gc	**K**
Intrinsically Safe: NEPSI Ex ia IIC T4 Ga, Ex iaD 20 T90 IP67 DIP A20 T_A90 °C	**L**
Flameproof: NEPSI Ex d ia mb IIC T4 Ga/Gb, Ex iaD 20 T90 IP67 DIP A20 T_A90 °C[2]	**M**
Increased Safety: NEPSI Ex e ia mb IIC T4 Ga/Gb, Ex iaD 20 T90 IP67 DIP A20 T_A90 °C[2]	**N**
Pressure rating	
0.5 bar (7.25 psi g) max.	**1**
Rating per Pressure/Temperature curves in manual[3]	**2**

	Order code
Further designs	
Please add "**-Z**" to Article No. and specify Order code(s).	
Plug M12, incl. cable socket, IP68[4)5)6)]	**A50**
Plug 7/8", incl. cable socket, IP68[5)6)7)]	**A55**
Long tag (device parameter, max. 27 characters) plate stainless steel 304/1.4301	**Y15**
Factory test certificate - M to DIN 55350, Part 18	**C11**
Inspection certificate 3.1 (EN 10204) - material of pressure-containing and wetted parts	**C12**
Namur NE43 compliant: device preset to failsafe < 3.6 mA[2]	**N07**
Operating Instructions	
All literature is available to download for free, in a range of languages, at	
http://www.siemens.com/processinstrumentation/documentation	

Accessories	Article No.
Mounting bracket suitable for wall or ceiling mounting, for aluminum painted horn versions only	**A5E46342367**
Polypropylene lens replacement kit, polypropylene lens antenna and polymeric flange versions	**A5E46342366**
One metallic cable gland M20 x 1.5, rated -40 ... +80 °C (-40 ... +176 °F), HART[9]	**7ML1930-1AP**
One metallic cable gland M20 x 1.5, rated -40 ... +80 °C (-40 ... +176 °F), PROFIBUS PA and FOUNDATION Fieldbus	**7ML1930-1AQ**
Handheld programmer, Intrinsically safe, EEx ia	**7ML1930-1BK**
HART modem/USB (for use with a PC and SIMATIC PDM)	**7MF4997-1DB**
FDA approved FKM o-ring for 2" G (BSPP) process connections -28 ... +80 °C (-28 ... +176 °F)	**7ML1830-3AN**
SITRANS RD100, loop powered display - see Chapter 7	**7ML5741-.....-.**
SITRANS RD150, remote digital display for 4 ... 20 mA and HART devices - see Chapter 7	**7ML5742-.....-....**
SITRANS RD200, universal input display with Modbus conversion - see Chapter 7	**7ML5740-.....-..**
SITRANS RD300, dual line display with totalizer and linearization curve and Modbus conversion - see Chapter 7	**7ML5744-.....-..**
For applicable back up point level switch - see point level measurement section	

1) Available only with Process connection options QA ... QE and Antenna option S.
2) Available only with Communication option 2 and Process connection and antenna material option 4.
3) Available only with Process connection and Antenna material option 5 and Process connection type option QC.
4) Available only with Enclosure option 1.
5) Available only with Communication options 1 and 3.
6) Available only with Approval options A, B, C, and L.
7) Available only with Enclosure option 0.
8) Available only with Approval options A, B, C, D, E, K, and L.
9) Product shipped with plastic cable gland, rated to -20 °C (-4 °F). If -40 °C (-40 °F) rating required, then metallic cable gland is recommended.

© Siemens 2020

Selection and ordering data

SITRANS LR250 Polypropylene Lens Antenna Specials

	Article No.
SITRANS LR250 threaded PVDF antenna version enclosures (PROFIBUS PA models)	
SITRANS LR250 threaded PVDF antenna version enclosure with board stack, M20 cable inlet, approval option A, with PROFIBUS PA communication, no process connection	**A5E03588171**
SITRANS LR250 threaded PVDF antenna version enclosure with board stack, NPT cable inlet, approval option A, with PROFIBUS PA communication, no process connection	**A5E03588253**
SITRANS LR250 threaded PVDF antenna version enclosure with board stack, NPT cable inlet, approval option B, with PROFIBUS PA communication, no process connection	**A5E03588512**
SITRANS LR250 threaded PVDF antenna version enclosure with board stack, M20 cable inlet, approval option C, with PROFIBUS PA communication, no process connection	**A5E03589260**
SITRANS LR250 threaded PVDF antenna version enclosure with board stack, NPT cable inlet, approval option D, with PROFIBUS PA communication, no process connection	**A5E03589262**
SITRANS LR250 threaded PVDF antenna version enclosure with board stack, M20 cable inlet, approval option E, with PROFIBUS PA communication, no process connection	**A5E03589264**
SITRANS LR250 threaded PVDF antenna version enclosures (FOUNDATION Fieldbus models)	
SITRANS LR250 enclosure with board stack, M20 cable inlet, approval option A, with FOUNDATION Fieldbus communication, no process connection	**A5E03589266**
SITRANS LR250 enclosure with board stack, NPT cable inlet, approval option A, with FOUNDATION Fieldbus communication, no process connection	**A5E03589275**
SITRANS LR250 enclosure with board stack, NPT cable inlet, approval option B, with FOUNDATION Fieldbus communication, no process connection	**A5E03589277**
SITRANS LR250 enclosure with board stack, M20 cable inlet, approval option C, with FOUNDATION Fieldbus communication, no process connection	**A5E03589280**
SITRANS LR250 enclosure with board stack, NPT cable inlet, approval option D, with FOUNDATION Fieldbus communication, no process connection	**A5E03589281**
SITRANS LR250 enclosure with board stack, M20 cable inlet, approval option E, with FOUNDATION Fieldbus communication, no process connection	**A5E03589283**

	Article No.
SITRANS LR250 threaded PVDF antenna version enclosures (< 3.6 mA start-up HART models)	
SITRANS LR250 enclosure with board stack, M20 cable inlet, approval option A, with HART communication start-up at < 3.6 mA, no process connection	**A5E03569747**
SITRANS LR250 enclosure with board stack, NPT cable inlet, approval option A, with HART communication start-up at < 3.6 mA, no process connection	**A5E03586807**
SITRANS LR250 enclosure with board stack, NPT cable inlet, approval option B, with HART communication start-up at < 3.6 mA, no process connection	**A5E03586854**
SITRANS LR250 enclosure with board stack, M20 cable inlet, approval option C, with HART communication start-up at < 3.6 mA, no process connection	**A5E03586887**
SITRANS LR250 enclosure with board stack, NPT cable inlet, approval option D, with HART communication start-up at < 3.6 mA, no process connection	**A5E03586961**
SITRANS LR250 enclosure with board stack, M20 cable inlet, approval option E, with HART communication start-up at < 3.6 mA, no process connection	**A5E03587012**
SITRANS LR250 enclosure with board stack, M20 cable inlet, approval option F, with HART communication start-up at < 3.6 mA, no process connection	**A5E03587132**
SITRANS LR250 enclosure with board stack, M20 cable inlet, approval option G, with HART communication start-up at < 3.6 mA, no process connection	**A5E03587223**
SITRANS LR250 enclosure with board stack, NPT cable inlet, approval option H, with HART communication start-up at < 3.6 mA, no process connection	**A5E03588125**
SITRANS LR250 threaded PVDF antenna kits	
Antenna kit 2" NPT threaded PVDF	**A5E03528941**
Antenna kit 2" R (BSPT) threaded PVDF	**A5E03528943**
Antenna kit 2" G (BSPP) threaded PVDF	**A5E03528947**
Kit of hardware parts for LR250 threaded PVDF antenna: consists of O-rings, screws, wavewasher, and loctite	**A5E03528948**
Ex-proof plugs	
Ex-proof plugs kit, 1/2" NPT, qty 5	**A5E39979991**
Ex-proof plugs kit, M20, qty 5	**A5E39979992**

© Siemens 2020

Options

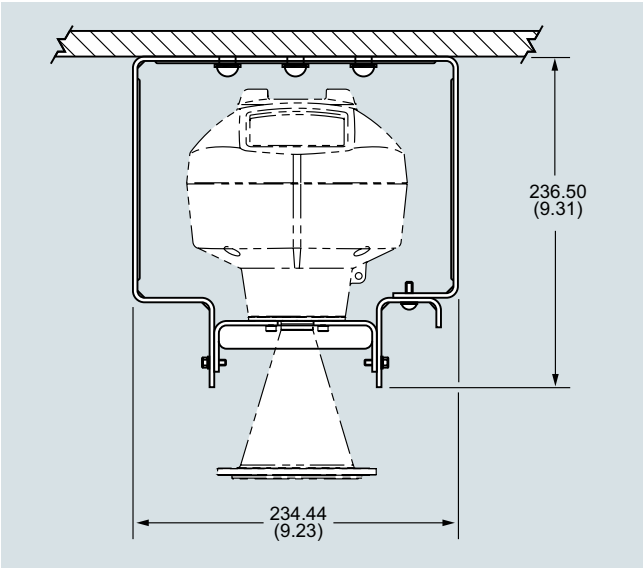

SITRANS LR250 Polypropylene lens antenna, wall/ceiling mount

Dimensional drawings

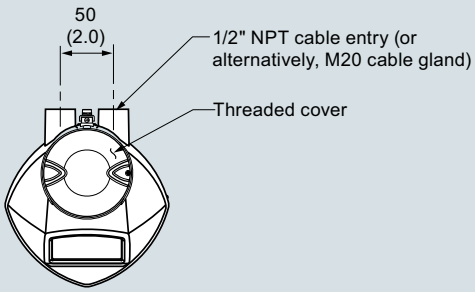

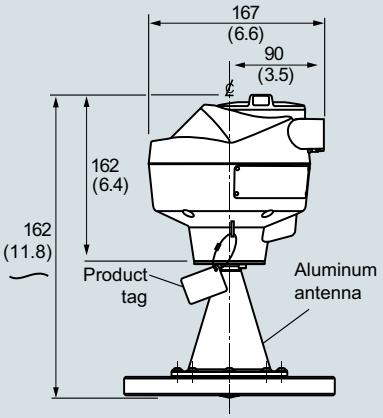

Nominal pipe size	OD ± 1	B.C.D. max. for slotted holes (bmax.) ± 0.75	B.C.D. min. for slotted holes (bmin.) ± 0.75	Bolt hole radius ± 0.25	Number of slotted holes
3	200	160	150	R 9.5	8
4	229	191	175	R 9.5	8
6	285	242	240	R 11.5	8

Polypropylene Flange

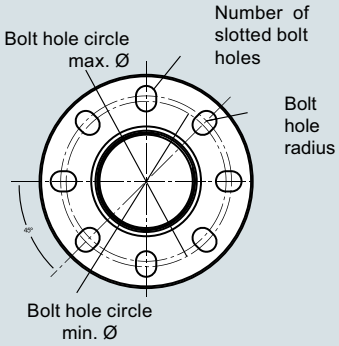

SITRANS LR250 Polypropylene lens antenna, dimensions in mm (inch)

© Siemens 2020

Dimensional drawings (continued)

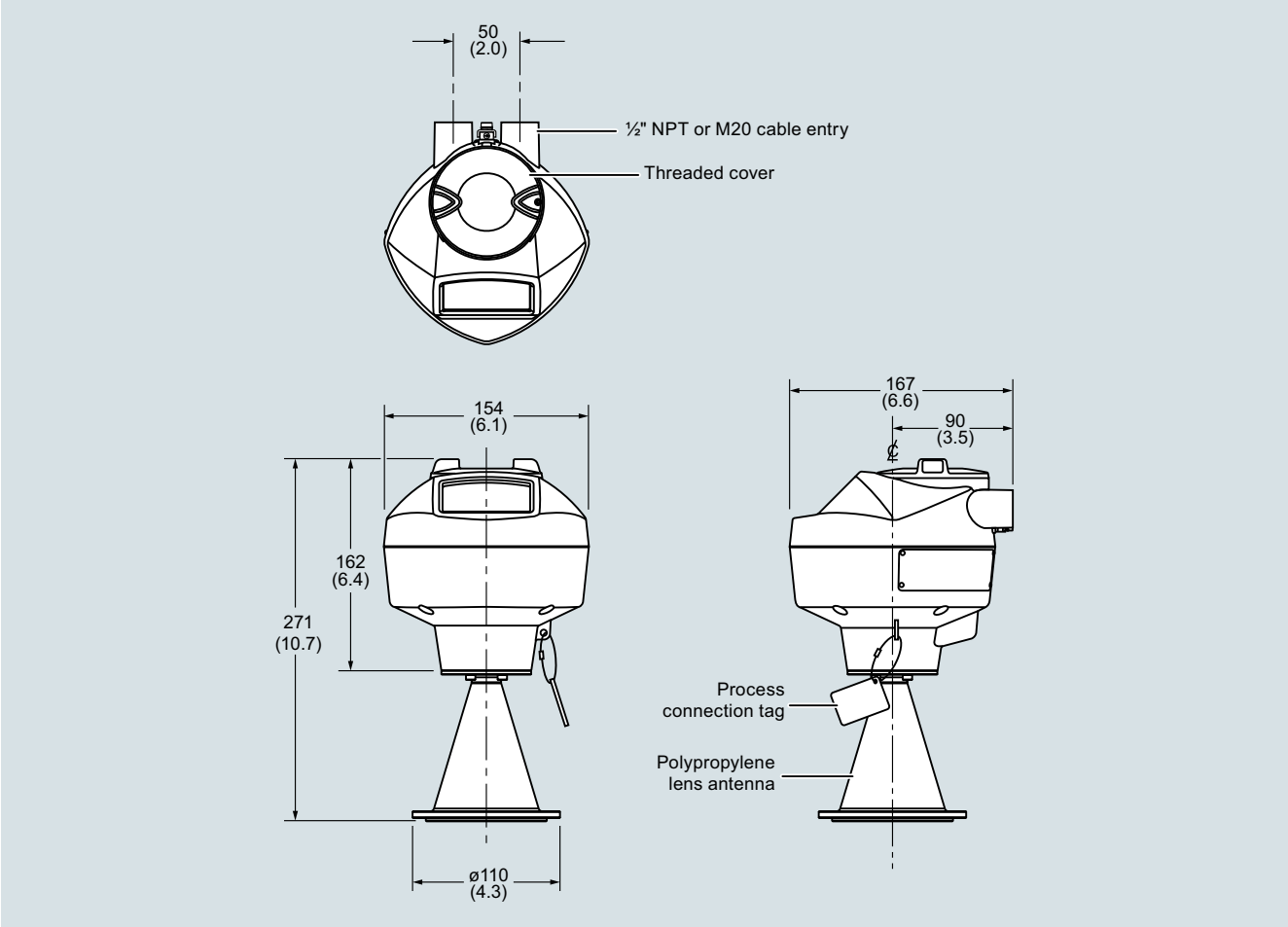

SITRANS LR250 Polypropylene lens antenna, dimensions in mm (inch)

© Siemens 2020

Dimensional drawings (continued)

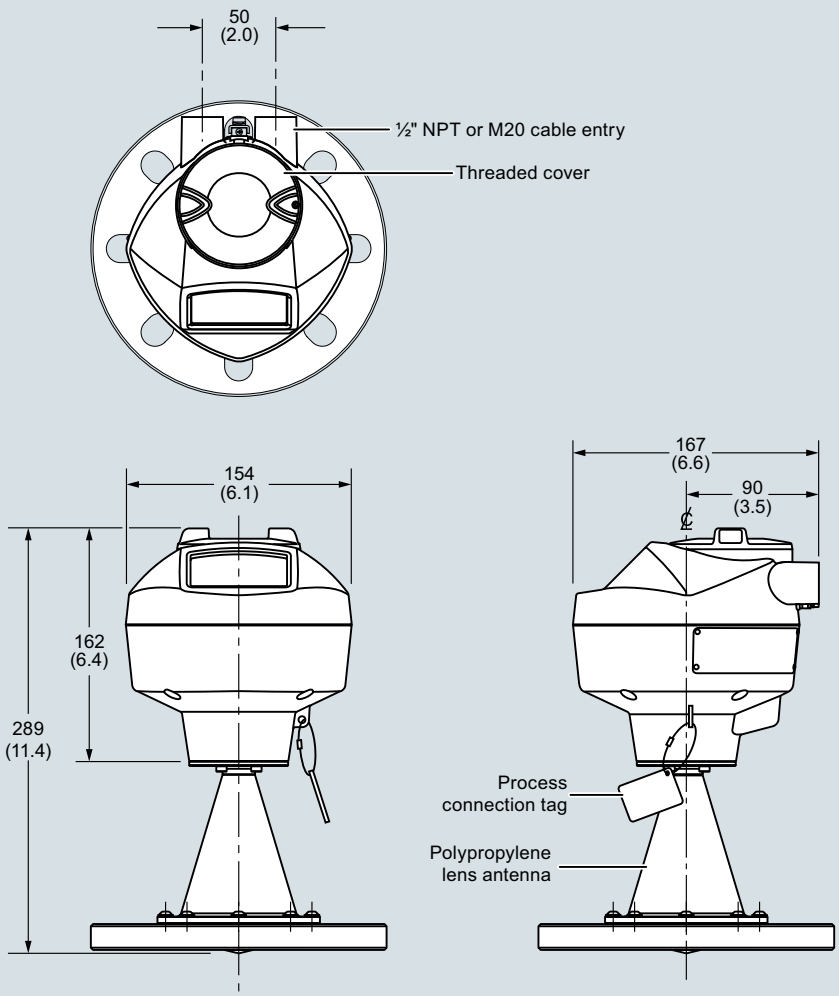

Universal polymeric flange

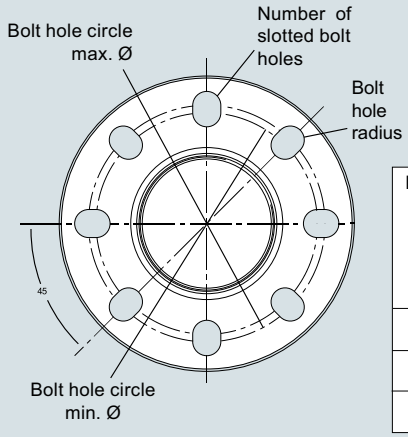

Nominal pipe size	OD ± 1	B.C.D. max. for slotted holes (bmax.) ± 0.75	B.C.D. min. for slotted holes (bmin.) ± 0.75	Bolt hole radius ± 0.25	# of slotted holes
3 (80)	7.87 (200)	6.30 (160)	5.91 (150)	0.37 (9.5)	8
4 (100)	9.00 (229)	17.52 (191)	6.89 (175)	0.37 (9.5)	8
6 (150)	11.22 (285)	9.53 (242)	9.45 (140)	0.45 (11.5)	8

SITRANS LR250 Polypropylene lens antenna with universal polymeric flange, dimensions in mm (inch)

© Siemens 2020

Circuit diagrams

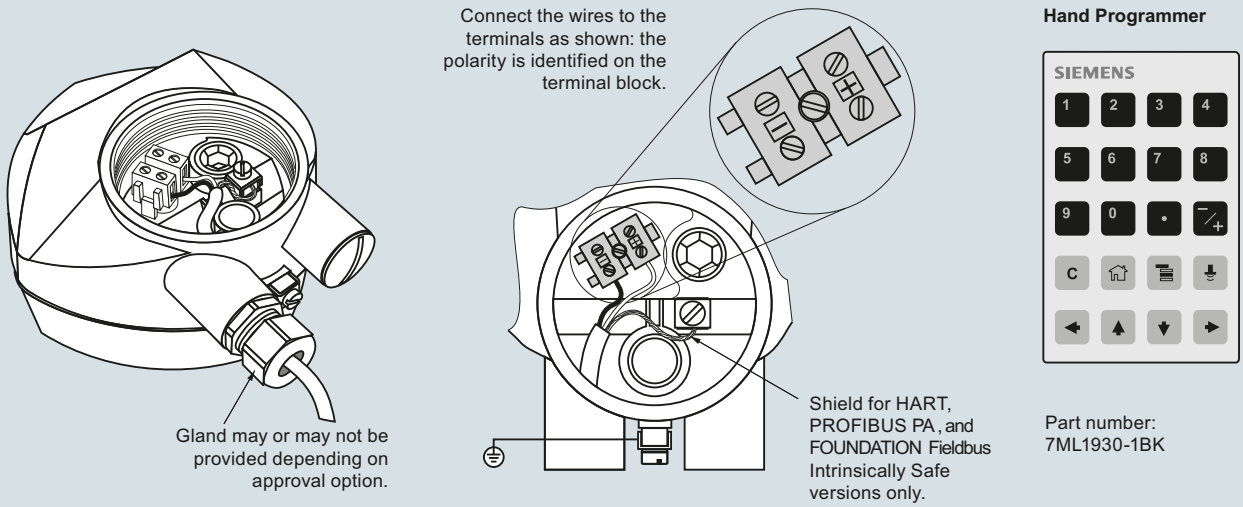

Notes:

1. DC terminal shall be supplied from a source providing electrical isolation between the input and output, to meet the applicable safety requirements of IEC 61010-1.
2. All field wiring must have insulation suitable for rated input voltages.
3. Use shielded twisted pair cable (14 ... 22 AWG) for HART version.
4. Separate cables and conduit may be required to conform to standard instrumentation wiring practices or electrical codes.

SITRANS LR250 connections

© Siemens 2020

Overview

SITRANS LR250 with flanged encapsulated antenna is a 2-wire, 25 GHz pulse radar level transmitter for continuous monitoring of liquids and slurries in storage and process vessels including corrosives or aggressive materials, to a range of 20 m (66 ft) (antenna dependent).

Benefits

- Fully encapsulated horn antenna design with FDA approved TFM 1600 PTFE lens for use in chemical and sanitary environments where aggressive and corrosive materials are used
- Cost effective replacement for transmitters made of exotic materials
- Graphical local user interface (LUI) makes operation simple with plug-and-play setup using the intuitive Quick Start Wizard
- LUI displays echo profiles for diagnostic support
- 25 GHz high frequency and 50 mm (2 inch) process connection/antenna allow for easy mounting
- Insensitive to mounting location and obstructions, and less sensitive to nozzle interference
- Short blanking distance for improved minimum measuring range to 50 mm (2 inch) from the end of the antenna
- Communication using HART, PROFIBUS PA, or FOUNDATION Fieldbus
- Process Intelligence signal processing for improved measurement reliability and Auto False-Echo Suppression of fixed obstructions
- Programming using infrared Intrinsically Safe handheld programmer or over a network using SIMATIC PDM, Emerson AMS, or Field Device Tools such as PACTware or Fieldcare via SITRANS DTM
- Functional Safety (SIL 2). Device suitable for use in accordance with IEC 61508 and IEC 61511
- Suitable for API 2350

Application

SITRANS LR250 includes a graphical local user interface (LUI) that improves setup and operation by including an intuitive Quick Start Wizard, and echo profile displays for diagnostic support. Startup is easy using Quick Start Wizard with a few parameters required for basic operation.

The 25 GHz frequency creates a narrow, focused beam allowing for smaller antenna options and decreasing sensitivity to obstructions.

SITRANS LR250's unique design allows safe and simple programming using the Intrinsically Safe handheld programmer without having to open the instrument's lid.

SITRANS LR250 measures superbly in small vessels and in tanks/vessels up to 20 m (66 ft) on materials with dk > 1.6.

- Key Applications: liquid bulk storage tanks, process vessels with agitators, vaporous liquids, temperatures to 170 °C (338 °F), corrosive and aggressive materials and applications where ease of cleaning is required such as food or fine chemicals

Configuration

Installation

Note:
- Beam angle is the width of the cone where the energy density is half of the peak energy density.
- The peak energy density is directly in front of and in line with the antenna.
- There is a signal transmitted outside of the beam angle; therefore false targets may be detected.

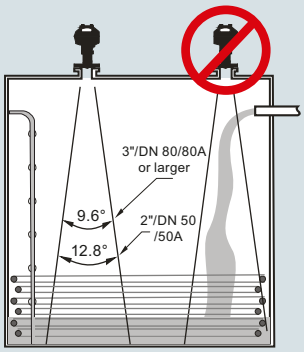

Mounting on bypass

Orient front or back of device toward vent.

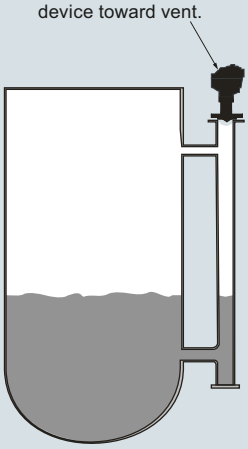

Mounting on stilling well

Orient front or back of device toward stillpipe slots.

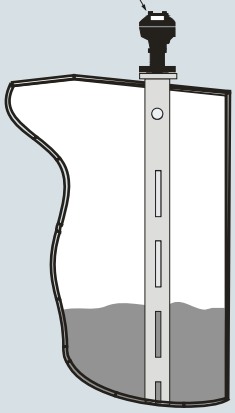

Mounting on vessel

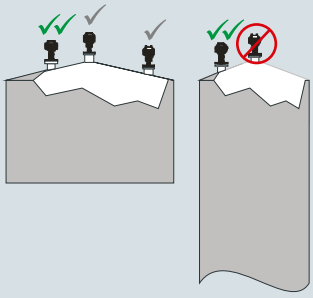

Mounting on a nozzle

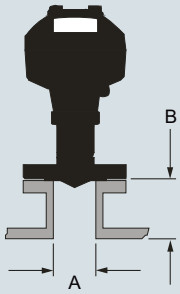

A	B*
ø 50 (2)	500 (20) max.
ø 80 (3)	500 (20) max.
ø 100 (4)	500 (20) max.
ø 150 (6)	500 (20) max.

*Reference conditions

SITRANS LR250 Flanged Encapsulated Antenna installation, dimensions in mm (inch)

© Siemens 2020

Technical specifications

Mode of operation	
Measuring principle	Radar level measurement
Frequency	K-band (25.0 GHz)
Minimum measuring range	50 mm (2 inch) from end of antenna
Maximum measuring range	20 m (66 ft)
Output	
HART	Version 5.1
• Analog output	4 ... 20 mA
• Accuracy	± 0.02 mA
• Fail-safe	• Programmable as high low or hold (loss of echo) • NE 43 programmable
PROFIBUS PA	Profile 3.01
• Function blocks	2 Analog Input (AI)
FOUNDATION Fieldbus	H1
• Functionality	Basic or LAS
• Version	ITK 5.2.0
• Function blocks	2 Analog Input (AI)
Performance (according to reference conditions IEC60770-1)	
Maximum measured error	• > 500 mm from sensor reference point: 3 mm (0.118 inch) • < 500 mm from sensor reference point: 25 mm (1 inch)
Influence of ambient temperature	< 0.003 %/K
Rated operating conditions	
Installation conditions	
• Location	Indoor/outdoor
Ambient conditions (enclosure)	
• Ambient temperature	-40 ... +80 °C (-40 ... +176 °F)
• Storage temperature	-40 ... +80 °C (-40 ... +176 °F)
• Installation category	I
• Pollution degree	4
Medium conditions	
Dielectric constant ε_r	≥ 1.6 (antenna dependent)
Process temperature	-40 ... +170 °C (-40 ... +338 °F) at process connection
Process pressure	See Pressure/Temperature curves for more information (page 4/233)
Design	
Enclosure	
• Material	Aluminum, polyester powder-coated
• Cable inlet	2 x M20 x 1.5 or 2 x ½" NPT
Degree of protection	Type 4X/NEMA 4X, Type 6/NEMA 6, IP67, IP68
Weight (dependent on process connection)	• Approx. 7 kg (15.43 lb) for 2" Class 150 ASME B16.5 raised face flange (smallest size) • Approx. 17.7 kg (39.02 lb) for 6" Class 150 ASME B16.5 raised face flange (largest size)
Display (local)	Graphic local user interface including quick start wizard and echo profile display
Antenna	
• Material	Stainless Steel 316L (1.4435 or 1.4404) and TFM 1600 PTFE Lens (lens is the only wetted part)
• Dimensions (nominal sizes)	48 mm (2 inch), 80 mm (3 inch), 100 mm (4 inch), 150 mm (6 inch)
Process connections	
Flanged connection	Raised Face • 2, 3, 4, 6" Class 150 ASME B16.5 • 50A, 80A, 100A, 150A 10K JIS B 2220 • DN 50, DN 80, DN 100 & DN 150 PN 10/16 EN 1092-1 type B1

Power supply	
4 ... 20 mA/HART	Nominal 24 V DC (max. 30 V DC) with max. 550 Ω
PROFIBUS PA	• 15 mA • Per IEC 61158-2
FOUNDATION Fieldbus	• 20.0 mA • Per IEC 61158-2
Certificates and approvals	
General	$CSA_{US/C}$, CE, FM, RCM
Radio	FCC, Industry Canada, RED, RCM
Hazardous	
• Explosion Proof (Brazil)	INMETRO Ex d ia mb IIC T4 Ga/Gb, Ex ia ta IIIC T100 °C Da
• Increased Safety (Brazil)	INMETRO Ex e ia mb IIC T4 Ga/Gb, Ex ia ta IIIC T100 °C Da
• Intrinsically Safe (Brazil)	INMETRO Ex ia IIC T4 Ga, Ex ia ta IIIC T100 °C Da
• Explosion Proof (Canada/USA)	CSA/FM Class I, Div. 1, Groups A, B, C, D; Class II, Div. 1, Groups E, F, G; Class III T4
• Intrinsically Safe (Canada/USA)	CSA/FM Class I, Div. 1, Groups A, B, C, D; Class II, Div. 1, Groups E, F, G; Class III T4
• Non-incendive (Canada/USA)	CSA/FM Class I, Div. 2, Groups A, B, C, D T5
• Flame Proof/Increased Safety (China)	NEPSI Ex d ia mb IIC T4 Ga/Gb, Ex e ia mb IIC T4 Ga/Gb, Ex iaD tD A20 IP67 T100 °C
• Intrinsically Safe (China)	NEPSI Ex ia IIC T4 Ga, Ex iaD tD A20 IP67 T100 °C
• Non-sparking/Energy Limited (China)	NEPSI Ex nA IIC T4 Gc
• Intrinsically Safe (Europe)	ATEX II 1G Ex ia IIC T4 Ga ATEX II 1D Ex ia ta IIIC T100 °C Da
• Non-sparking/Energy Limited (Europe)	ATEX II 3G Ex nA IIC T4 Gc
• Flame Proof (International/Europe)	IECEx/ATEX II 1/2 GD, 1D, 2D Ex d mb ia IIC T4 Ga/Gb, Ex ia ta IIC T100 °C Da
• Increased Safety (International/Europe)	IECEx/ATEX II 1/2 GD, 1D, 2D, Ex e mb ia IIC T4 Ga/Gb, Ex ia ta IIIC T100 °C Da
• Intrinsically Safe (International)	IECEx/ATEX II 1 G Ex ia IIC T4 Ga, IECEx/ATEX II 1D Ex ia ta IIIC T100 °C Da
• Explosion Proof (Russia/Kazakhstan)	EAC Ex d
• Increased Safety (Russia/Kazakhstan)	EAC Ex e
• Intrinsically Safe (Russia/Kazakhstan)	EAC Ex ia
• Marine	• Lloyd's Register of Shipping • ABS Type Approval • Bureau Veritas
• Functional Safety	SIL-2 suitable in accordance with IEC 61508/61511
Programming	
Intrinsically Safe Siemens handheld programmer	Infrared receiver
• Approvals for handheld-programmer	IS model: ATEX II 1 GD Ex ia IIC T4 Ga Ex ia D 20 T135 °C T_a = -20 ... +50 °C CSA/FM Class I, II, III, Div. 1, Groups A, B, C, D, E, F, G, T6 T_a = 50 °C IECEx SIR 09.0073
Handheld communicator	HART communicator 375/475
PC	• SIMATIC PDM • Emerson AMS • SITRANS DTM (for connection into FDT such as PACTware or Fieldcare)
Display (local)	Graphic local user interface including quick start wizard and echo profile displays

© Siemens 2020

Selection and ordering data

	Article No.
SITRANS LR250 Radar level transmitter with encapsulated horn and PTFE lens ↗	**7ML5432-** ■■■■0-■■■■
Continuous, non-contact, 20 m (66 ft) range, for liquids and slurries in the chemical industry.	
↗ Click on the Article No. for the online configuration in the PIA Life Cycle Portal.	
Process Connection Material	
Stainless steel 1.4404/1.4435	0
Process Connection Type	
Flanged Process Connection Types (stainless steel 1.4404/1.4435)	
2" Class 150 ASME B16.5 raised face[1]	BF
3" Class 150 ASME B16.5 raised face	BG
4" Class 150 ASME B16.5 raised face	BH
6" Class 150 ASME B16.5 raised face	BJ
50A 10K JIS B 2220 raised face[1]	FD
80A 10K JIS B 2220 raised face	FE
100A 10K JIS B 2220 raised face	FF
150A 10K JIS B 2220 raised face	FG
DN 50 PN 10/16 EN 1092-1 type B1 raised face[1]	GA
DN 80 PN 10/16 EN 1092-1 type B1 raised face	GB
DN 100 PN 10/16 EN 1092-1 type B1 raised face	GC
DN 150 PN 10/16 EN 1092-1 type B1 raised face	GD
Communication/Output	
PROFIBUS PA	1
4 ... 20 mA, HART, start-up at < 3.6 mA	2
FOUNDATION Fieldbus	3
Enclosure/Cable inlet	
Aluminum, Epoxy painted	
2 x ½" NPT	0
2 x M20 x 1.5	1
Antenna lens material	
TFM 1600 PTFE Flush Lens	A
Approvals	
General Purpose, CE, CSA, FM, FCC, RED, RCM	A
Intrinsically Safe: CSA/FM Class I, Div. 1, Groups A, B, C, D, Class II, Div. 1, Groups E, F, G, Class III T4 FCC, Industry Canada	B
Intrinsically Safe: IECEx/ATEX II 1 G Ex ia IIC T4 Ga, IECEx/ATEX II 1D Ex ia ta IIIC T100 °C Da, INMETRO Ex ia IIC T4 Ga, Ex ia ta IIIC T100 °C Da, CE, RED, RCM	C
Non-incendive: CSA/FM Class I, Div. 2, Groups A, B, C, D T5, FCC, Industry Canada	D
Non Sparking: ATEX II 3G Ex nA IIC T4 Gc, CE, RED, RCM	E
Increased Safety: IECEx/ATEX II 1/2 GD,1D, 2D Ex e mb ia IIC T4 Ga/Gb, Ex ia ta IIIC T100 °C Da, INMETRO Ex e ia mb IIC T4 Ga/Gb, Ex ia ta IIIC T100 °C Da, CE, RED, RCM[2]	F
Flameproof: IECEx/ATEX II 1/2 GD 1D, 2D Ex d mb ia IIC T4 Ga/Gb, Ex ia ta IIIC T100 °C Da, INMETRO Ex d ia mb IIC T4 Ga/Gb, Ex ia ta IIIC T100 °C Da, CE, RED, RCM[2]	G
Explosion proof: CSA/FM Class I, II and III, Div. 1, Groups A, B, C, D, E, F, G, FCC, Industry Canada[2]	H
Non Sparking: NEPSI Ex nA IIC T4 Gc	K
Intrinsically Safe: NEPSI Ex ia IIC T4 Ga, Ex iaD tD A20 IP67 T100 °C	L
Flameproof: NEPSI Ex d ia mb IIC T4 Ga/Gb, Ex iaD tD A20 IP67 T100 °C[2]	M
Increased Safety: NEPSI Ex e ia mb IIC T4 Ga/Gb, Ex iaD tD A20 IP67 T100 °C[2]	N
Pressure rating	
Rating per Pressure/Temperature curves in instruction manual	0

[1] Maximum range 10 m (32.8 ft), dk > 3 [20 m (66 ft)] and dk > 1.6 when mounted in stillpipe].

[2] Applicable with communication option 2 only.

	Order code
Further designs	
Please add "**-Z**" to Article No. and specify Order code(s).	
Plug M12 with mating Connector[1)2)3)]	**A50**
Plug 7/8" with mating Connector[2)3)4)]	**A55**
Stainless steel tag [69 x 50 mm (2.71 x 1.97 inch)]: Measuring-point number/identification (max. 27 characters); specify in plain text	**Y15**
Manufacturer's test certificate: M to DIN 55350, Part 18 and to ISO 9000	**C11**
Material inspection Certificate Type 3.1 per EN 10204	**C12**
Functional Safety (SIL 2). Device suitable for use in accordance with IEC 61508 and IEC 61511[5)6)]	**C20**
Namur NE43 compliant, device preset to failsafe < 3.6 mA[5)]	**N07**
Operating Instructions	
All literature is available to download for free, in a range of languages, at	
http://www.siemens.com/processinstrumentation/documentation	
Accessories	Article No.
Handheld programmer, Intrinsically safe, EEx ia	**7ML1930-1BK**
HART modem/USB (for use with a PC and SIMATIC PDM)	**7MF4997-1DB**
One metallic cable gland M20 x 1.5, rated -40 ... +80 °C (-40 ... +176 °F), HART (2 are required)[6)]	**7ML1930-1AP**
One metallic cable gland M20 x 1.5, rated -40 ... +80 °C (-40 ... +176 °F), PROFIBUS PA and FOUNDATION Fieldbus (2 are required)[2)]	**7ML1930-1AQ**
SITRANS RD100, loop powered display - see Chapter 7	**7ML5741-.....-.**
SITRANS RD150, remote digital display for 4 ... 20 mA and HART devices - see Chapter 7	**7ML5742-.....-....**
SITRANS RD200, universal input display with Modbus conversion - see Chapter 7	**7ML5740-.....-..**
SITRANS RD300, dual line display with totalizer and linearization curve and Modbus conversion - see Chapter 7	**7ML5744-.....-..**
For applicable back up point level switch - see point level measurement section	

[1)] Available with enclosure option 1 only.

[2)] Available with communication options 1 and 3 only.

[3)] Available with approval options A, B, C, and L only.

[4)] Available with enclosure option 0 only.

[5)] Applicable with communication option 2 only.

[6)] Available with approval options A, B, C, D, E, K, and L only.

© Siemens 2020

Selection and ordering data

SITRANS LR250 flanged encapsulated Specials

	Article No.
SITRANS LR250 flanged encapsulated antenna version enclosures (PROFIBUS PA models)	
SITRANS LR250 flanged encapsulated antenna version (7ML5432) enclosure with board stack, M20 cable inlet, approval option A, with PROFIBUS PA communication, no process connection	**A5E32462853**
SITRANS LR250 flanged encapsulated antenna version (7ML5432) enclosure with board stack, NPT cable inlet, approval option A, with PROFIBUS PA communication, no process connection	**A5E32462854**
SITRANS LR250 flanged encapsulated antenna version (7ML5432) enclosure with board stack, NPT cable inlet, approval option B, with PROFIBUS PA communication, no process connection	**A5E32462855**
SITRANS LR250 flanged encapsulated antenna version (7ML5432) enclosure with board stack, M20 cable inlet, approval option C, with PROFIBUS PA communication, no process connection	**A5E32462856**
SITRANS LR250 flanged encapsulated antenna version (7ML5432) enclosure with board stack, NPT cable inlet, approval option D, with PROFIBUS PA communication, no process connection	**A5E32462857**
SITRANS LR250 flanged encapsulated antenna version (7ML5432) enclosure with board stack, M20 cable inlet, approval option E, with PROFIBUS PA communication, no process connection	**A5E32462858**
SITRANS LR250 flanged encapsulated antenna version enclosures (FOUNDATION Fieldbus models)	
SITRANS LR250 flanged encapsulated antenna version (7ML5432) enclosure with board stack, M20 cable inlet, approval option A, with FOUNDATION Fieldbus communication, no process connection	**A5E32462859**
SITRANS LR250 flanged encapsulated antenna version (7ML5432) enclosure with board stack, NPT cable inlet, approval option A, with FOUNDATION Fieldbus communication, no process connection	**A5E32462860**
SITRANS LR250 flanged encapsulated antenna version (7ML5432) enclosure with board stack, NPT cable inlet, approval option B, with FOUNDATION Fieldbus communication, no process connection	**A5E32462861**
SITRANS LR250 flanged encapsulated antenna version (7ML5432) enclosure with board stack, M20 cable inlet, approval option C, with FOUNDATION Fieldbus communication, no process connection	**A5E32462862**
SITRANSLR250 flanged encapsulated antenna version (7ML5432) enclosure with board stack, NPT cable inlet, approval option D, with FOUNDATION Fieldbus communication, no process connection	**A5E32462863**
SITRANS LR250 flanged encapsulated antenna version (7ML5432) enclosure with board stack, M20 cable inlet, approval option E, with FOUNDATION Fieldbus communication, no process connection	**A5E32462864**

	Article No.
SITRANS LR250 flanged encapsulated antenna version enclosures (< 3.6 mA start-up HART models)	
SITRANS LR250 flanged encapsulated antenna version (7ML5432) enclosure with board stack, M20 cable inlet, approval option A, with HART communication start-up at < 3.6 mA, no process connection	**A5E32462865**
SITRANS LR250 flanged encapsulated antenna version (7ML5432) enclosure with board stack, NPT cable inlet, approval option A, with HART communication start-up at < 3.6 mA, no process connection	**A5E32462866**
SITRANS LR250 flanged encapsulated antenna version (7ML5432) enclosure with board stack, NPT cable inlet, approval option B, with HART communication start-up at < 3.6 mA, no process connection	**A5E32462867**
SITRANS LR250 flanged encapsulated antenna version (7ML5432) enclosure with board stack, M20 cable inlet, approval option C, with HART communication start-up at < 3.6 mA, no process connection	**A5E32462868**
SITRANS LR250 flanged encapsulated antenna version (7ML5432) enclosure with board stack, NPT cable inlet, approval option D, with HART communication start-up at < 3.6 mA, no process connection	**A5E32462869**
SITRANS LR250 flanged encapsulated antenna version (7ML5432) enclosure with board stack, M20 cable inlet, approval option E, with HART communication start-up at < 3.6 mA, no process connection	**A5E32462830**
SITRANS LR250 flanged encapsulated antenna version (7ML5432) enclosure with board stack, M20 cable inlet, approval option F, with HART communication start-up at < 3.6 mA, no process connection	**A5E32462831**
SITRANS LR250 flanged encapsulated antenna version (7ML5432) enclosure with board stack, M20 cable inlet, approval option G, with HART communication start-up at < 3.6 mA, no process connection	**A5E32462832**
SITRANS LR250 flanged encapsulated antenna version (7ML5432) enclosure with board stack, NPT cable inlet, approval option H, with HART communication start-up at < 3.6 mA, no process connection	**A5E32462833**

© Siemens 2020

Selection and ordering data	Article No.
SITRANS LR250 flanged encapsulated antenna lens kits	
Replacement TFM 1600 Lens and Spring Washer Kit for 2 inch Class 150 ASME B16.5 raised faced	**A5E32462817**
Replacement TFM 1600 Lens and Spring Washer Kit for 3 inch Class 150 ASME B16.5 raised faced	**A5E32462819**
Replacement TFM 1600 Lens and Spring Washer Kit for 4 inch Class 150 ASME B16.5 raised faced	**A5E32462820**
Replacement TFM 1600 Lens and Spring Washer Kit for 6 inch Class 150 ASME B16.5 raised faced	**A5E32462821**
Replacement TFM 1600 Lens and Spring Washer Kit for 50A 10K JIS B 2220 raised Face	**A5E32462822**
Replacement TFM 1600 Lens and Spring Washer Kit for 80A 10K JIS B 2220 raised Face	**A5E32462823**
Replacement TFM 1600 Lens and Spring Washer Kit for 100A 10K JIS B 2220 raised Face	**A5E32462824**
Replacement TFM 1600 Lens and Spring Washer Kit for 150A 10K JIS B 2220 raised Face	**A5E32462825**
Replacement TFM 1600 Lens and Spring Washer Kit for DN50 PN10/16 EN 1092-1 type B1 raised face	**A5E32462826**
Replacement TFM 1600 Lens and Spring Washer Kit for DN80 PN10/16 EN 1092-1 type B1 raised face	**A5E32462827**
Replacement TFM 1600 Lens and Spring Washer Kit for DN100 PN10/16 EN 1092-1 type B1 raised face	**A5E32462828**
Replacement TFM 1600 Lens and Spring Washer Kit for DN150 PN10/16 EN 1092-1 type B1 raised face	**A5E32462829**
Ex-proof plugs	
Ex-proof plugs kit, 1/2" NPT, qty 5	**A5E39979991**
Ex-proof plugs kit, M20, qty 5	**A5E39979992**

© Siemens 2020

Characteristic curves

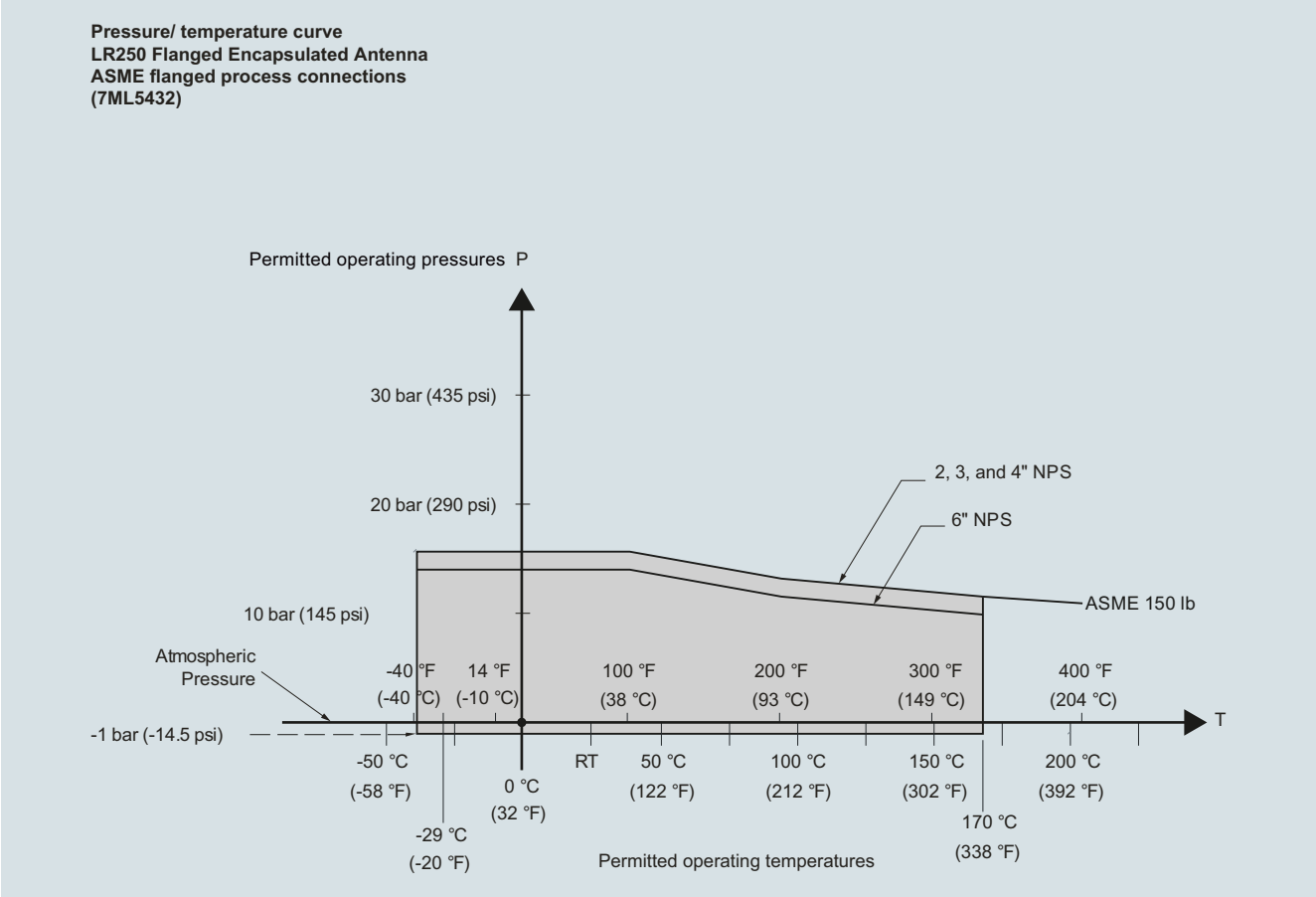

SITRANS LR250 Flanged Encapsulated Antenna pressure/temperature curve

© Siemens 2020

Characteristic curves (continued)

Pressure/ temperature curve
LR250 Flanged Encapsulated Antenna
EN 1092-1 flanged process connections
(7ML5432)

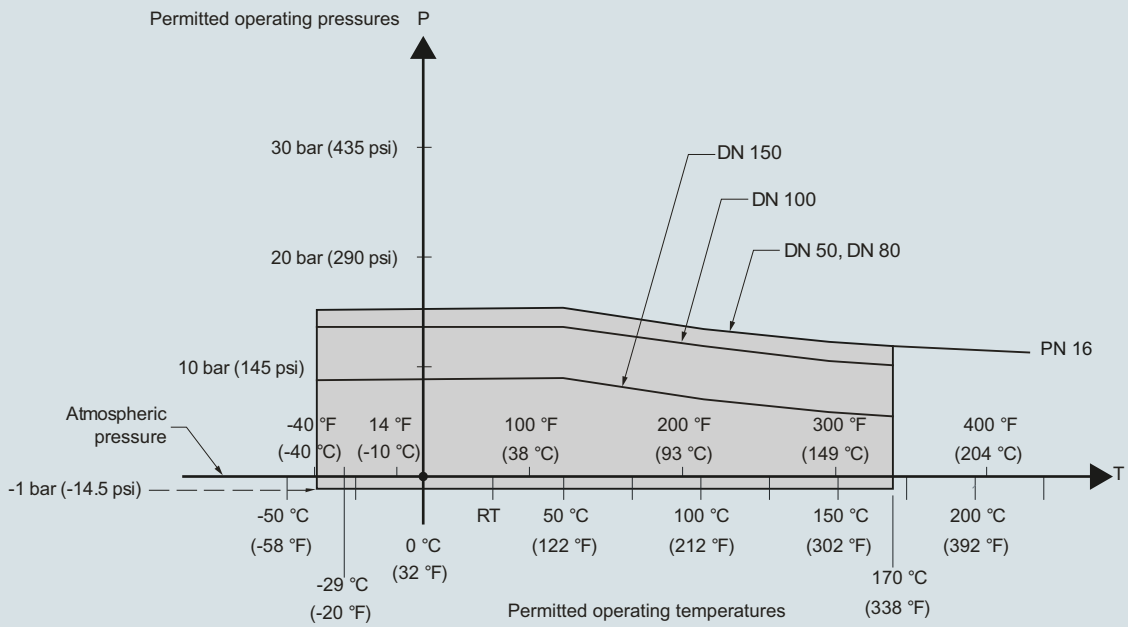

SITRANS LR250 Flanged Encapsulated Antenna pressure/temperature curve

Pressure/ temperature curve
LR250 Flanged Encapsulated Antenna
JIS B 2220 flanged process connections
(7ML5432)

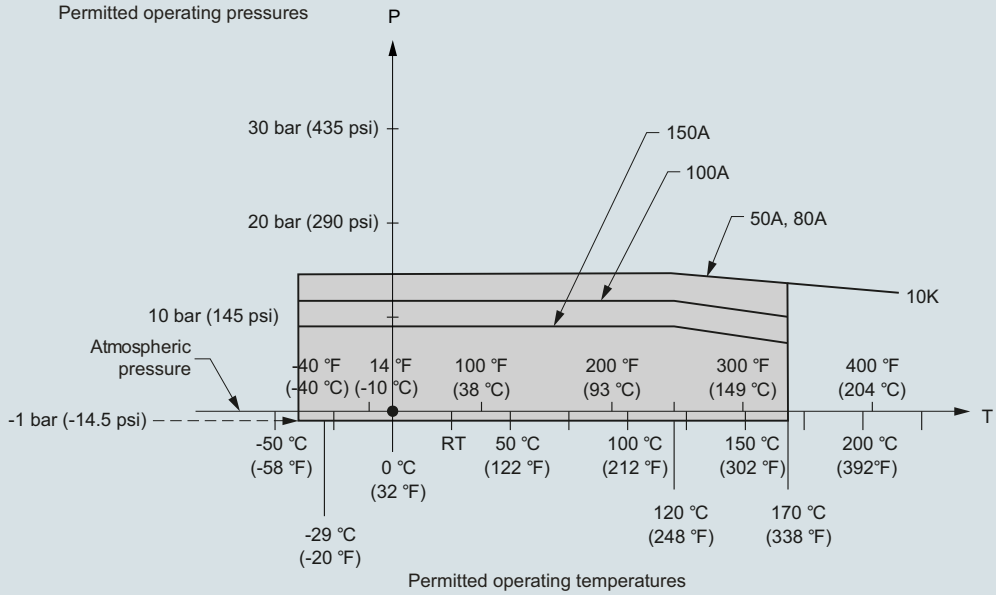

SITRANS LR250 Flanged Encapsulated Antenna pressure/temperature curve

© Siemens 2020

Dimensional drawings

Flanged Encapsulated Antenna 2"/DN 50/50A

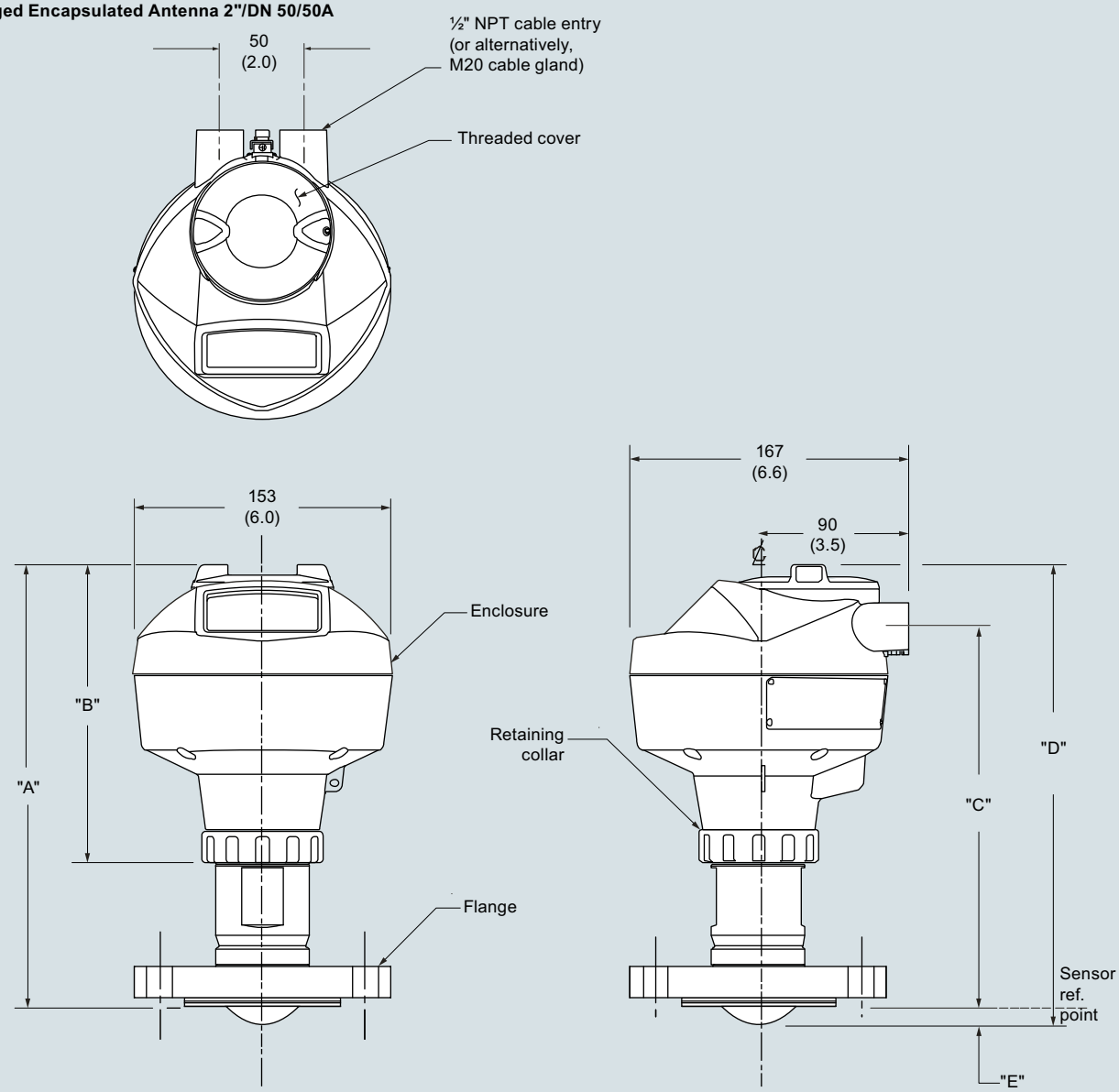

Flange Size	Flange Class	Flange O.D.	Antenna aperture size	Height to Sensor reference point dimension E[1]	Beam angle	Measurement Range	Dimension A	Dimension B	Dimension C	Dimension D
2"	150 lb	152 (5.98)	50 (1.97)	11 (0.43)	12.8°	10 m (32.8 ft)	263 (10.35)	178 (7)	223 (8.78)	274 (10.79)
DN 50	PN 10/16	165 (6.50)								
50A	10K	155 (6.10)								

[1] Height from tip of lens to sensor reference point as shown.

SITRANS LR250 Flanged Encapsulated Antenna, dimensions in mm (inch)

© Siemens 2020

Dimensional drawings (continued)

Flanged Encapsulated Antenna 3"/DN 50/80A or greater

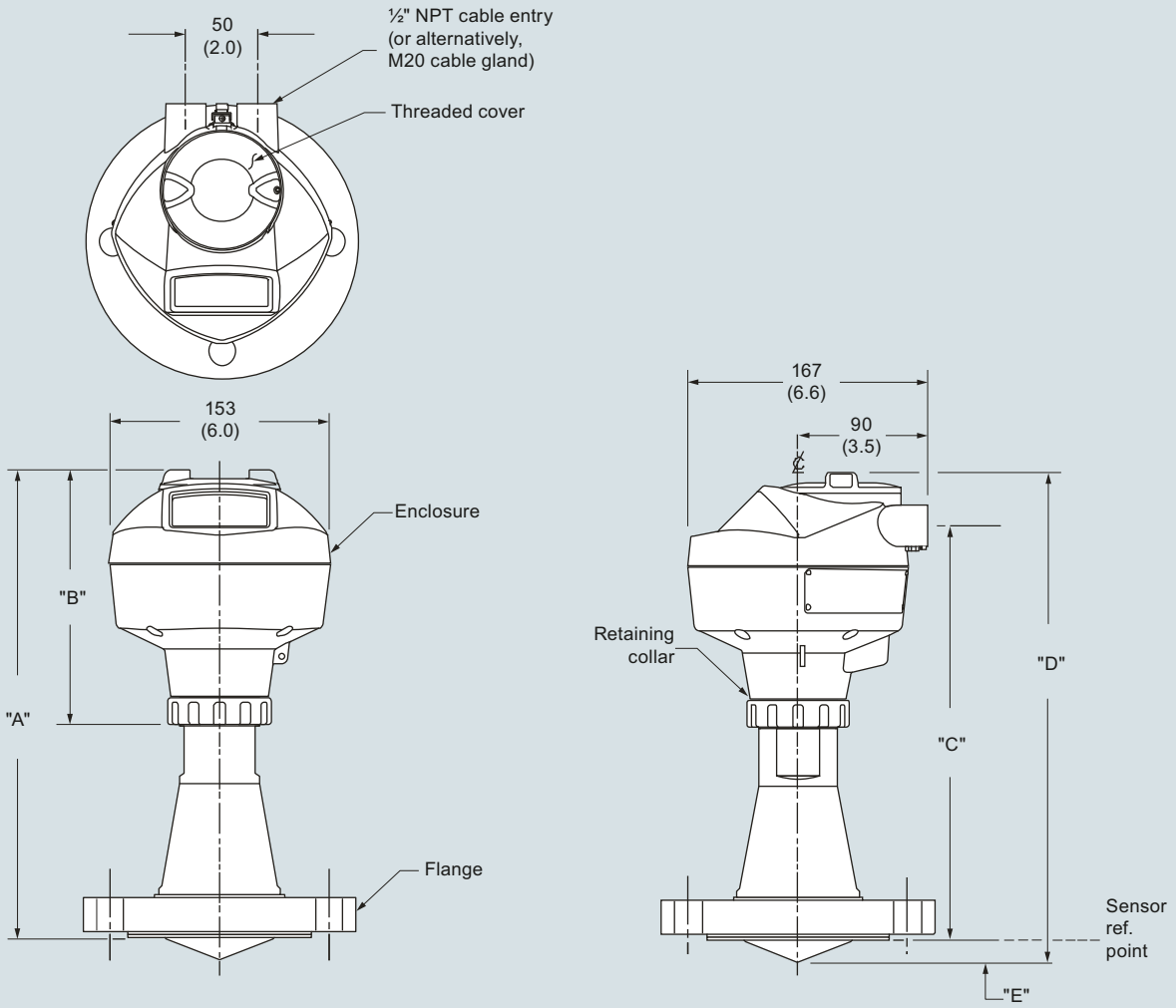

Flange Size	Flange Class	Flange O.D.	Antenna aperture size	Height to Sensor reference point dimension E[1]	Beam angle	Measurement Range	Dimension A	Dimension B	Dimension C	Dimension D
3"	150 lb	190 (7.48)	75 (2.95)	15 (0.59)	9.6°	20 m (65.6 ft)	328 (12.91)	178 (7)	288 (11.34)	343 (13.54)
DN 80	PN 10/16	200 (7.87)								
80A	10K	185 (7.28)								
4"	150 lb	230 (9.06)	75 (2.95)	13 (0.51)	9.6°	20 m (65.6 ft)	328 (12.91)	178 (7)	288 (11.34)	343 (13.50)
DN 100	PN 10/16	220 (8.66)								
100A	10K	210 (8.27)								
6"	150 lb	280 (11.02)	75 (2.95)	15 (0.59)	9.6°	20 m (65.6 ft)	333 (13.11)	178 (7)	293 (11.54)	348 (13.70)
DN 150	PN 10/16	285 (11.25)								
150A	10K	280 (11.02)								

[1] Height from tip of lens to sensor reference point as shown.

SITRANS LR250 Flanged Encapsulated Antenna, dimensions in mm (inch)

© Siemens 2020

Circuit diagrams

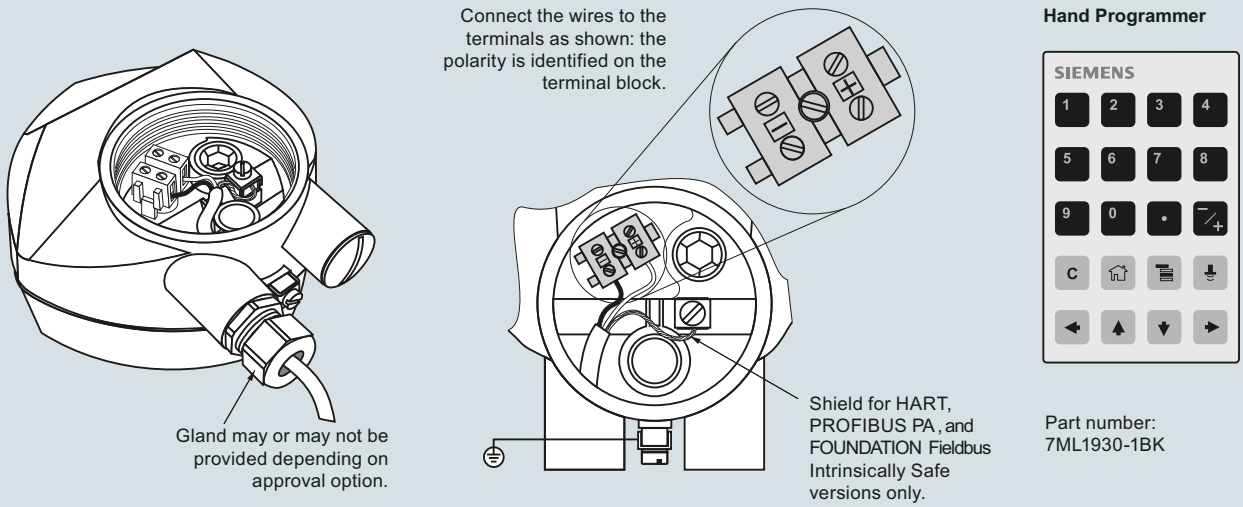

Notes:

1. DC terminal shall be supplied from a source providing electrical isolation between the input and output, to meet the applicable safety requirements of IEC 61010-1.
2. All field wiring must have insulation suitable for rated input voltages.
3. Use shielded twisted pair cable (14 ... 22 AWG) for HART version.
4. Separate cables and conduit may be required to conform to standard instrumentation wiring practices or electrical codes.

SITRANS LR250 connections

© Siemens 2020

Overview

The SITRANS LR250 Hygienic Encapsulated Antenna is a 2-wire 25 GHz pulse radar level transmitter with sanitary and hygienic approvals for continuous monitoring of liquids, slurries, and pastes within the food, beverage, chemical, and pharmaceutical industries to a range of 20 m (66 ft) (antenna dependent).

Picture shown with accessories sold separately.

Benefits

- Fully encapsulated horn antenna design with FDA approved and USP Class VI compliant, TFM 1600 PTFE lens
- < 0.8 µ Ra surface finish for maximum cleanability and hygiene requirements commonly required in sanitary environments
- Chemically resistant TFM 1600 PTFE lens is also suitable for aggressive or corrosive materials
- Approved device in accordance with 3-A, EHEDG EL Class I and/or EHEDG EL Aseptic Class I
- Cost effective replacement for transmitters made of exotic materials
- Graphical local user interface (LUI) makes operation simple with plug-and-play set-up using the intuitive Quick Start Wizard
- Industry standard process connections including ISO 2852, DIN 11851, DIN 11864-1, DIN 11864-2, DIN 11864-3, and Tuchenhagen Varivent Type F and N
- LUI displays echo profiles for diagnostic support
- 25 GHz high frequency and 2 inch (50 mm) process connection/antenna allow for easy mounting
- Insensitive to mounting location and obstructions, and less sensitive to nozzle interference
- Communication using HART, PROFIBUS PA, or FOUNDATION Fieldbus
- Process Intelligence signal processing for improved measurement reliability and Auto False-Echo Suppression of fixed obstructions
- Programming using infrared Intrinsically Safe handheld programmer or over a network using SIMATIC PDM, Emerson AMS, or Field Device Tools, such as PACTware or Fieldcare via SITRANS DTM.
- Functional Safety (SIL 2). Device suitable for use in accordance with IEC 61508 and IEC 61511

Application

SITRANS LR250 includes a graphical local user interface (LUI) that improves set-up and operation by including an intuitive Quick Start Wizard, and echo profile displays for diagnostic support. Startup is easy using the Quick Start wizard with few parameters required for basic operation.

The 25 GHz frequency creates a narrow, focused beam allowing for smaller antenna options and decreasing sensitivity to obstructions.

SITRANS LR250's unique design allows safe and simple programming using the Intrinsically Safe handheld programmer without having to open the instrument's lid.

SITRANS LR250 measures superbly in small vessels and in tanks/vessels up to 20 m (66 ft) on materials with dk > 1.6.

- Key Applications: applications within the food, beverage, chemical and pharmaceutical industries where sanitary, aseptic, or hygienic approvals are required or easy in-stall/clean flush antennas are preferable, such as ice cream, fruit juice, milk, beer, and pharmaceutical or chemical additives and ingredients.

Configuration

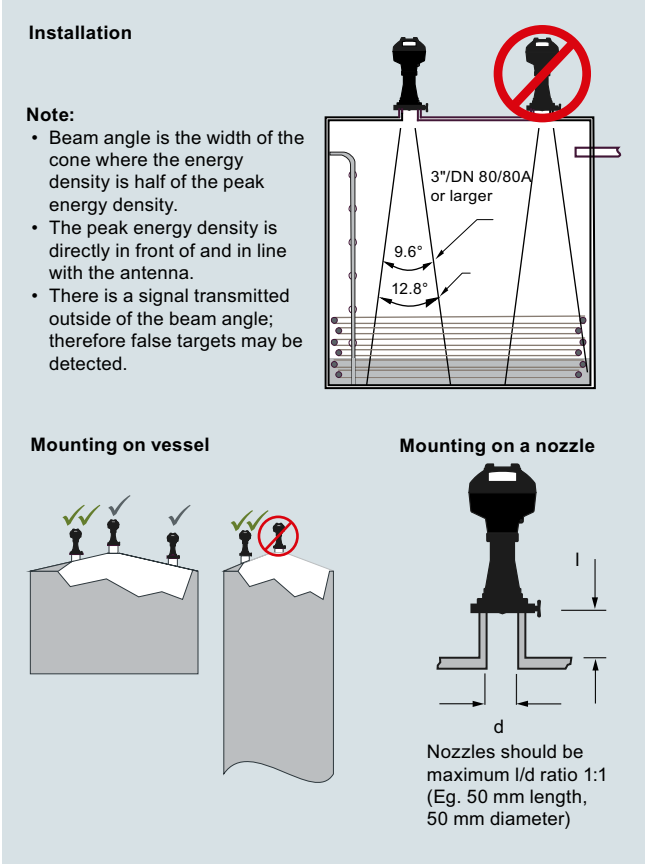

LR250 Hygienic Encapsulated Antenna, dimensions in mm (inch)

© Siemens 2020

Technical specifications

Mode of Operation	
Measuring principle	Radar level measurement
Frequency	K-band (25.0 GHz)
Minimum measuring range	50 mm (2 inch) from end of antenna
Maximum measuring range	20 m (66 ft)
Output	
HART	Version 5.1
• Analog output	4 ... 20 mA
• Accuracy	± 0.02 mA
• Fail-safe	• Programmable as high low or hold (loss of echo) • NE 43 programmable
PROFIBUS PA	Profile 3.01
• Function blocks	2 Analog Input (AI)
FOUNDATION Fieldbus	H1
• Functionality	Basic or LAS
• Version	ITK 5.2.0
• Function blocks	2 Analog Input (AI)
Performance (according to reference conditions IEC60770-1)	
Maximum measured error	• > 500 mm from sensor reference point: 3 mm (0.118 inch) • < 500 mm from sensor reference point: 25 mm (1 inch)
Influence of ambient temperature	< 0.003 %/K
Rated operating conditions	
Installation conditions	
• Location	Indoor/outdoor
Ambient conditions (enclosure)	
• Ambient temperature	-40 ... +80 °C (-40 ... +176 °F)
• Storage temperature	-40 ... +80 °C (-40 ... +176 °F)
• Installation category	I
• Pollution degree	4
Medium conditions	
Dielectric constant ε_r	≥ 1.6 (antenna dependent)
Process temperature	-40 ... +170 °C (-40 ... +338 °F) at process connection
Process pressure	See Pressure/Temperature curves for more information
Design	
Enclosure	
• Material	Aluminum, polyester powder coated
• Cable inlet	2 x M20 x 1.5 or 2 x ½" NPT
Degree of protection	Type 4X/NEMA 4X, Type 6/NEMA 6, IP67, IP68
Weight (dependent on process connection)	• Approx. 4.7 kg (10.4 lb) for 2" ISO 2852 (smallest size) • Approx. 7.9 kg (17.4 lb) for DN 100 DIN 11864-2 (largest size)
Display (local)	Graphic local user interface including quick start wizard and echo profile display
Antenna	
• Material	Stainless steel 316L (1.4435 or 1.4404) and TFM 1600 PTFE Lens (lens is the only wetted part)
• Lens surface finish (R_a)	0.8 µm

Process connections	
Hygienic/Sanitary connections	• 2", 3" & 4" Sanitary Clamp according to ISO 2852 • DN 50, DN 80 & DN 100 Aseptic/Hygienic threaded to DIN 11864-1 [Form A] • DN 50, DN 80 & DN 100 Aseptic/Hygienic flanged to DIN 11864-2 [Form A] • DN 50, DN 80 & DN 100 Aseptic/Hygienic Clamp according to DIN 11864-3 [Form A] • DN 50, DN 80 & DN 100 Hygienic Union according to DIN 11851 • Type F (50 mm) & Type N (68 mm) Tuchenhagen Varivent
Power supply	
4 ... 20 mA/HART	Nominal 24 V DC (max. 30 V DC) with max. 550 Ω
PROFIBUS PA	• 15 mA • Per IEC 61158-2
FOUNDATION Fieldbus	• 20.0 mA • Per IEC 61158-2
Certificates and approvals	
General	$CSA_{US/C}$, CE, FM, RCM
Radio	FCC, Industry Canada, RED, RCM
Hazardous	
• Explosion Proof (Brazil)	INMETRO Ex d ia mb IIC T4 Ga/Gb, Ex ia ta IIIC T100 °C Da
• Increased Safety (Brazil)	INMETRO Ex e ia mb IIC T4 Ga/Gb, Ex ia ta IIIC T100 °C Da
• Intrinsically Safe (Brazil)	INMETRO Ex ia IIC T4 Ga, Ex ia ta IIIC T100 °C Da
• Explosion Proof (Canada/USA)	CSA/FM Class I, Div. 1, Groups A, B, C, D; Class II, Div. 1, Groups E, F, G; Class III T4
• Intrinsically Safe (Canada/USA)	CSA/FM Class I, Div. 1, Groups A, B, C, D; Class II, Div. 1, Groups E, F, G; Class III T4
• Non-incendive (Canada/USA)	CSA/FM Class I, Div. 2, Groups A, B, C, D T5
• Flame Proof/Increased Safety (China)	NEPSI Ex d ia mb IIC T4 Ga/Gb, Ex e ia mb IIC T4 Ga/Gb, Ex iaD tD A20 IP67 T100 °C
• Intrinsically Safe (China)	NEPSI Ex ia IIC T4 Ga, Ex iaD tD A20 IP67 T100 °C
• Non-sparking (China)	NEPSI Ex nA IIC T4 Gc
• Intrinsically Safe (Europe)	ATEX II 1G Ex ia IIC T4 Ga ATEX II 1D Ex ia ta IIIC T100 °C Da
• Non-sparking (Europe)	ATEX II 3G Ex nA IIC T4 Gc
• Flame Proof (International/Europe)	IECEx/ATEX II 1/2 GD, 1D, 2D Ex d mb ia IIC T4 Ga/Gb, Ex ia ta IIC T100 °C Da
• Increased Safety (International/Europe)	IECEx/ATEX II 1/2 GD, 1D, 2D, Ex e mb ia IIC T4 Ga/Gb, Ex ia ta IIIC T100 °C Da
• Intrinsically Safe (International)	IECEx/ATEX II 1 G Ex ia IIC T4 Ga, IECEX/ATEX II 1D Ex ia ta IIIC T100 °C Da
• Explosion Proof (Russia/Kazakhstan)	EAC Ex d
• Increased Safety (Russia/Kazakhstan)	EAC Ex e
• Intrinsically Safe (Russia/Kazakhstan)	EAC Ex ia
Hygienic/Sanitary	EHEDG EL Class I EHEDG EL Aseptic Class I

© Siemens 2020

Technical specifications (continued)

Programming	
Intrinsically Safe Siemens handheld programmer	Infrared receiver
• Approvals for handheld programmer	IS model: ATEX II 1 GD Ex ia IIC T4 Ga Ex ia D 20 T135 °C Ta = -20 ... +50 °C CSA/FM Class I, II, III, Div. 1, Groups A, B, C, D, E, F, G, T6 T_a = 50 °C IECEx SIR 09.0073
Handheld communicator	HART communicator 375/475
PC	• SIMATIC PDM • Emerson AMS • SITRANS DTM (for connection into FDT, such as PACTware or Fieldcare)
Display (local)	Graphic local user interface including quick start wizard and echo profile displays

© Siemens 2020

SITRANS LR250 Hygienic Encapsulated Antenna

Selection and ordering data

	Article No.
SITRANS LR250 Radar level transmitter with encapsulated horn and PTFE lens ↗	**7ML5433-**
Continuous, non-contact, 20 m (66 ft) range, for liquids, solids, and slurries. For use in hygienic applications.	■ ■ ■ ■ 0 - ■ A ■ ■
↗ Click on the Article No. for the online configuration in the PIA Life Cycle Portal.	
Hygienic/Sanitary Approvals	
EHEDG EL Class I[1]	1
EHEDG EL Aseptic Class I[1]	2
3-A (Tuchenhagen connections only - FC ... FF)[2][3]	3
EHEDG EL Class I & 3-A (excludes Tuchenhagen connections)[2][4]	4
Process Connection Types (all types have TFM1600 PTFE lens)	
316L st/st [1.4435 or 1.4404]	
2" Sanitary Clamp according to ISO 2852[5]	A A
3" Sanitary Clamp according to ISO 2852	A B
4" Sanitary Clamp according to ISO 2852	A C
316L st/st (1.4435 or 1.4404) & 304L st/st (1.4301)	
DN 50 Aseptic/Hygienic nozzle/ slotted nut (instrument side) to DIN 11864-1 [Form A][5]	B A
DN 80 Aseptic/Hygienic nozzle/ slotted nut (instrument side) to DIN 11864-1 [Form A]	B B
DN 100 Aseptic/Hygienic nozzle/ slotted nut (instrument side) to DIN 11864-1 [Form A]	B C
316L st/st [1.4435 or 1.4404]	
DN 50 Aseptic/Hygienic flanged to DIN 11864-2 [Form A][5]	C A
DN 80 Aseptic/Hygienic flanged to DIN 11864-2 [Form A]	C B
DN 100 Aseptic/Hygienic flanged to DIN 11864-2 [Form A]	C C
316L st/st [1.4435 or 1.4404]	
DN 50 Aseptic/Hygienic Clamp according to DIN 11864-3 [Form A][5]	D A
DN 80 Aseptic/Hygienic Clamp according to DIN 11864-3 [Form A]	D B
DN 100 Aseptic/Hygienic Clamp according to DIN 11864-3 [Form A]	D C
316L st/st (1.4435 or 1.4404) & 304L st/st (1.4301)	
DN 50 Hygienic nozzle/ slotted nut (instrument side) to DIN 11851[5]	E A
DN 80 Hygienic nozzle/ slotted nut (instrument side) to DIN 11851	E B
DN 100 Hygienic nozzle/ slotted nut (instrument side) to DIN 11851	E C

	Article No.
SITRANS LR250 Radar level transmitter with encapsulated horn and PTFE lens	**7ML5433-**
Continuous, non-contact, 20 m (66 ft) range, for liquids, solids, and slurries. For use in hygienic applications.	■ ■ ■ ■ 0 - ■ A ■ ■
316L st/st [1.4435 or 1.4404]	
Type F (50 mm) Tuchenhagen Varivent (EHEDG only)[5]	F A
Type N (68 mm) Tuchenhagen Varivent (EHEDG only)[5]	F B
Type F (50 mm) Tuchenhagen Varivent [3-A only & EPDM process seal -40 ... 120 °C (-40 ... 248 °F)][5]	F C
Type N (68 mm) Tuchenhagen Varivent [3-A only & EPDM process seal -40 ... 120 °C (-40 ... 248 °F)][5]	F D
Type F (50 mm) Tuchenhagen Varivent [3-A only & FKM process seal -20 ... 170 °C (-4 ... 338 °F)][5]	F E
Type N (68 mm) Tuchenhagen Varivent [3-A only & FKM process seal -20 ... 170 °C (-4 ... 338 °F)][5]	F F
Communication	
PROFIBUS PA	1
4 ... 20 mA HART, start-up at < 3.6 mA	2
FOUNDATION Fieldbus	3
Enclosure (with Cable Inlets)	
Aluminum, Epoxy paint, 2 X ½" NPT	0
Aluminum, Epoxy paint, 2 X M20 x 1.5	1
Approvals	
General Purpose, CE, CSA, FM, FCC, RED, RCM	A
Intrinsically Safe: CSA/FM Class I, Div. 1, Groups A, B, C, D, Class II, Div. 1, Groups E, F, G, Class III T4 FCC, Industry Canada	B
Intrinsically Safe: IECEx/ATEX II 1 GD Ex ia IIC T4 Ga, Ex ia ta IIIC T100 °C Da, INMETRO Ex ia IIC T4 Ga, Ex ia ta IIIC T100 °C Da, CE, RED, RCM	C
Non-incendive: CSA/FM Class I, Div. 2, Groups A, B, C, D T5, FCC, Industry Canada	D
Non Sparking: ATEX II 3G Ex nA IIC T4 Gc, CE, RED, RCM	E
Increased Safety: IECEx/ATEX II 1/2 GD, 1D, 2D Ex e mb ia IIC T4 Ga/Gb, Ex ia ta IIIC T100 °C Da, INMETRO Ex e ia mb IIC T4 Ga/Gb, Ex ia ta IIIC T100 °C Da, CE, RED, RCM[6]	F
Flameproof: IECEx/ATEX II 1/2 GD 1D, 2D Ex d mb ia IIC T4 Ga/Gb, Ex ia ta IIIC T100 °C Da, INMETRO Ex d ia mb IIC T4 Ga/Gb, Ex ia ta IIIC T100 °C Da, CE, RED, RCM[6]	G
Explosion proof: CSA/FM Class I, II and III, Div. 1, Groups A, B, C, D, E, F, G, FCC, Industry Canada[6]	H
Non Sparking: NEPSI Ex nA IIC T4 Gc	K
Intrinsically Safe: NEPSI Ex ia IIC T4 Ga, Ex iaD tD A20 IP67 T100 °C	L
Flameproof: NEPSI Ex d ia mb IIC T4 Ga/Gb, Ex iaD tD A20 IP67 T100 °C[6]	M
Increased Safety: NEPSI Ex e ia mb IIC T4 Ga/Gb, Ex iaD tD A20 IP67 T100 °C[6]	N
Pressure Rating	
Rating per pressure/temperature curves in instruction manual	0

© Siemens 2020

Selection and ordering data

	Order code
Further designs	
Please add "**-Z**" to Article No. and specify Order code(s).	
Electrical Connection cable entry:	
Plug M12 (IP 67 rating) with mating connector[2)7)8)]	**A50**
Plug 7/8" (IP 67 rating) with mating Connector[2)8)9)]	**A55**
Test Certificates	
Manufacturer's Test Certificate M to DIN 55350, Part 18 and to ISO 9000	**C11**
Material inspection Certificate 3.1 of EN 10204	**C12**
Functional Safety	
Functional Safety (SIL 2). Device suitable for use in accordance with IEC 61508 and IEC 61511[6)10)]	**C20**
Namur	
Namur NE43 compliant, device preset to failsafe < 3.6 mA[6)]	**N07**
Tagging	
Stainless steel tag [69 mm x 50 mm (2.71 x 1.97 inch)]	
Measuring-point number / identification (max. 27 characters) specify in plain text	**Y15**
Operating Instructions	
All literature is available to download for free, in a range of languages, at	

http://www.siemens.com/processinstrumentation/documentation

	Article No
Accessories	
Handheld programmer, Intrinsically safe, EEx ia (LUI enabled)	**7ML1930-1BK**
HART modem/USB (for use with a PC and SIMATIC PDM)	**7MF4997-1DB**
One metallic cable gland M20 x 1.5, rated -40 ... +80 °C (-40 ... +176 °F), HART (two are required)[6)]	**7ML1930-1AP**
One metallic cable gland M20 x 1.5, rated -40 ... +80 °C (-40 ... +176 °F), PROFIBUS PA and FOUNDATION Fieldbus (two are required)[8)]	**7ML1930-1AQ**
SITRANS RD100, loop powered display - see Chapter 7	**7ML5741-.....-.**
SITRANS RD150, remote digital display for 4 ... 20 mA and HART devices - see Chapter 7	**7ML5742-.....-....**
SITRANS RD200, universal input display with Modbus conversion - see Chapter 7	**7ML5740-.....-..**
SITRANS RD300, dual line display with totalizer and linearization curve and Modbus conversion - see Chapter 7	**7ML5744-.....-..**
For applicable back up point level switch - see point level measurement section	

1) Available with Process connection options AA ... FB & FF only.
2) Available with Approval options A, B, C, L only.
3) Available with Process connections FC ... FF only.
4) Available with Process connection options AA ... EC & FF only.
5) Max. range 10 m (32.8 ft), dk > 3 [20 m (66 ft) and dk > 1.6 if installed in a stillpipe].
6) Applicable with Communication option 2 only.
7) Available with Enclosure option 1 only.
8) Available with Communication options 1 and 3 only.
9) Available with Enclosure option 0 only.
10) Available with Approval options A, B, C, D, E, K, L only.

© Siemens 2020

Selection and ordering data

SITRANS LR250 hygienic encapsulated Specials

For "Electronics Head only" follow the standard configuration and choose YY option on positions 9 and 10 of the full part number.

For example: 7ML5433-1YY20-1AA0 will order an electronics head for the following:

EHEDG EL Class 1 approval, 4 ... 20 mA HART, M20 cable entries, General purpose Haz Loc approval, pressure rating as per manual.

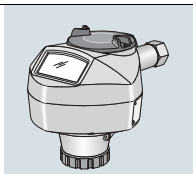

Spare Lens Kits (Lens and O-ring)

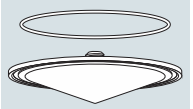

	Article No.
Kit, 2 inch, ISO 2852, HEA, Lens, silicone secondary O-ring	**A5E32572731**
Kit, 3 inch, ISO 2852, HEA, Lens, silicone secondary O-ring	**A5E32572745**
Kit, 4 inch, ISO 2852, HEA, Lens, silicone secondary O-ring	**A5E32572747**
Kit, DN 50, DIN 11851, HEA, Lens, silicone secondary O-ring	**A5E32572758**
Kit, DN 80, DIN 11851, HEA, Lens, silicone secondary O-ring	**A5E32572770**
Kit, DN 100, DIN 11851, HEA, Lens, silicone secondary O-ring	**A5E32572772**
Kit, DN 50, DIN 11864-1, HEA, Lens, silicone secondary O-ring	**A5E32572773**
Kit, DN 80, DIN 11864-1, HEA, Lens, silicone secondary O-ring	**A5E32572779**
Kit, DN 100, DIN 11864-1, HEA, Lens, silicone secondary O-ring	**A5E32572782**
Kit, DN 50, DIN 11864-2/3, HEA, Lens, silicone secondary O-ring	**A5E32572785**
Kit, DN 80, DIN11864-2/3, HEA, Lens, silicone secondary O-ring	**A5E32572790**
Kit, DN 100, DIN11864-2/3, HEA, Lens, silicone secondary O-ring	**A5E32572791**
Kit, Tuchenhagen, Type F, HEA, Lens, silicone secondary O-ring	**A5E32572794**
Kit, Tuchenhagen, Type N, HEA, Lens, silicone secondary O-ring	**A5E32572795**

Accessories (customer side process connection and FKM and EPDM seal for each size and type)

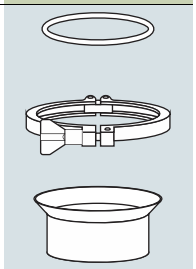

	Article No.
Kit DN50 DIN11864-1 GS Form A tank connection, EPDM Seal Class II	**A5E32910638**
Kit, DN80 DIN11864-1 GS Form A tank connection, EPDM Seal Class II	**A5E32910649**
Kit, DN100 DIN11864-1 GS Form A tank connection, EPDM Seal Class II	**A5E32910657**
Kit DN50 DIN11864-1 GS Form A tank connection, FKM Seal Class I	**A5E32910658**
Kit, DN80 DIN11864-1 GS Form A tank connection, FKM Seal Class I	**A5E32910671**
Kit, DN100 DIN11864-1 GS Form A tank connection, FKM Seal Class I	**A5E32910681**
Kit 2" ISO2852 tank connection, Clamp, Cleanable EPDM Seal Class II	**A5E32910686**
Kit 3" ISO2852 tank connection, Clamp, Cleanable EPDM Seal Class II	**A5E32910697**
Kit 4" ISO2852 tank connection, Clamp, Cleanable EPDM Seal Class II	**A5E32910708**
Kit 2" ISO2852 tank connection, Clamp, Cleanable FKM Seal	**A5E32910718**
Kit 3" ISO2852 tank connection, Clamp, Cleanable FKM Seal	**A5E32910723**
Kit 4" ISO2852 tank connection, Clamp, Cleanable FKM Seal	**A5E32910734**
Kit DN50 DIN11851 SC Tank connection, EPDM Seal Class II[11)]	**A5E32910746**
Kit DN80 DIN11851 SC Tank connection, EPDM Seal Class II[11)]	**A5E32910771**
Kit DN100 DIN11851 SC Tank connection, EPDM Seal Class II[11)]	**A5E32910780**
Kit DN50 DIN11851 SC Tank connection, FKM Seal Class II	**A5E32910784**
Kit DN80 DIN11851 SC Tank connection, FKM Seal Class II	**A5E32910789**
Kit DN100 DIN11851 SC Tank connection, FKM Seal Class II	**A5E32910790**
Kit DN50 DIN11864-2 Form A tank connection, M8 Hardware (nut/bolt/washer), EPDM Seal Class II	**A5E32910791**
Kit DN80 DIN11864-2 Form A tank connection, M10 Hardware (nut/bolt/washer), EPDM Seal Class II	**A5E32910793**
Kit DN100 DIN11864-2 Form A tank connection, M10 Hardware (nut/bolt/washer), EPDM Seal Class II	**A5E32910799**
Kit DN50 DIN11864-2 Form A tank connection, M8 Hardware (nut/bolt/washer), FKM Seal Class I	**A5E32910805**
Kit DN80 DIN11864-2 Form A tank connection, M10 Hardware (nut/bolt/washer), FKM Seal Class I	**A5E32910809**
Kit DN100 DIN11864-2 Form A tank connection, M10 Hardware (nut/bolt/washer), FKM Seal Class I	**A5E32910812**
Kit DN50 DIN11864-3 Form A tank connection, Clamp, EPDM Seal Class II	**A5E32910813**
Kit DN80 DIN11864-3 Form A tank connection, Clamp, EPDM Seal Class II	**A5E32910814**
Kit DN100 DIN11864-3 Form A tank connection, Clamp, EPDM Seal Class II	**A5E32910815**
Kit DN50 DIN11864-3 Form A tank connection, Clamp, FKM Seal Class I	**A5E32910816**
Kit DN80 DIN11864-3 Form A tank connection, Clamp, FKM Seal Class I	**A5E32910817**
Kit DN100 DIN11864-3 Form A tank connection, Clamp, FKM Seal Class I	**A5E32910818**
Kit Type F, Tuchenhagen, Clamp, EPDM Seal Class II (EHEDG only) - no tank connection	**A5E33489537**
Kit Type N, Tuchenhagen, Clamp, EPDM Seal Class II (EHEDG only) - no tank connection	**A5E33489543**
Kit Type F, Tuchenhagen, Clamp, FKM Seal Class I (EHEDG only) - no tank connection	**A5E33489828**
Kit Type N, Tuchenhagen, Clamp, FKM Seal Class I (EHEDG only) - no tank connection	**A5E33489830**

Ex-proof plugs

Ex-proof plugs kit, 1/2" NPT, qty 5	**A5E39979991**
Ex-proof plugs kit, M20, qty 5	**A5E39979992**

[11)] Class II for low fat applications when EPDM seal used on DIN11851

© Siemens 2020

Characteristic curves

DIN 11851 Sanitary/Hygienic nozzle/slotted nut: DN 50, DN 80, and DN 100
DIN 11864-1 Aseptic/Hygienic nozzle/slotted nut: DN 50, DN 80, and DN 100

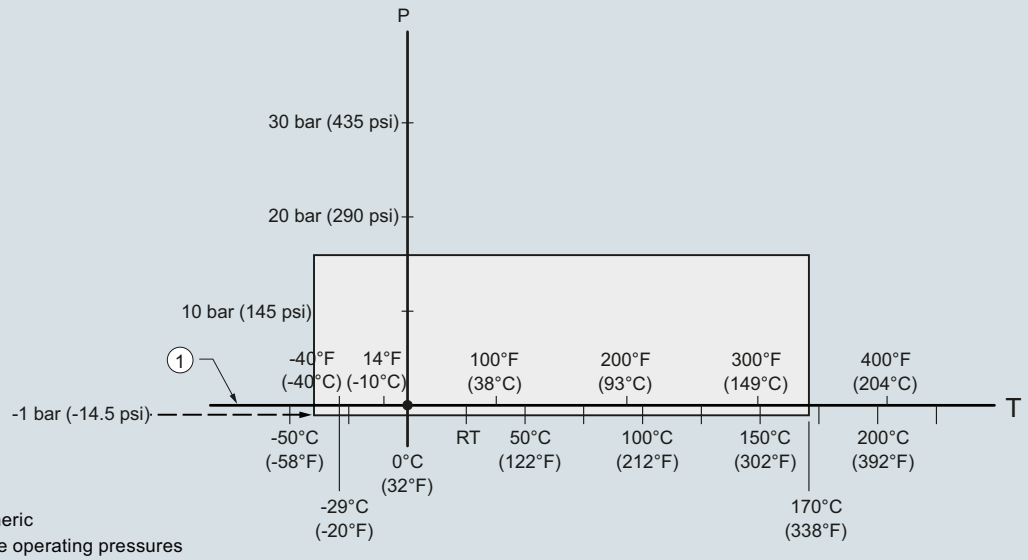

1 Atmospheric
P Allowable operating pressures
T Allowable operating temperatures

SITRANS LR250 Hygienic Encapsulated Antenna, process pressure/temperature rating curve

DIN 11864-2 Aseptic/Hygienic flanged: DN 50, DN 80, and DN 100

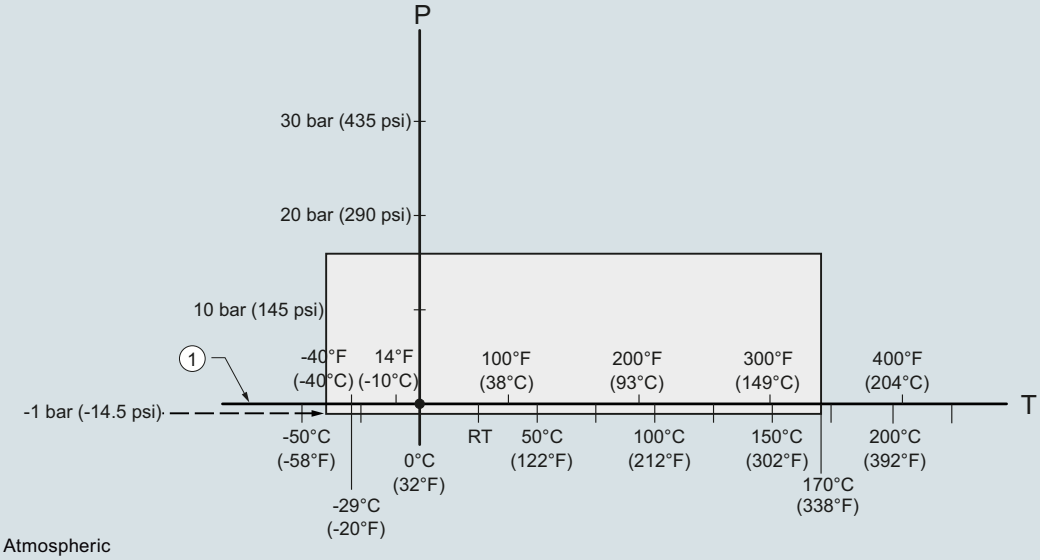

1 Atmospheric
P Allowable operating pressures
T Allowable operating temperatures

Note: For pressure applications, all attachment hardware must be suitably rated.

SITRANS LR250 Hygienic Encapsulated Antenna, process pressure/temperature rating curve

© Siemens 2020

Characteristic curves (continued)

DIN 11864-3 Aseptic/Hygienic clamp: DN 50, DN 80, and DN 100
IS0 2852 Sanitary/Hygienic clamp: 2", 3", and 4"
Tuchenhagen Varivent face seal clamp: Type N (68 mm) and Type F (50 mm)

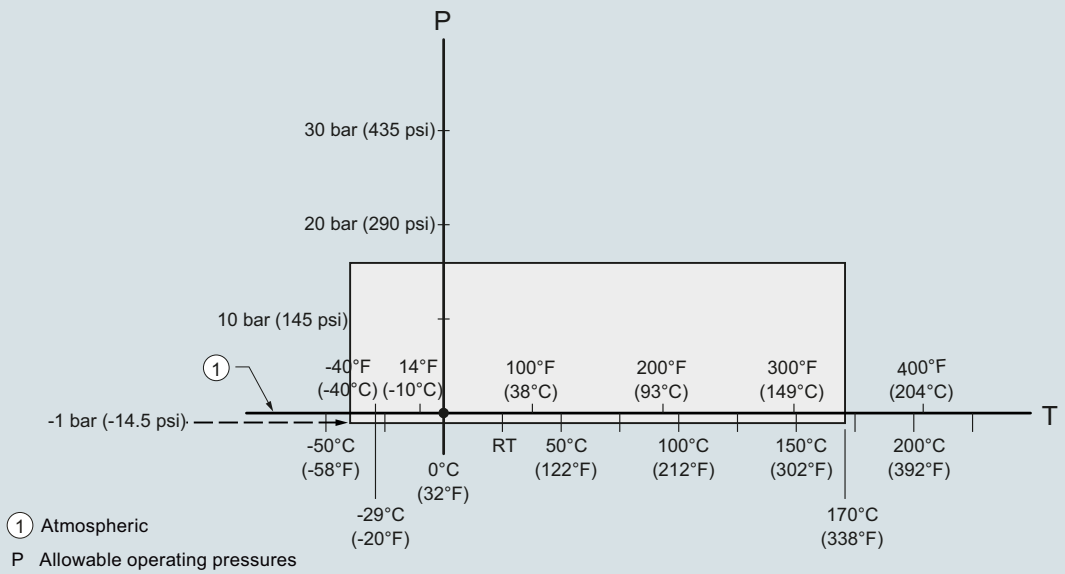

1 Atmospheric
P Allowable operating pressures
T Allowable operating temperatures

Note: For pressure applications, all clamps must be rated accordingly.

SITRANS LR250 Hygienic Encapsulated Antenna, process pressure/temperature rating curve

© Siemens 2020

Dimensional drawings

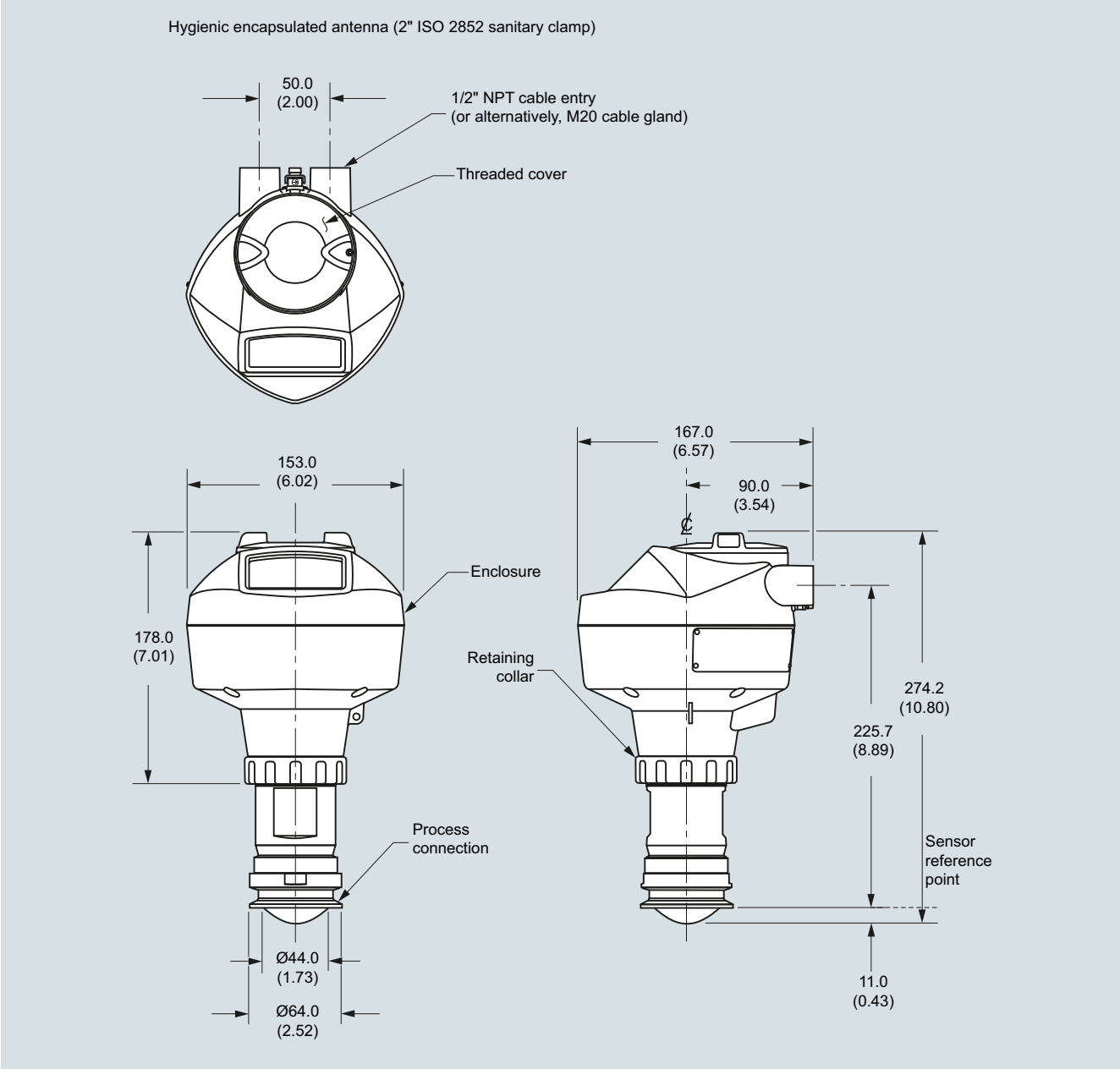

SITRANS LR250 Hygienic Encapsulated Antenna (2" ISO 2852 sanitary clamp), dimensions in mm (inch)

© Siemens 2020

Dimensional drawings (continued)

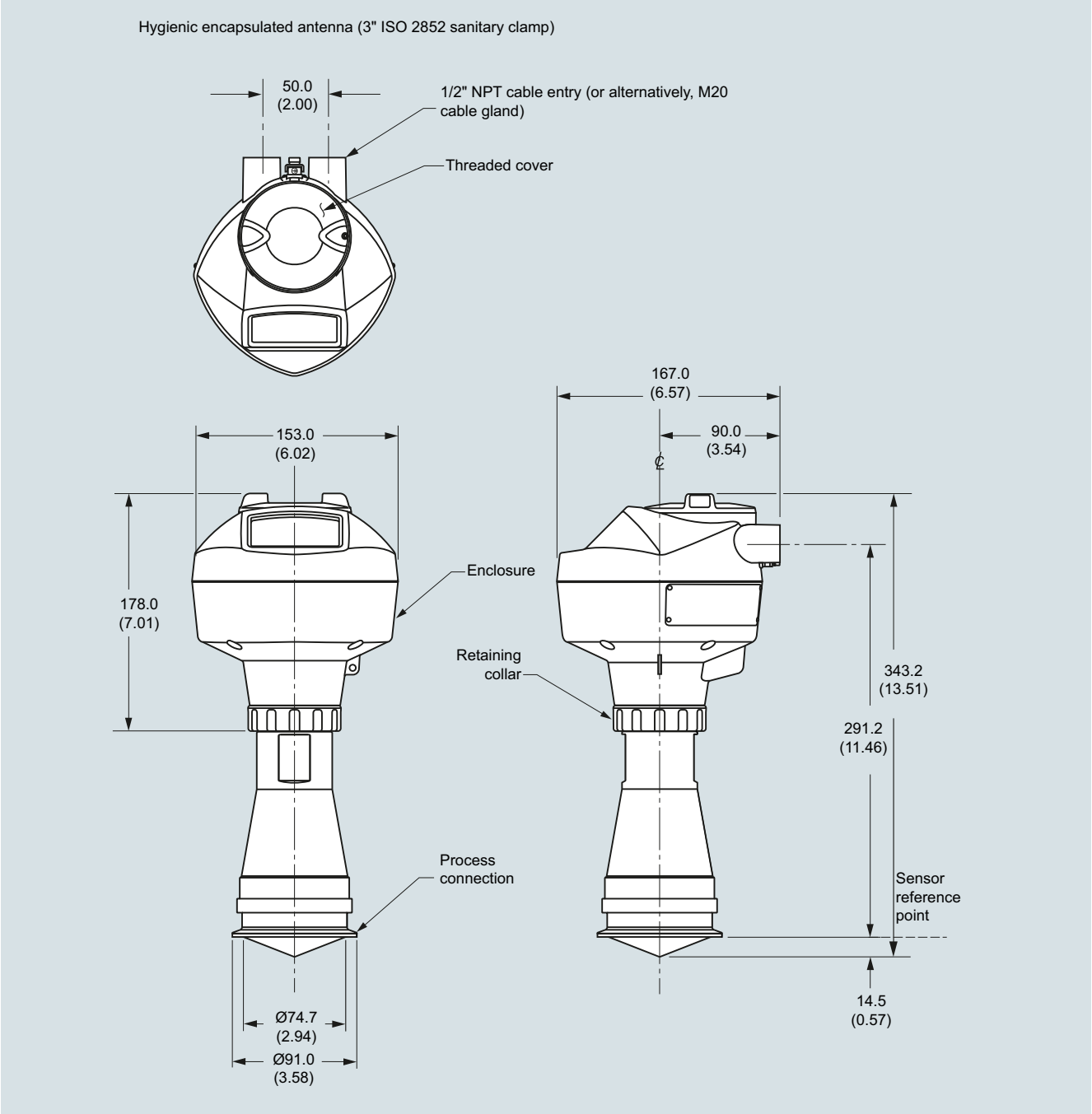

SITRANS LR250 Hygienic Encapsulated Antenna (3" ISO 2852 sanitary clamp), dimensions in mm (inch)

© Siemens 2020

Dimensional drawings (continued)

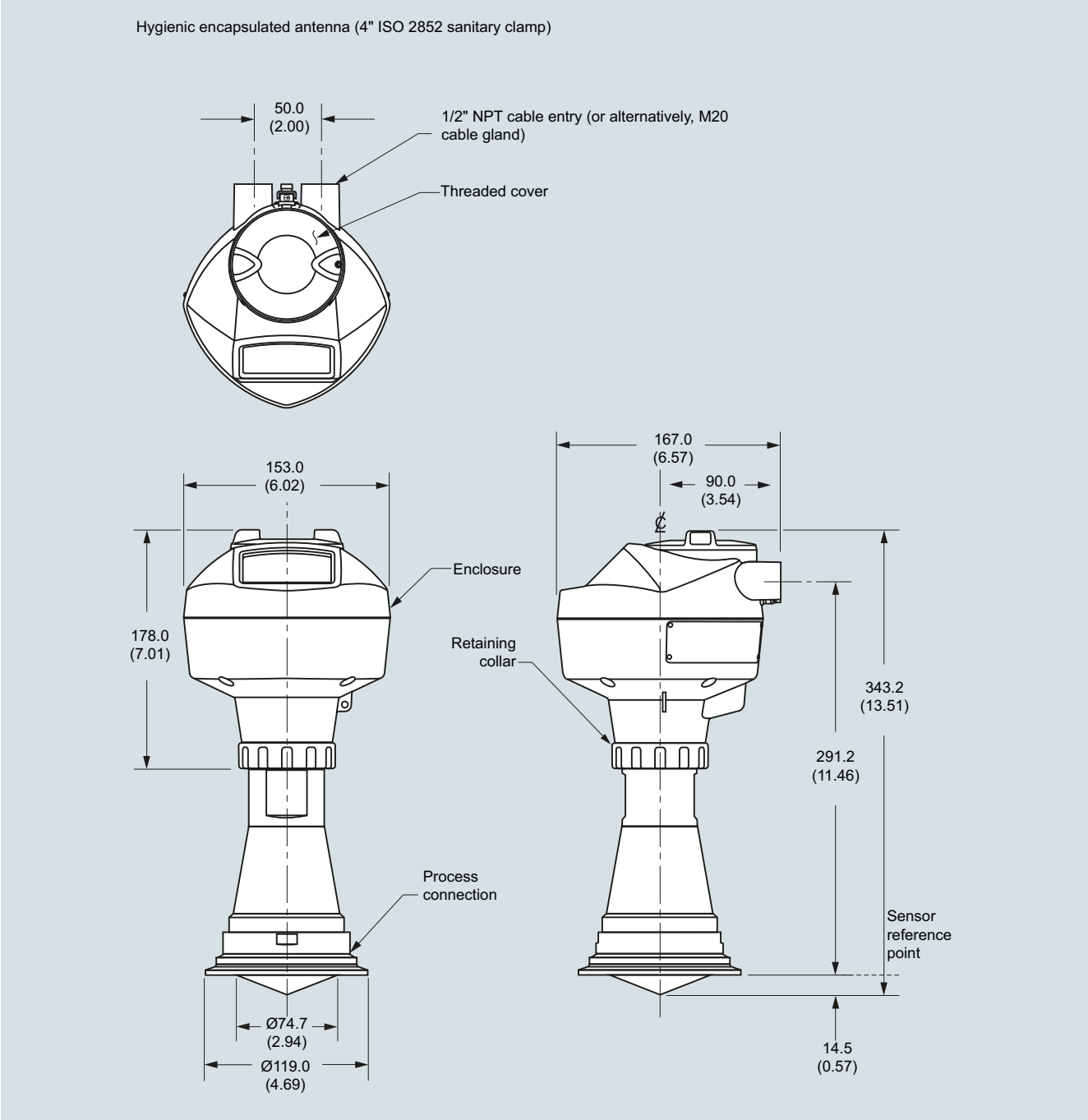

SITRANS LR250 Hygienic Encapsulated Antenna (4" ISO 2852 sanitary clamp), dimensions in mm (inch)

© Siemens 2020

Dimensional drawings (continued)

Hygienic encapsulated antenna (DN 50 nozzle/slotted nut to DIN 11851)

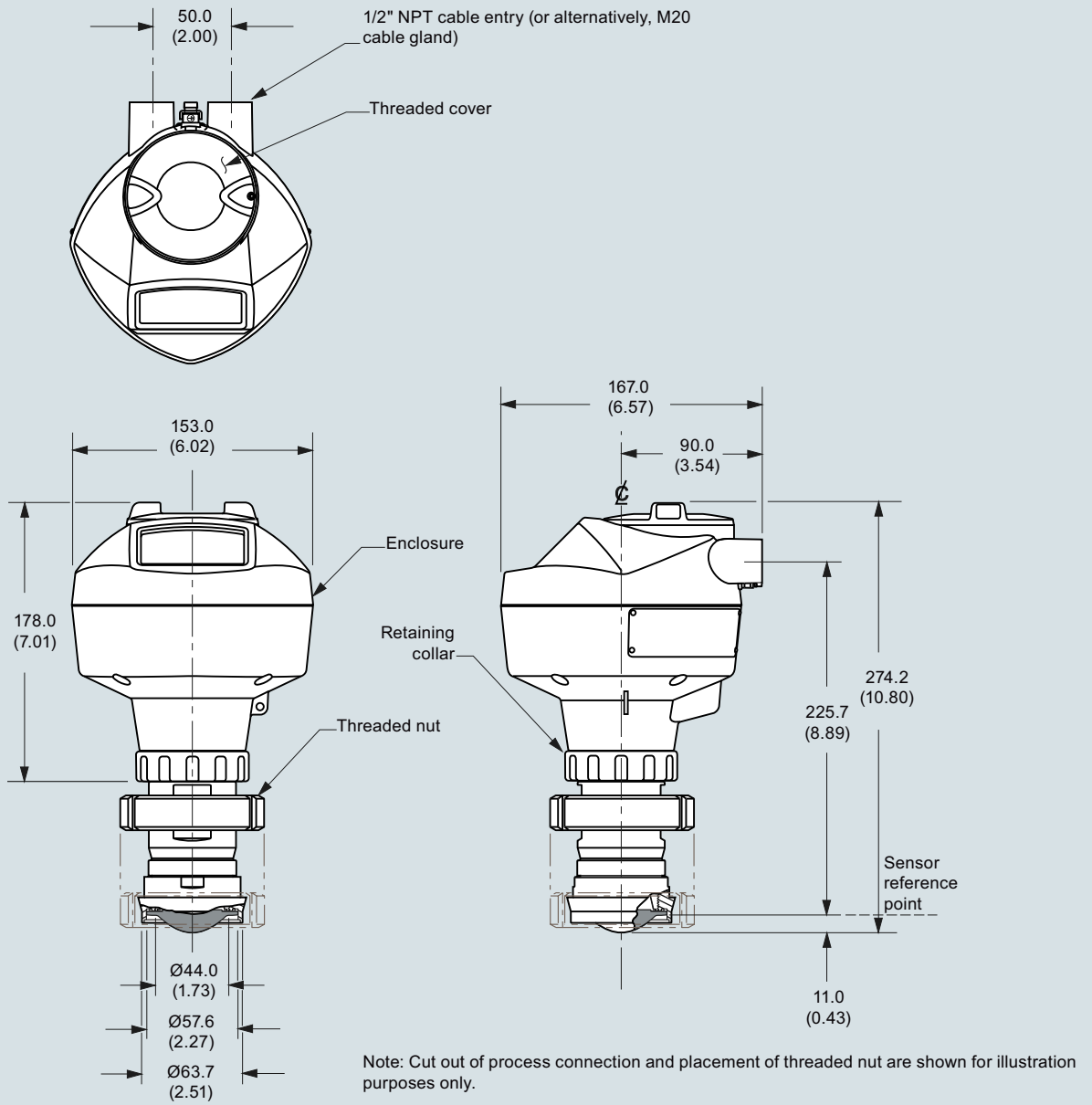

Note: Cut out of process connection and placement of threaded nut are shown for illustration purposes only.

SITRANS LR250 Hygienic Encapsulated Antenna (DN 50 nozzle/slotted nut to DIN 11851), dimensions in mm (inch)

© Siemens 2020

Dimensional drawings (continued)

Hygienic encapsulated antenna (DN 80 nozzle/slotted nut to DIN 11851)

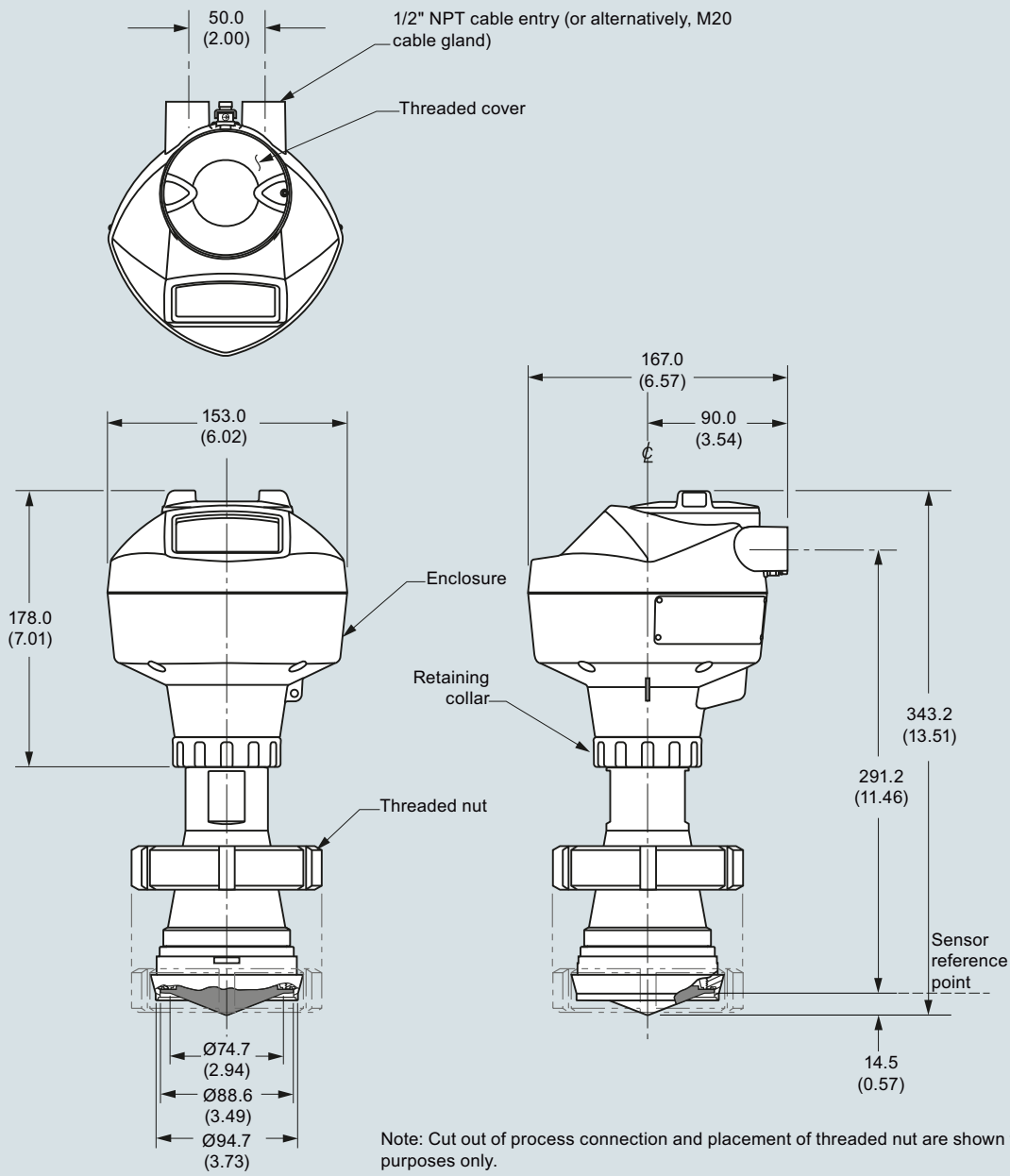

Note: Cut out of process connection and placement of threaded nut are shown for illustration purposes only.

SITRANS LR250 Hygienic Encapsulated Antenna (DN 80 nozzle/slotted nut to DIN 11851), dimensions in mm (inch)

© Siemens 2020

Dimensional drawings (continued)

Hygienic encapsulated antenna (DN 100 nozzle/slotted nut to DIN 11851)

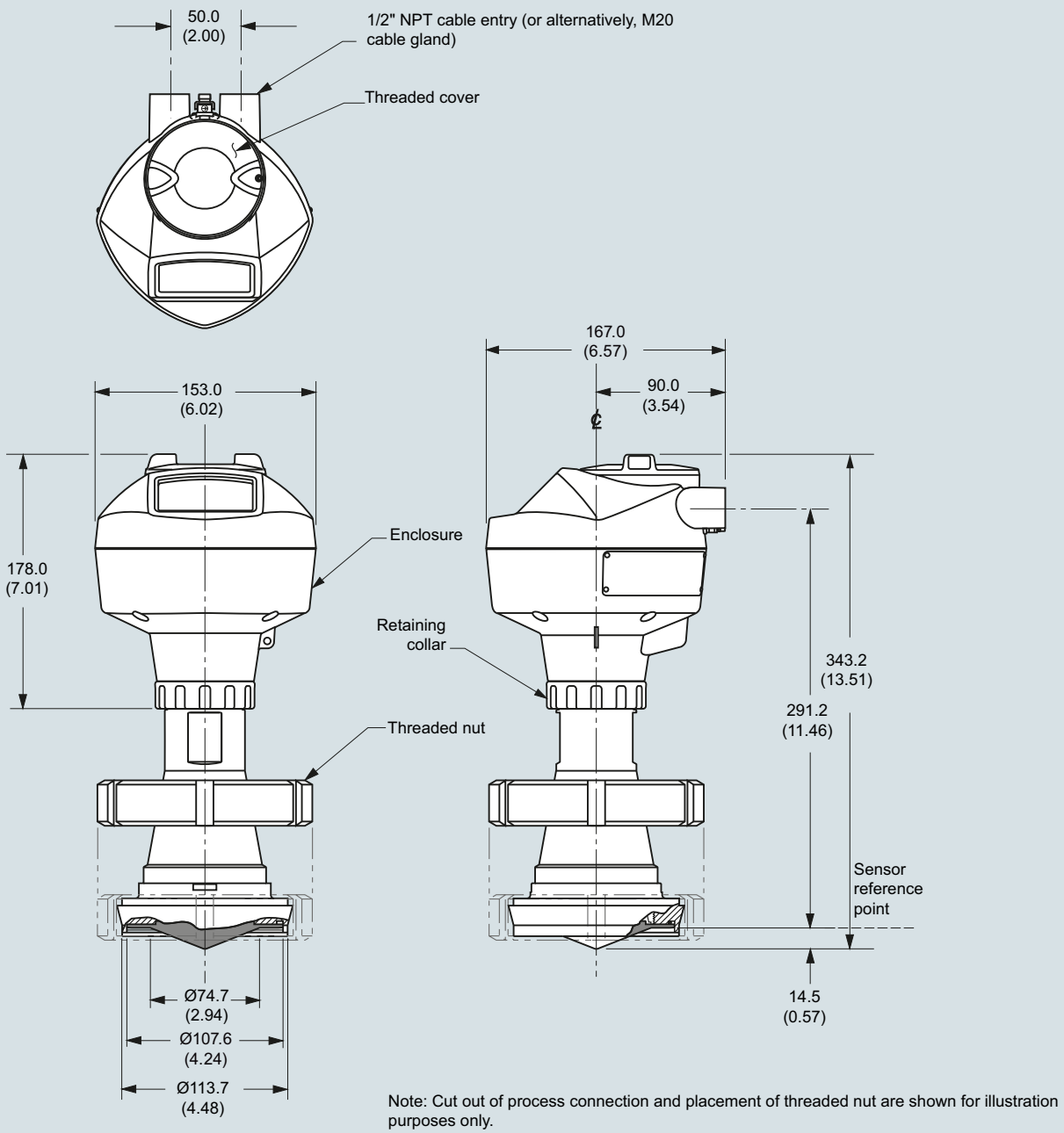

Note: Cut out of process connection and placement of threaded nut are shown for illustration purposes only.

SITRANS LR250 Hygienic Encapsulated Antenna (DN 100 nozzle/slotted nut to DIN 11851), dimensions in mm (inch)

© Siemens 2020

Dimensional drawings (continued)

Hygienic encapsulated antenna (DN 50 aseptic clamp to DIN 11864-1)

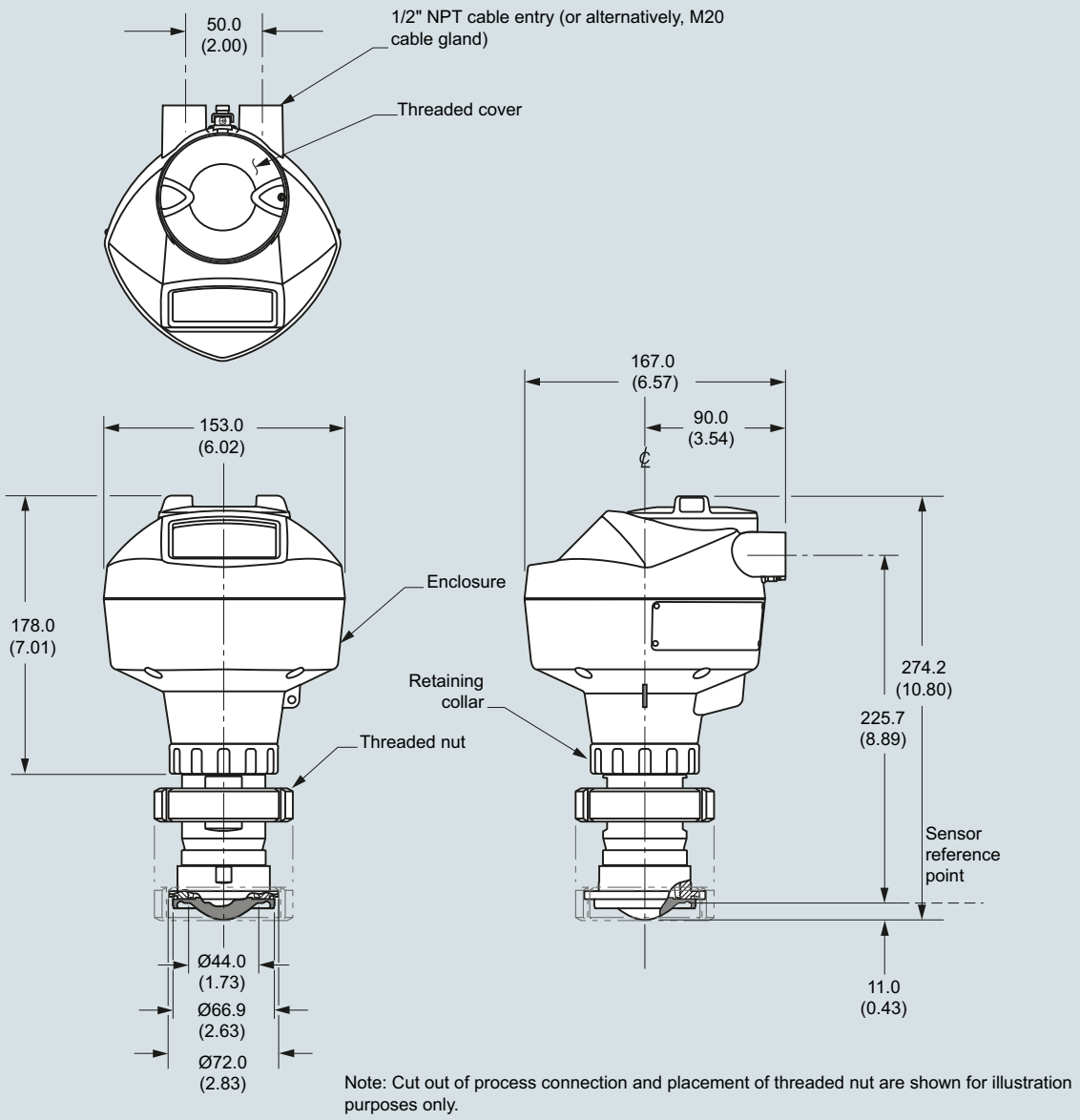

Note: Cut out of process connection and placement of threaded nut are shown for illustration purposes only.

SITRANS LR250 Hygienic Encapsulated Antenna (DN 50 aseptic clamp to DIN 11864-1), dimensions in mm (inch)

© Siemens 2020

Dimensional drawings (continued)

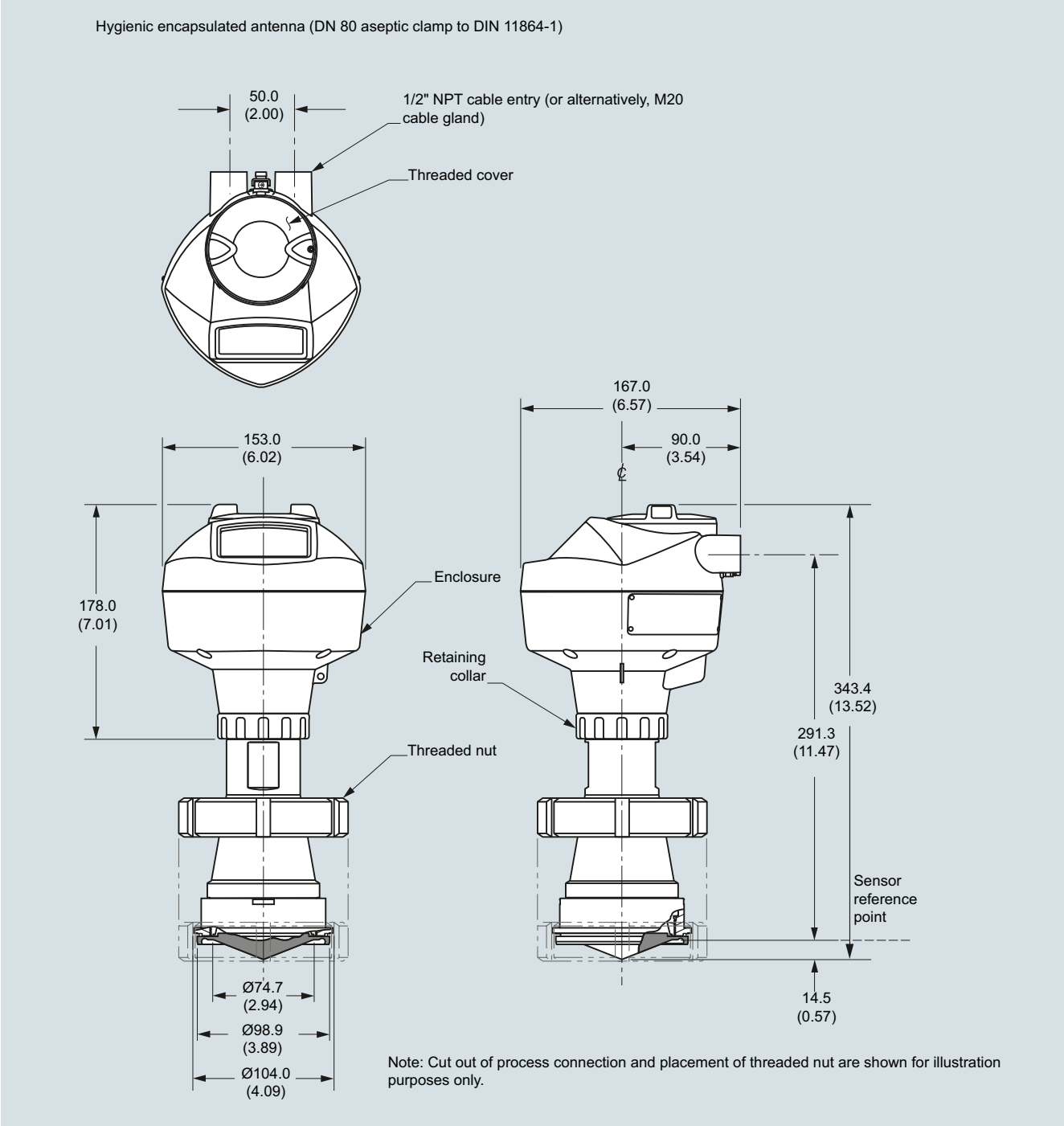

SITRANS LR250 Hygienic Encapsulated Antenna (DN 80 aseptic clamp to DIN 11864-1), dimensions in mm (inch)

© Siemens 2020

Dimensional drawings (continued)

Hygienic encapsulated antenna (DN 100 aseptic clamp to DIN 11864-1)

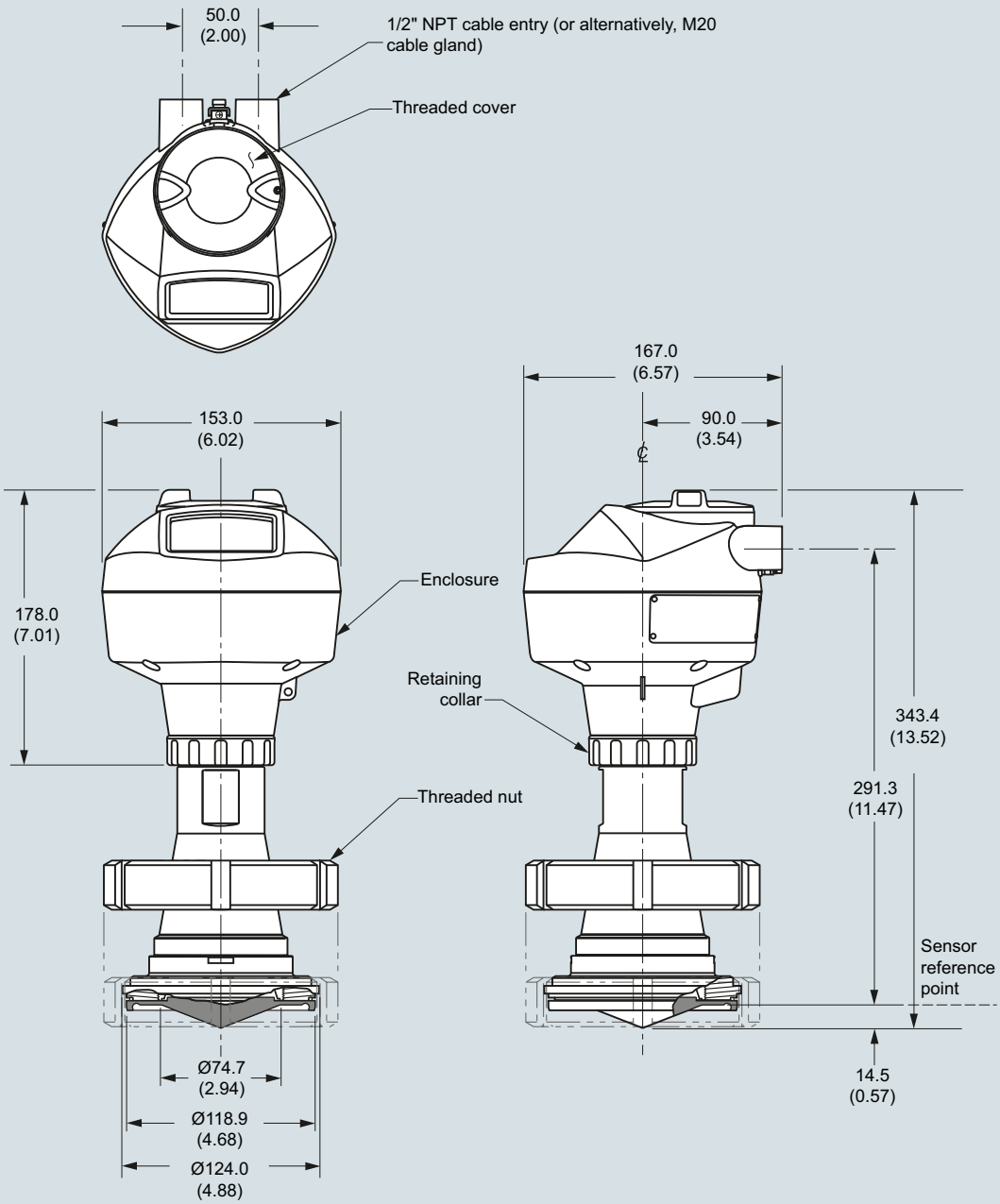

Note: Cut out of process connection and placement of threaded nut are shown for illustration purposes only.

SITRANS LR250 Hygienic Encapsulated Antenna (DN 100 aseptic clamp to DIN 11864-1), dimensions in mm (inch)

© Siemens 2020

Dimensional drawings (continued)

Hygienic encapsulated antenna (DN 50 aseptic flange to DIN 11864-2)

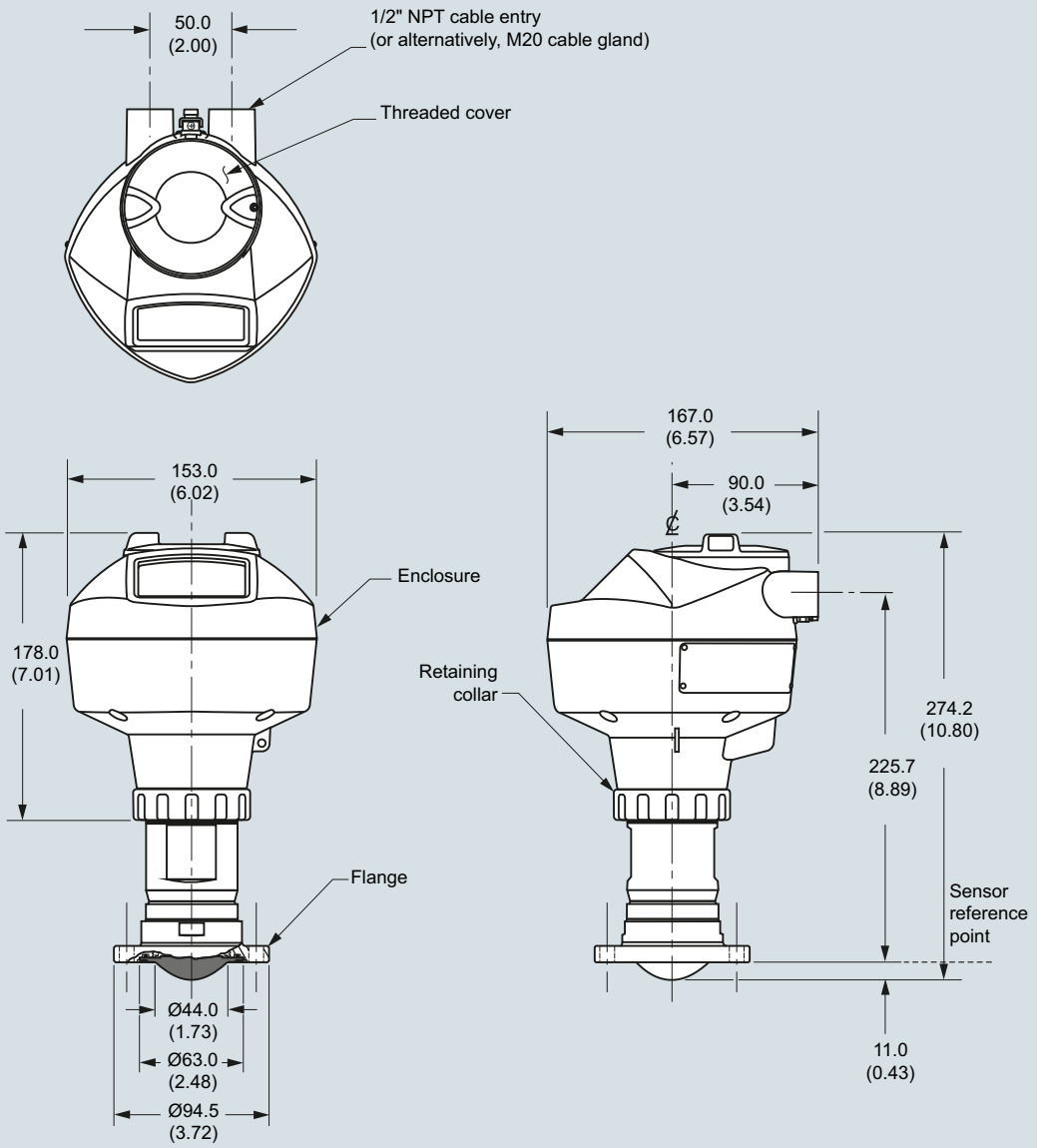

Note: Cut out of process connection and flange are shown for illustration purposes only.

SITRANS LR250 Hygienic Encapsulated Antenna (DN 50 aseptic flange to DIN 11864-2), dimensions in mm (inch)

© Siemens 2020

Dimensional drawings (continued)

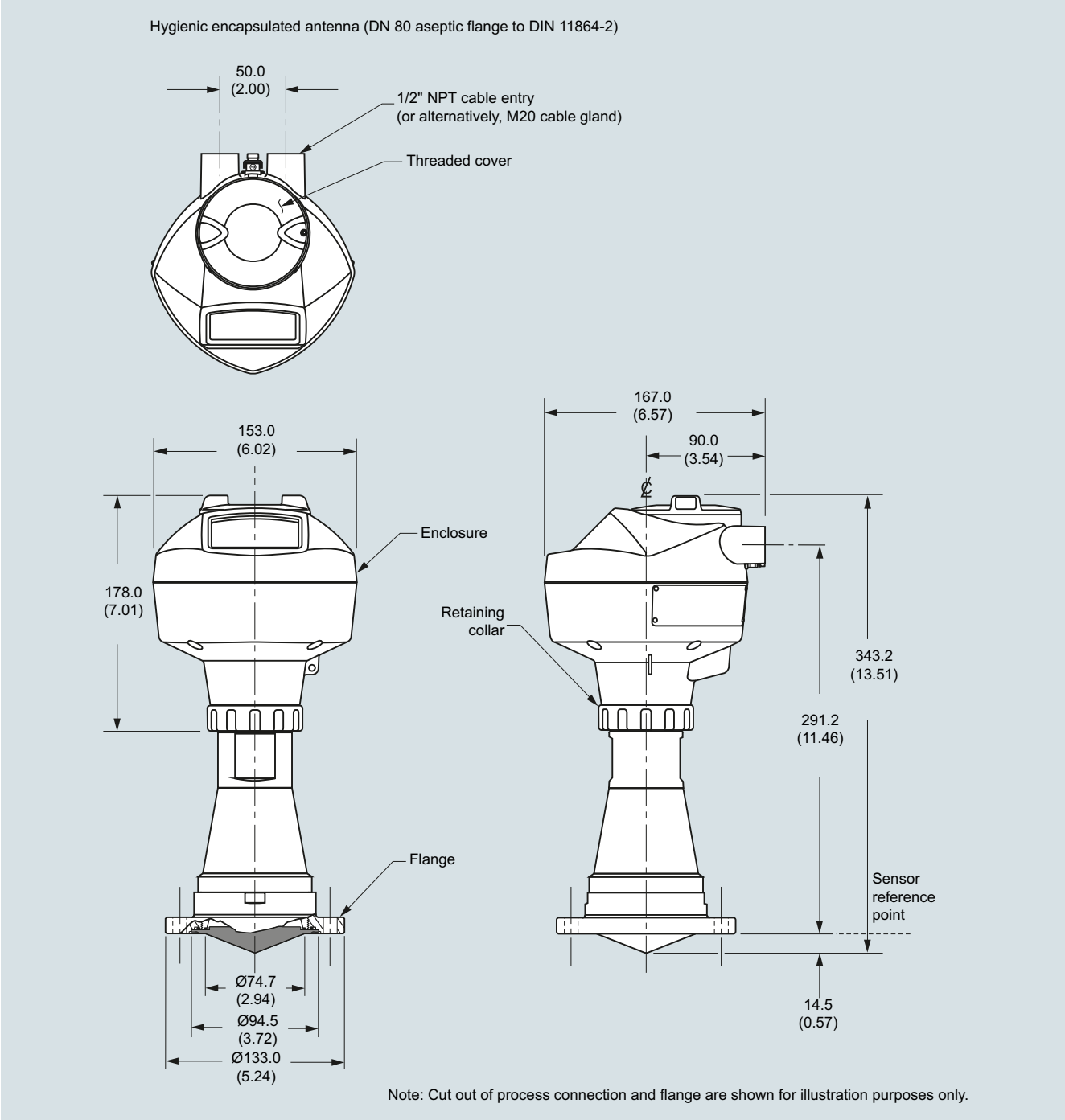

SITRANS LR250 Hygienic Encapsulated Antenna (DN 80 aseptic flange to DIN 11864-2), dimensions in mm (inch)

© Siemens 2020

Dimensional drawings (continued)

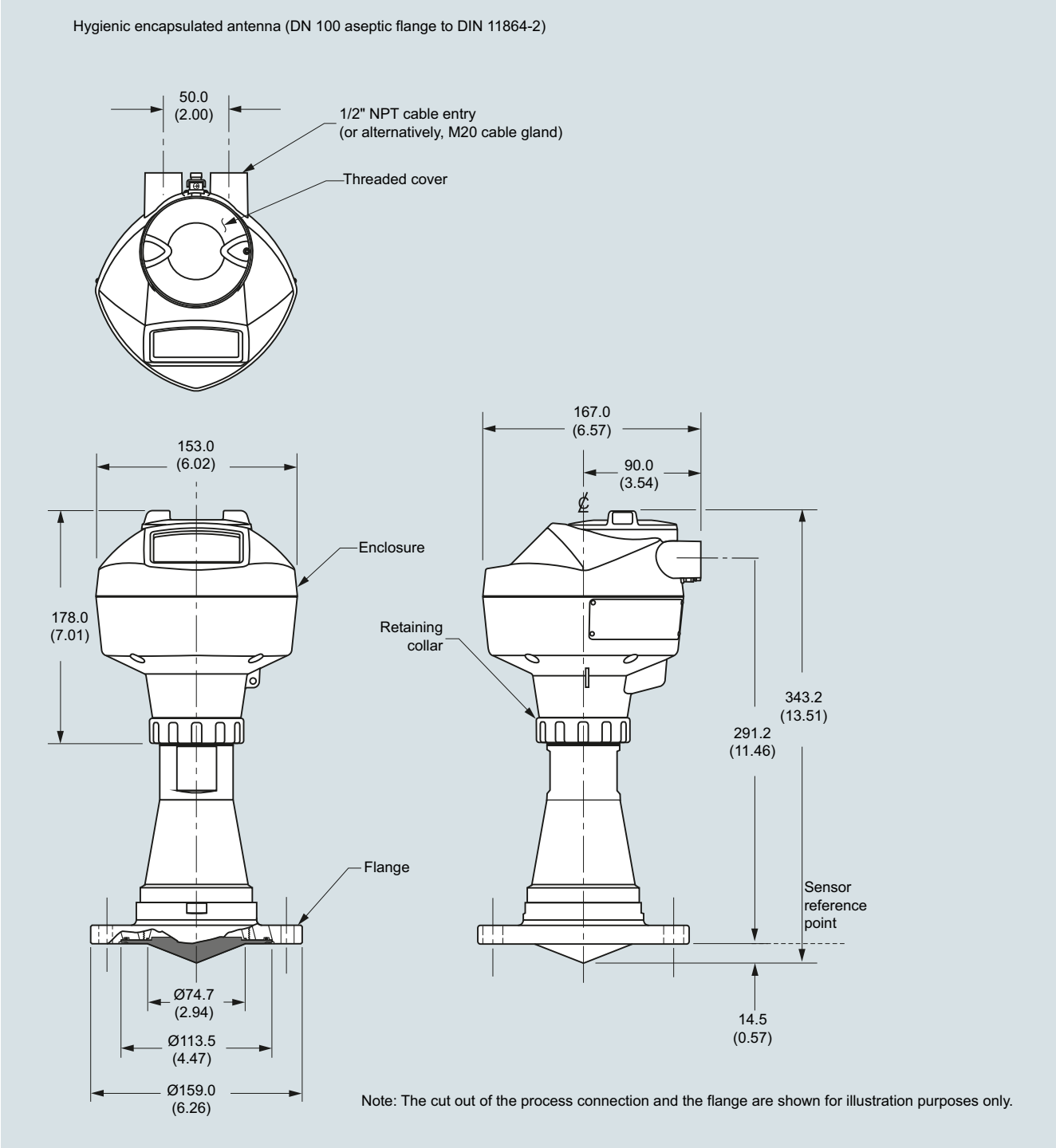

SITRANS LR250 Hygienic Encapsulated Antenna (DN 100 aseptic flange to DIN 11864-2), dimensions in mm (inch)

© Siemens 2020

Dimensional drawings (continued)

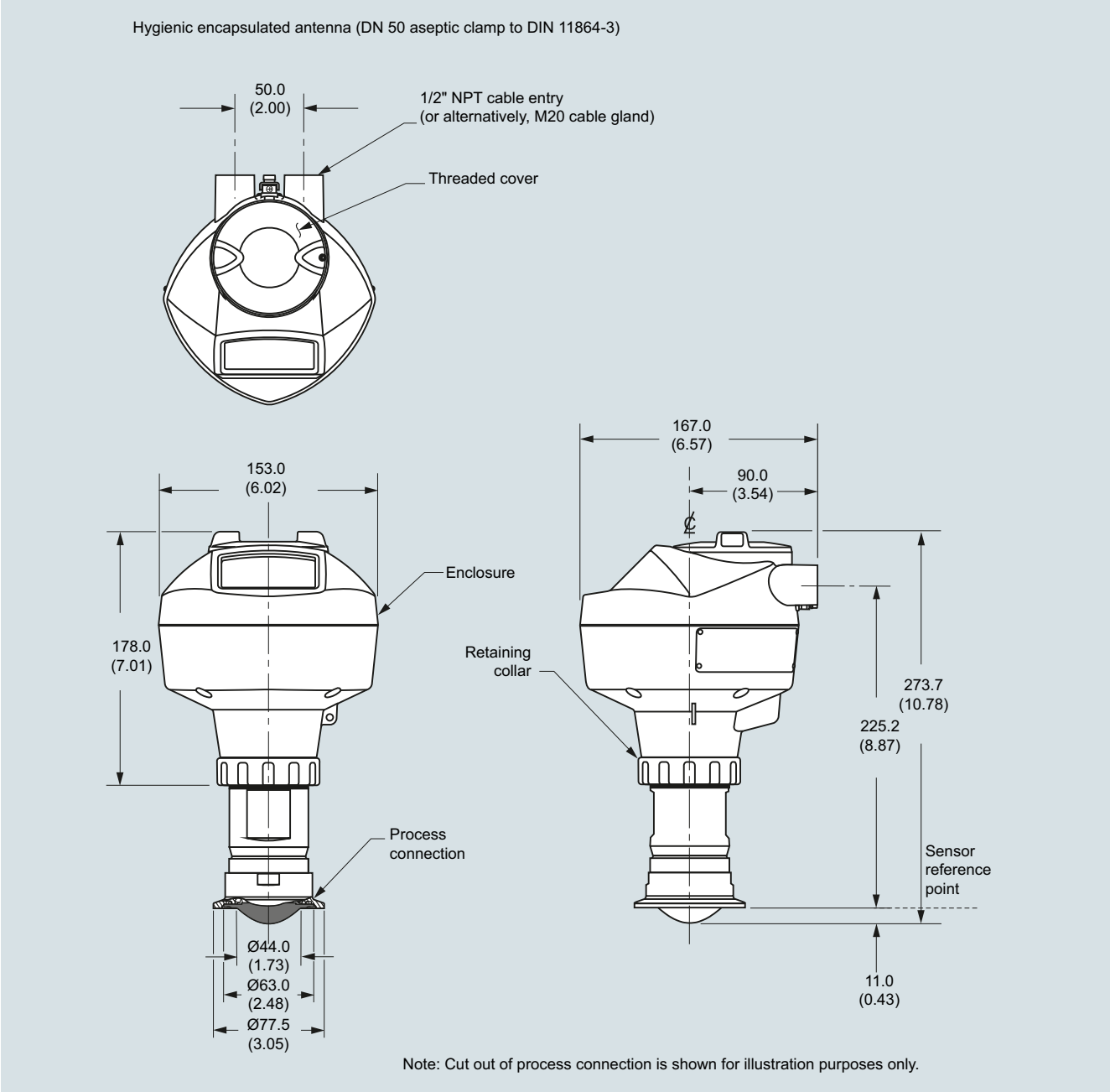

SITRANS LR250 Hygienic Encapsulated Antenna (DN 50 aseptic clamp to DIN 11864-3), dimensions in mm (inch)

© Siemens 2020

Dimensional drawings (continued)

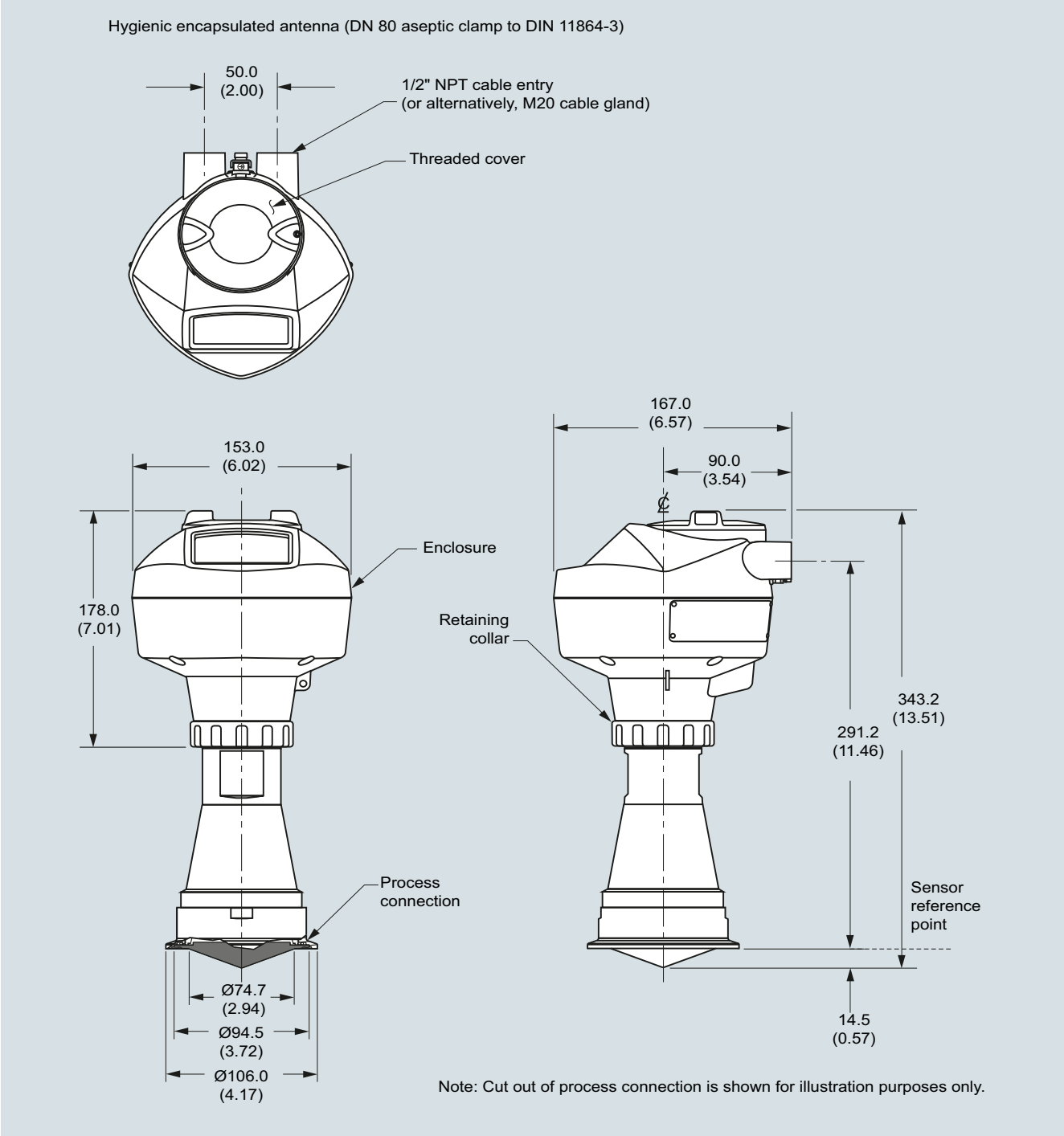

SITRANS LR250 Hygienic Encapsulated Antenna (DN 80 aseptic clamp to DIN 11864-3), dimensions in mm (inch)

© Siemens 2020

Dimensional drawings (continued)

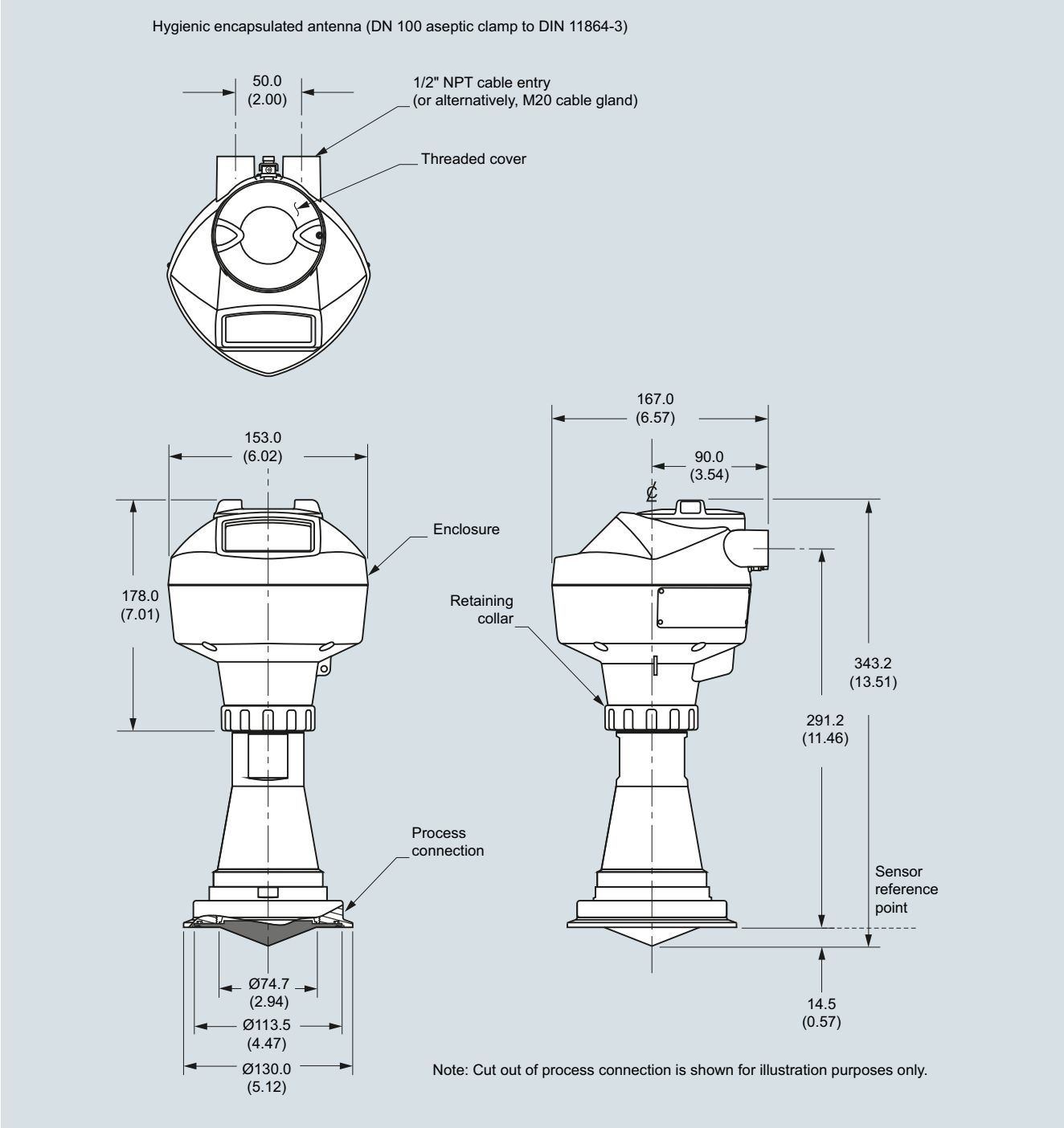

SITRANS LR250 Hygienic Encapsulated Antenna (DN 100 aseptic clamp to DIN 11864-3), dimensions in mm (inch)

© Siemens 2020

Dimensional drawings (continued)

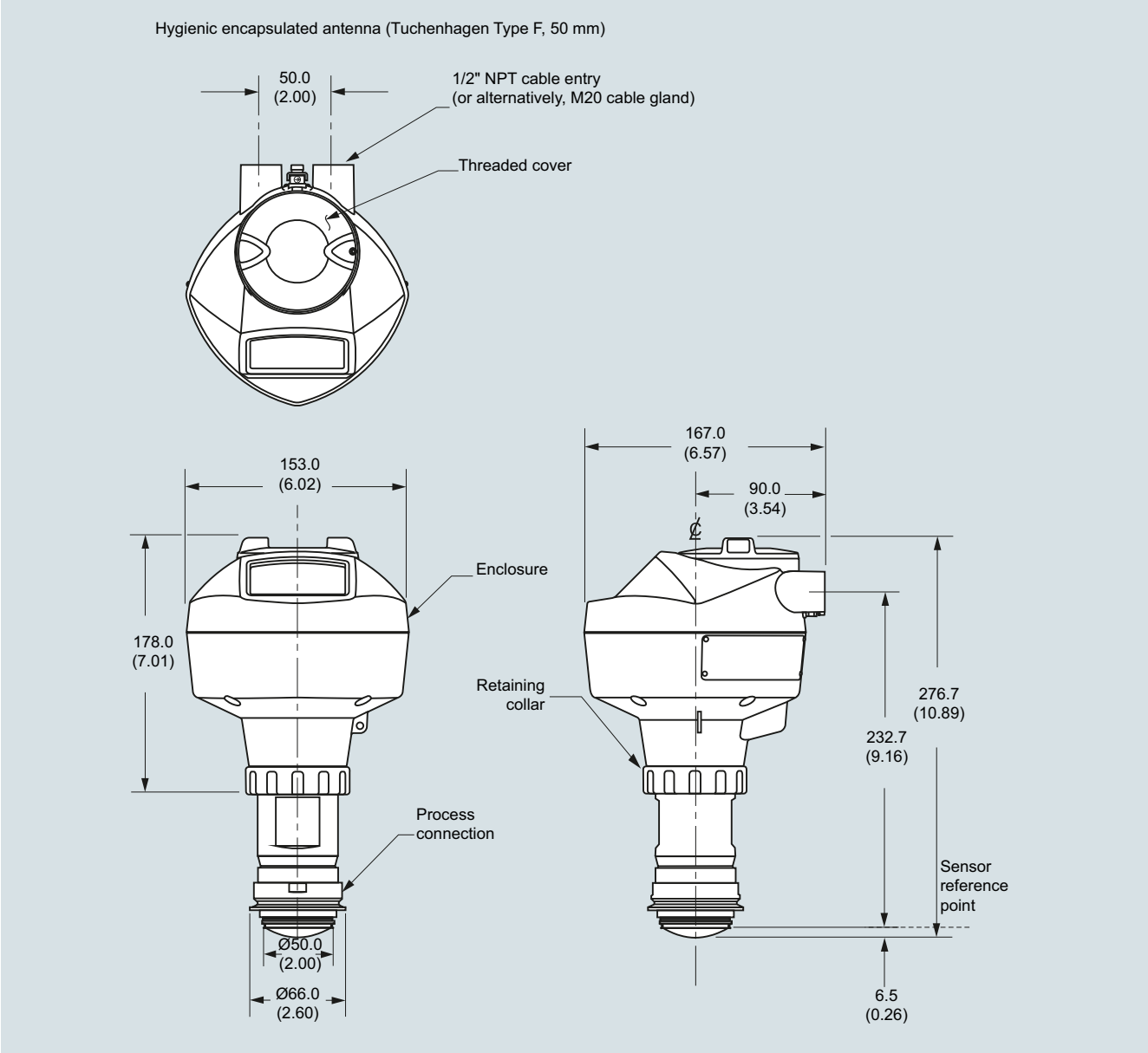

SITRANS LR250 Hygienic Encapsulated Antenna (Tuchenhagen Type F), dimensions in mm (inch)

© Siemens 2020

Dimensional drawings (continued)

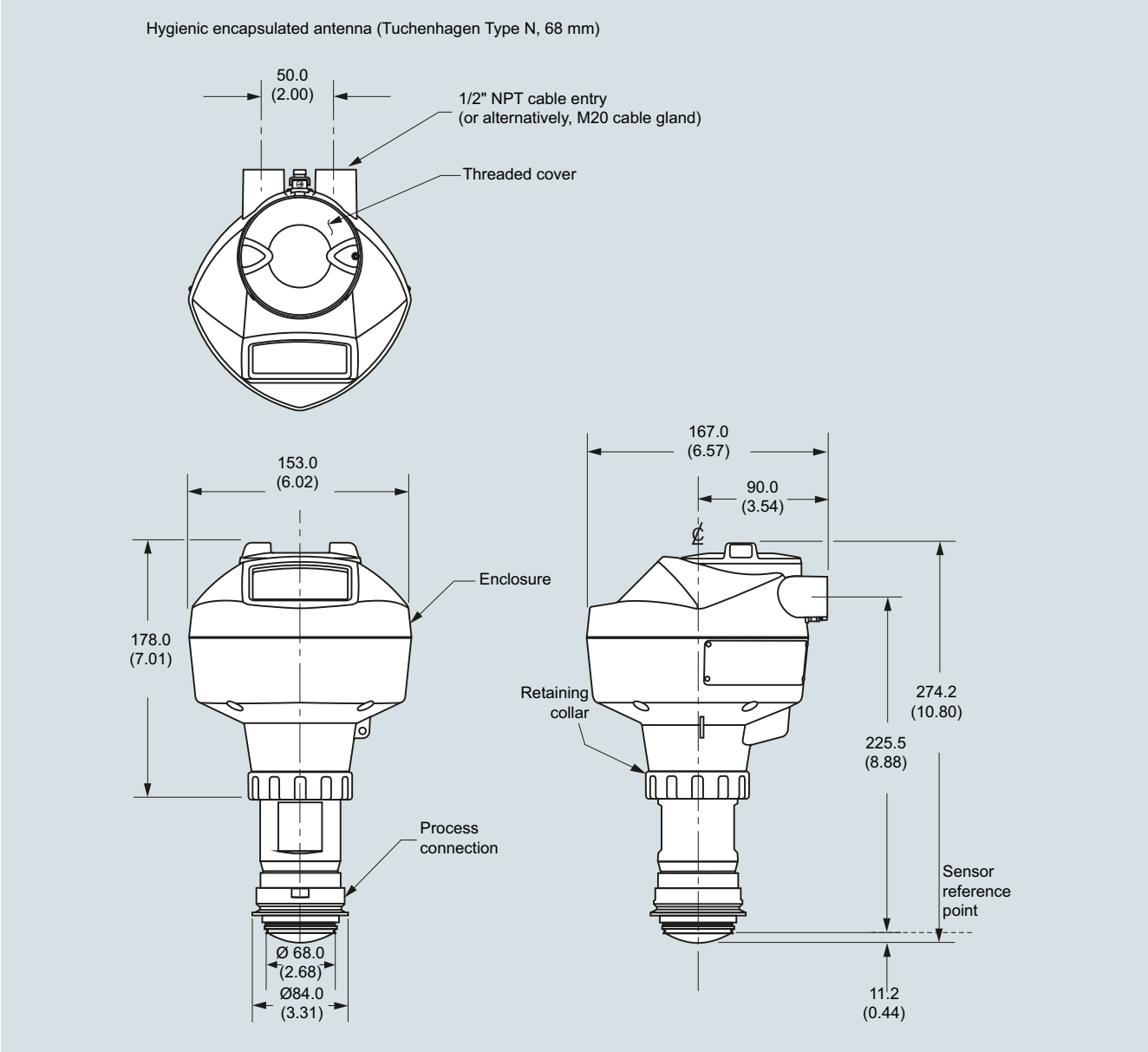

SITRANS LR250 Hygienic Encapsulated Antenna (Tuchenhagen Type N), dimensions in mm (inch)

© Siemens 2020

Circuit diagrams

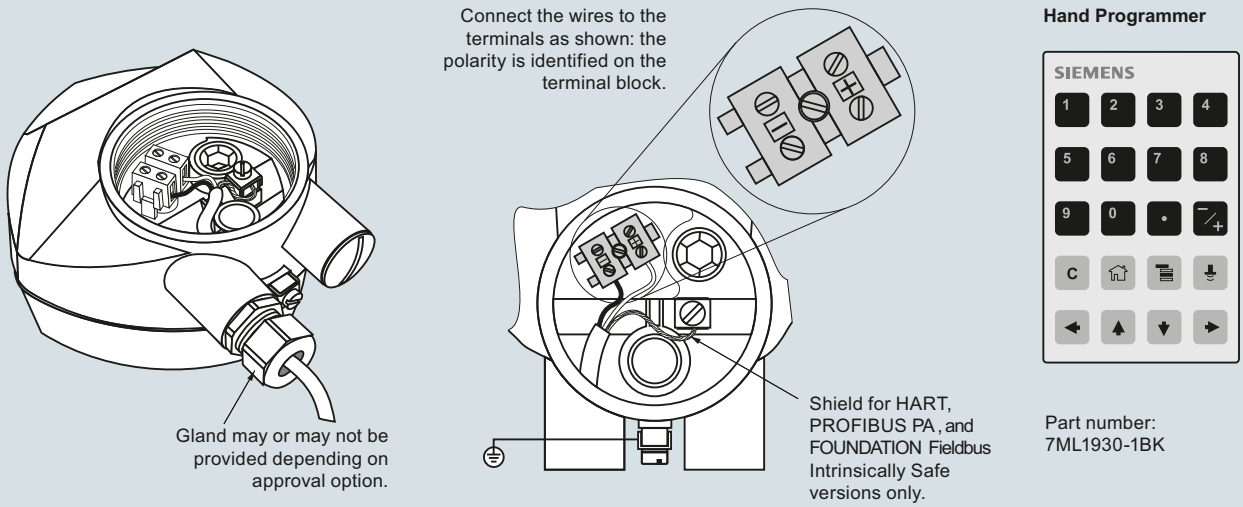

Notes:

1. DC terminal shall be supplied from a source providing electrical isolation between the input and output, to meet the applicable safety requirements of IEC 61010-1.
2. All field wiring must have insulation suitable for rated input voltages.
3. Use shielded twisted pair cable (14 ... 22 AWG) for HART version.
4. Separate cables and conduit may be required to conform to standard instrumentation wiring practices or electrical codes.

SITRANS LR250 connections

© Siemens 2020

Overview

The SITRANS LR460 is a 4-wire, 24 GHz FMCW radar level transmitter with extremely high signal-to-noise ratio and advanced signal processing for continuous monitoring of solids up to 100 m (328 ft). It is ideal for measurement in extreme dust and high temperature.

Benefits

- Process Intelligence for advanced signal processing and quick and easy adjustment
- Self-guided quick start wizard for plug and play startup
- 24 GHz provides superior reflective properties on solids surfaces
- 100 m (328 ft) range for long-range and difficult applications
- Easy Aimer optimizes signal quality on sloped surfaces
- Programming using infrared Intrinsically Safe handheld programmer or with SIMATIC PDM or HART handheld device

Application

SITRANS LR460 provides excellent results even during conditions of extreme dust. The integral Easy Aimer included on the SITRANS LR460 allows for easy positioning for optimum measurement on solids.

Process Intelligence onboard SITRANS LR460 means advanced signal processing is harnessed for reliable operation on both simple and difficult solids application.

SITRANS LR460 features a robust enclosure, flange and horn components. It is virtually unaffected by atmospheric or temperature conditions within the vessel.

An optional dust cap is available for sticky solids. Optional air purging is also available for extremely sticky applications.

Safe on-site local programming is simple using the Intrinsically Safe handheld programmer. SIMATIC PDM can be used for easy remote programming using HART or PROFIBUS PA.

The characteristics of 24 GHz and high signal-to-noise ratio contribute to exceptional signal reflection, regardless of the dielectric value of the medium.

- Key Applications: long-range dusty applications, cement powder, fly-ash, coal, flour, grain, plastics

Configuration

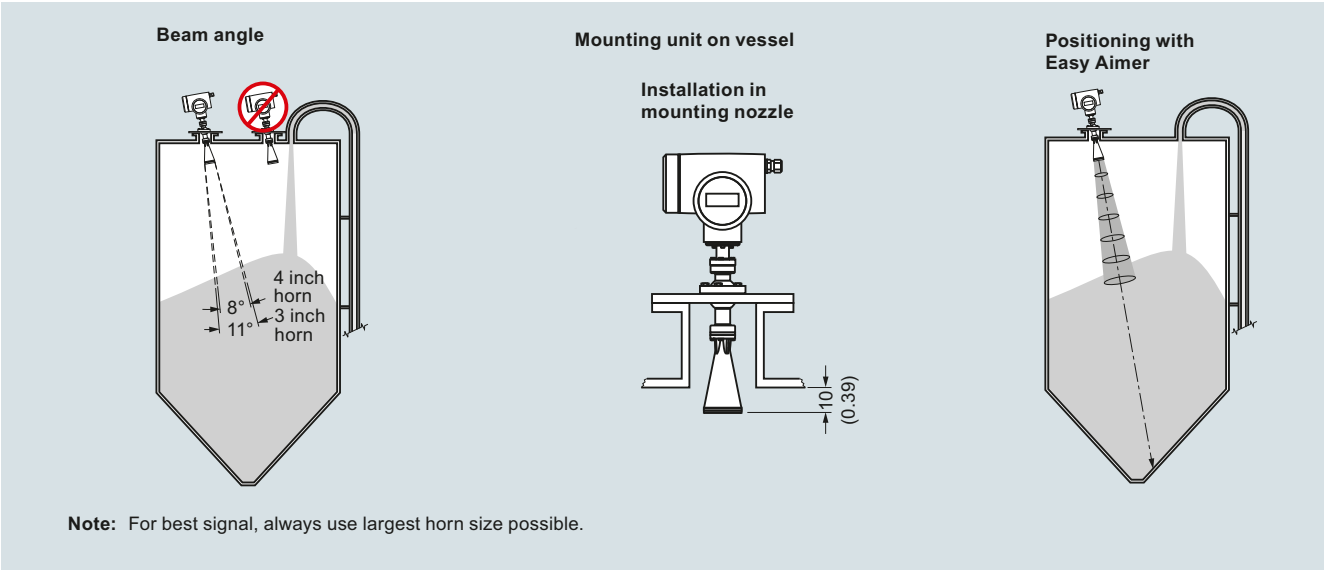

SITRANS LR460 installation, dimensions in mm (inch)

© Siemens 2020

Technical specifications

Mode of operation	
Measuring principle	FMCW radar level measurement
Frequency	24.2 ... 25.2 GHz FMCW
Measuring range	0.35 ... 100 m (1.15 ... 328.08 ft)
Output	
Analog output (HART)	
• Signal range	Optically isolated
• Load	Max. 600 Ω
• Fail-safe	mA signal programmable as high, low or hold (LOE)
Communication	HART, optional PROFIBUS PA
Digital output	Relay, NC or NO function, max. 50 V DC, max. 200 mA, rating 5 W
PROFIBUS PA protocol	Layer 1 and 2, Class A, Profile 3.01
Performance (Reference conditions according to IEC 60770-1)	
Non-linearity	Greater of 25 mm (1 inch) or 0.25 % of span (including hysteresis and non-repeatability), over the full ambient temperature range
Non-repeatability	≤ 10 mm (0.4 inch)
Rated operating conditions	
Amb. temperature for enclosure	-40 ... +65 °C (-40 ... +149 °F)
Storage temperature	-40 ... +65 °C (-40 ... +149 °F)
Location	Indoor/outdoor
Installation category	II
Pollution degree	4
Medium conditions	
Dielectric constant	$\varepsilon_r > 1.4$
Process temperature range	-40 ... +200 °C (-40 ... +392 °F)
Vessel pressure	0.5 bar g (7.25 psi g) maximum
Design	
Weight	Approx. 6.1 kg (13.4 lb) with 3 inch universal flange
Materials	
• Enclosure	Die-cast aluminum, painted
• Degree of protection	IP67/Type 4X/NEMA 4X/Type 6/ NEMA 6
• Cable inlet	2 x M20 x 1.5 or ½" NPT
Process connections	
• Universal flanges, 304 stainless steel, flat faced, with integral Easy Aimer	3 inch/80 mm, 4 inch/100 mm, 6 inch/150 mm (mates with flange EN 1092-1, ASME B16.5, or JIS B2238 bolt pattern), 0.5 bar g (7.25 psi g) max. pressure

Programming	
Intrinsically Safe Siemens handheld programmer (ordered separately)	Infrared receiver
• Approvals for handheld programmer	IS model: ATEX II 1G EEx ia IIC T4, CSA/FM Class I, Div. 1, Groups A, B, C, D T6 at max. ambient temperature of 40 °C (104 °F)
Handheld communicator	HART Communicator 375
PC	SIMATIC PDM
Display (local)	Alphanumeric LCD for readout and entry
Power supply	100 ... 230 V AC ± 15 % (50/60 Hz), 6 W (12 VA) or 24 V DC +25/-20 %, 6 W (optional)
Certificates and approvals	
General	$CSA_{US/C}$, CE, FM, RCM
Radio	European Radio (RED), Industry Canada, FCC, RCM
Hazardous Areas	CSA/FM Class II, Div. 1, Groups E, F, and G, Class III ATEX II 1D, 1/2 D, 2D T85 °C INMETRO ExtD A20 IP67 T85 °C EAC Ex DIP A20 T_a 85 °C IP67
Optional equipment	
Dust cap	PTFE
Air purge connection	1/8" NPT

© Siemens 2020

Selection and ordering data

	Article No.
SITRANS LR460 Radar level transmitter with horn ↗	**7ML5426-**
Continuous, non-contact, 100 m (328 ft) range, for challenging solids applications.	**0 ■ ■ ■ 0 - ■ ■ ■ 0**
↗ Click on the Article No. for the online configuration in the PIA Life Cycle Portal.	
Process connection	
Universal, flat faced, 0.5 bar g (7.25 psi g) maximum with integral Easy Aimer ball	
3 inch (80 mm)	**A**
4 inch (100 mm)	**B**
6 inch (150 mm)	**C**
Antenna	
3" horn antenna, fits 80 mm (3 inch) nozzles	**A**
3" horn antenna, fits 80 mm (3 inch) nozzles with 100 mm extension	**B**
3" horn antenna, fits 80 mm (3 inch) nozzles with 200 mm extension	**C**
3" horn antenna, fits 80 mm (3 inch) nozzles with 500 mm extension[1)]	**D**
3" horn antenna, fits 80 mm (3 inch) nozzles with 1 000 mm extension[1)]	**E**
4" horn antenna, fits 100 mm (4 inch) nozzles	**F**
4" horn antenna, fits 100 mm (4 inch) nozzles with 100 mm extension	**G**
4" horn antenna, fits 100 mm (4 inch) nozzles with 200 mm extension	**H**
4" horn antenna, fits 100 mm (4 inch) nozzles with 500 mm extension[1)]	**J**
4" horn antenna, fits 100 mm (4 inch) nozzles with 1 000 mm extension[1)]	**K**
Purge (self-cleaning) connection	
No purge connection	**0**
Purge connection	**1**
Output/Communication	
4 ... 20 mA, HART	**0**
PROFIBUS PA	**1**
Power supply/cable inlet	
100 ... 230 V AC	
• 2 x M20 x 1.5	**A**
• 2 x ½" NPT	**B**
24 V DC	
• 2 x M20 x 1.5	**C**
• 2 x ½" NPT	**D**
Approvals	
General Purpose, CSAUS/C, Industry Canada, FM, FCC, CE, RED, RCM	**A**
CSA/FM Class II, Div. 1, Groups E, F, and G, Class III	**B**
ATEX II ½ D T6, CE, RED	**C**

[1)] Available with Purge option 0 only.

	Order code
Further designs	
Please add "**-Z**" to Article No. and specify Order code(s).	
Stainless steel tag [69 x 50 mm (2.71 x 1.97 inch)]: Measuring-point number/identification (max. 27 characters); specify in plain text	**Y15**
Manufacturer's test certificate: M to DIN 55350, Part 18 and to ISO 9000	**C11**
Operating Instructions	
All literature is available to download for free, in a range of languages, at	
http://www.siemens.com/processinstrumentation/documentation	

Accessories	Article No.
Handheld programmer, Infra-red, Intrinsically Safe, EEx ia	**7ML5830-2AJ**
Dust cap, PTFE, for 3 inch/80 mm horn	**7ML1930-1BL**
Dust cap, PTFE, for 4 inch/100 mm horn	**7ML1930-1BM**
HART modem/USB (for use with a PC and SIMATIC PDM)	**7MF4997-1DB**
One metallic cable gland M20 x 1.5, rated -40 ... +80 °C (-40 ... +176 °F), HART[1)]	**7ML1930-1AP**
One metallic cable gland M20 x 1.5, rated -40 ... +80 °C (-40 ... +176 °F), PROFIBUS PA[1)]	**7ML1930-1AQ**
SITRANS RD100, loop powered display - see Chapter 7	**7ML5741-.....-.**
SITRANS RD150, remote digital display for 4 ... 20 mA and HART devices - see Chapter 7	**7ML5742-.....-....**
SITRANS RD200, universal input display with Modbus conversion - see Chapter 7	**7ML5740-.....-..**
SITRANS RD300, dual line display with totalizer and linearization curve and Modbus conversion - see Chapter 7	**7ML5744-.....-..**
For applicable back up point level switch - see point level measurement section	

[1)] Product shipped with plastic cable gland, rated to -20 °C. If -40 °C rating required, then metallic cable gland is recommended.

© Siemens 2020

Selection and ordering data

SITRANS LR460 Specials

	Article No.
Process connection part kits - non-pressure-rated	
SITRANS LR460,100 mm extension for horn antenna, no purge[1]	**A5E01087872**
SITRANS LR460, 200 mm extension for horn antenna, no purge[1]	**A5E01091262**
SITRANS LR460,100 mm extension for horn antenna with purge[1]	**A5E01261979**
SITRANS LR460, 200 mm extension for horn antenna with purge[1]	**A5E01261981**
SITRANS LR460, horn 2", no purge, no emitter[1]	**A5E02083905**
SITRANS LR460, horn 3", no purge, no emitter[1]	**A5E01623511**
SITRANS LR460, horn 4", no purge, no emitter[1]	**A5E01623512**
SITRANS LR460, horn 2", with purge, no emitter[1]	**A5E02083906**
SITRANS LR460, horn 3", with purge, no emitter[1]	**A5E01623513**
SITRANS LR460, horn 4", with purge, no emitter[1]	**A5E01623514**
SITRANS LR460, 3" universal flat faced flange[1]	**A5E02303897**
SITRANS LR460, 4" universal flat faced flange[1]	**A5E01259467**
SITRANS LR460, 6" universal flat faced flange[1]	**A5E01261834**
SITRANS LR460 O-Rings for Easy Aimer[1]	**A5E01261836**
Kit, Emitter for LR460[1]	**A5E02360694**
Purge conversion kit - non-pressure-rated (no flange or extension included)	
SITRANS LR460 purge conversion, 2" horn[1]	**A5E02083914**
SITRANS LR460 purge conversion, 3" horn[1]	**A5E02083915**
SITRANS LR460 purge conversion, 4" horn[1]	**A5E02083916**

Enclosure with electronics (LR460)	Article No.
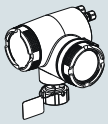	
SITRANS LR460 enclosure with board stack, HART communication, AC power, M20 cable inlet, approval option A, no process connection	**A5E02182085**
SITRANS LR460 enclosure with board stack, PROFIBUS PA communication, AC power, M20 cable inlet, approval option A, no process connection	**A5E02212422**
SITRANS LR460 enclosure with board stack, HART communication, AC power, NPT cable inlet, approval option A, no process connection	**A5E02212423**
SITRANS LR460 enclosure with board stack, PROFIBUS PA communication, AC power, NPT cable inlet, approval option A, no process connection	**A5E02212424**
SITRANS LR460 enclosure with board stack, HART communication, DC power, M20 cable inlet, approval option A, no process connection	**A5E02212425**
SITRANS LR460 enclosure with board stack, PROFIBUS PA communication, DC power, M20 cable inlet, approval option A, no process connection	**A5E02212426**
SITRANS LR460 enclosure with board stack, HART communication, DC power, NPT cable inlet, approval option A, no process connection	**A5E02212428**
SITRANS LR460 enclosure with board stack, PROFIBUS PA communication, DC power, NPT cable inlet, approval option A, no process connection	**A5E02212429**

[1] Available with no pressure rating, 0.5 bar g maximum. Customers interested in a custom designed device should consult a local sales person. For more information, please visit http://www.automation.siemens.com/aspa_app.

© Siemens 2020

Dimensional drawings

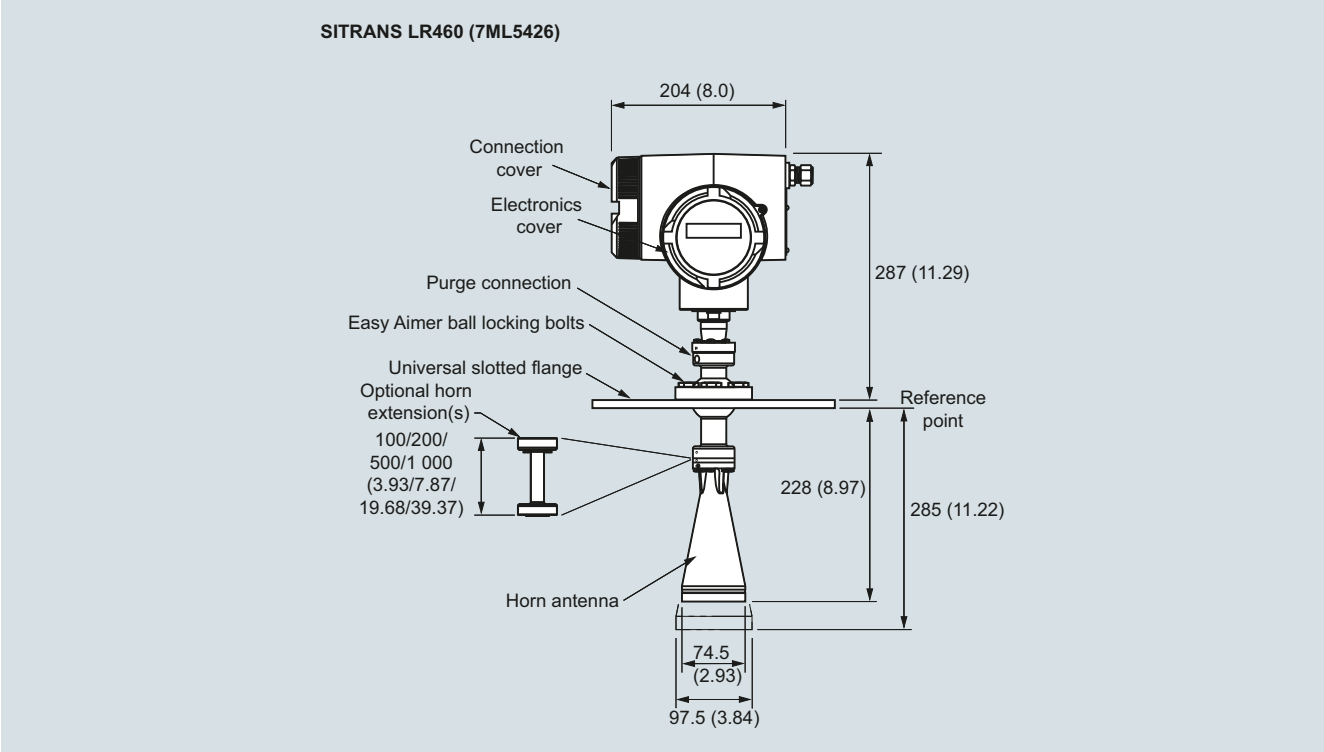

SITRANS LR460, dimensions in mm (inch)

© Siemens 2020

Circuit diagrams

AC version

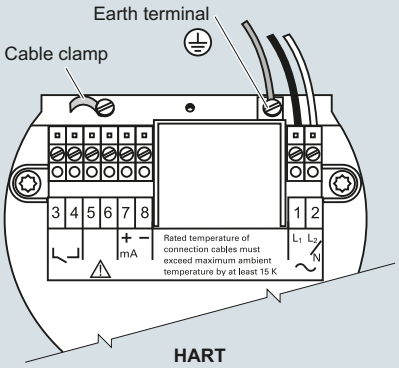

DC version

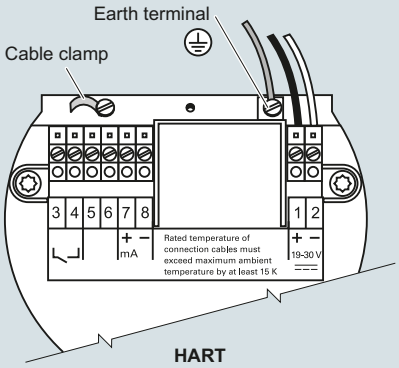

Hand programmer

SITRANS LR460
Part number:
7ML5830-2AJ

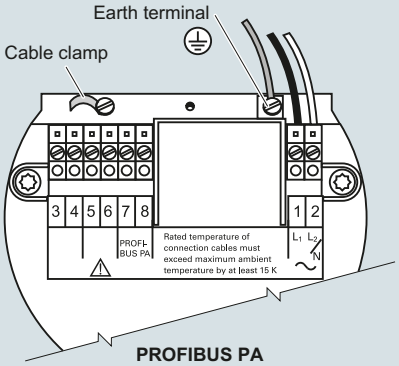

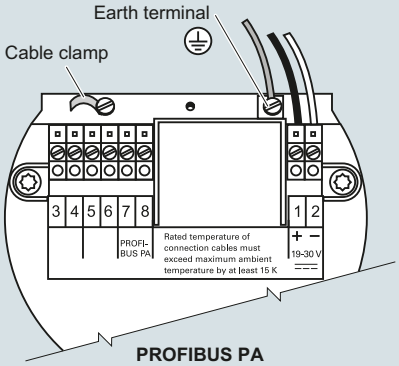

Notes

- Recommended torque on terminal clamping screws, 0.5 ... 0.6 Nm
- 4 ... 20 mA, PROFIBUS PA, DC input circuits, 14 ... 20 AWG, shielded copper wire
- AC input circuit, min. 14 AWG copper wire
- All field wiring must have insulation suitable for at least 250 V
- The equipment must be protected by a 15 A fuse or circuit breaker in the building installation

SITRANS LR460 connections

© Siemens 2020

Overview

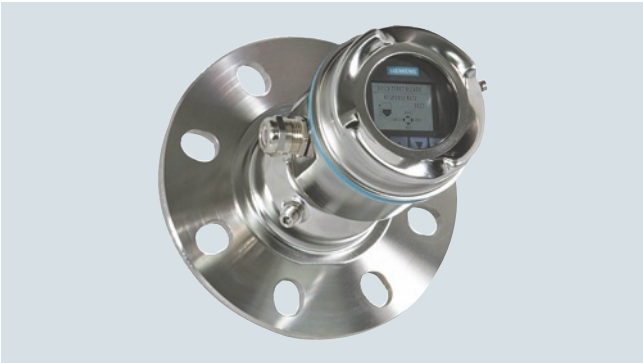

SITRANS LR560 2-wire, 78 GHz FMCW radar level transmitter for continuous monitoring of solids and liquids to a range of 100 m (328 ft).

Benefits

- Rugged stainless steel design for industrial applications
- 78 GHz high frequency provides very narrow beam, virtually no mounting nozzle noise, and optimal reflection from sloped solids
- Aimer option to direct beam to area of interest, such as draw point of cone
- Lens antenna is highly resistant to product buildup
- Air purge connection is included for self-cleaning of extremely sticky solids
- Local display interface (LDI) allows local programming and diagnostics

Application

SITRANS LR560's plug and play performance is ideal for most solids applications and long range liquid applications, including those with extreme dust and high temperatures to 200 °C (392 °F). Unique design allows safe and simple programming using the Intrinsically Safe handheld programmer without having to open the instrument's lid.
SITRANS LR560 includes an optional graphical local display interface (LDI) that improves setup and operation using an intuitive Quick Start Wizard, and echo profile display for diagnostic support. Startup is easy using the Quick Start wizard with a few parameters required for basic operation.
SITRANS LR560 measures practically any solids material to a range of 100 m (328 ft).

- Key Applications: cement powder, plastic powder/pellets, grain, coal, wood powder, fly ash

Configuration

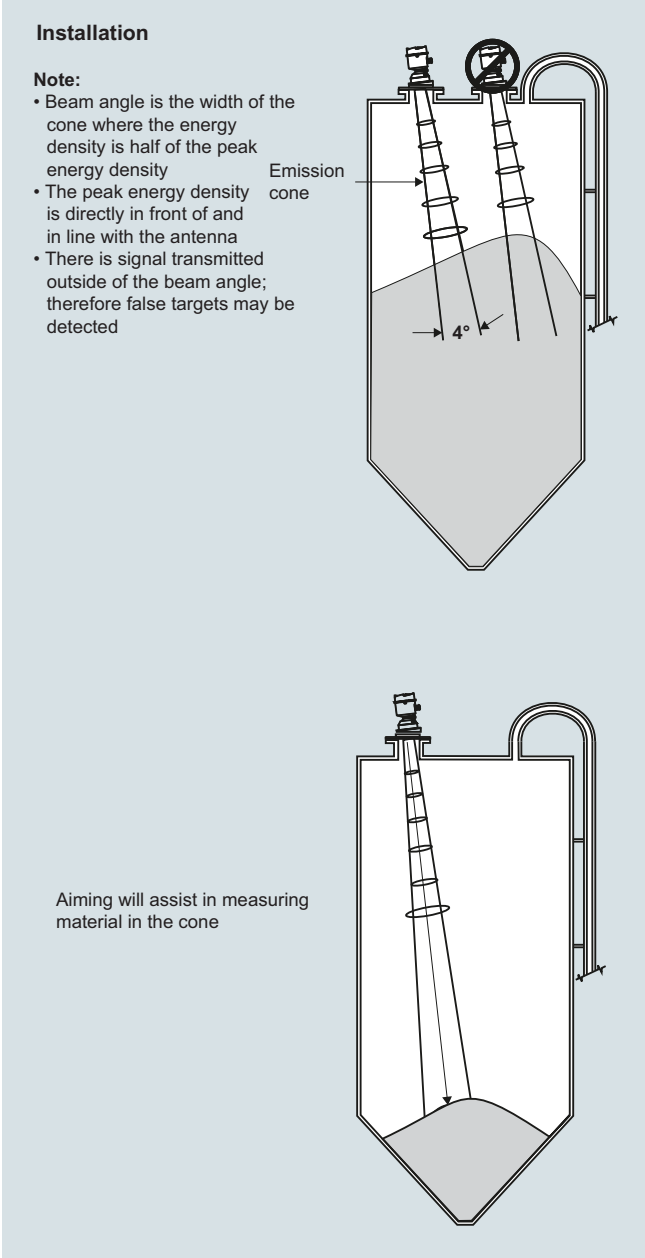

SITRANS LR560 installation, dimensions in mm (inch)

© Siemens 2020

Technical specifications

Mode of operation	
Measuring principle	Radar level measurement
Frequency	78 GHz FMCW
Minimum detectable distance	400 mm (15.75 inch) from sensor reference point
Maximum measuring range[1]	• 40 m (131 ft) version • 100 m (328 ft) version
Output	
Analog output	4 ... 20 mA
Communications	• HART • Optional: PROFIBUS PA
Fail-safe	• Programmable as high, low or hold (Loss of Echo) • NE43 programmable
Performance (according to reference conditions IEC60770-1)	
Maximum measured error (including hysteresis and non-repeatability)[2]	5 mm (0.2 inch)
Rated operating conditions (according to reference conditions IEC60770-1)	
Installation conditions	
• Location	Indoor/outdoor
Ambient conditions (enclosure)	
• Ambient temperature	-40 ... +80 °C (-40 ... +176 °F)
• Storage temperature	-40 ... +80 °C (-40 ... +176 °F)
• Installation category	I
• Pollution degree	4
Medium conditions	
Dielectric constant ε_r	> 1.6
Process temperature and pressure	See chart below
Design	
Enclosure	
• Construction	316L/1.4404 stainless steel
• Conduit entry	M20 x 1.5, or ½" NPT via adapter
• Purge inlet	1/8" NPT, 30 cfm at max. 100 psi
• Lens material	• 40 m version: PEI • 100 m version: PEEK Damage to lens could result from continuous purging/cleaning (due to abrasive solids). Recommended to purge/clean only a few seconds every hour.
• Degree of protection	Type 4X/NEMA 4X, Type 6/NEMA 6, IP68
• Weight	3.15 kg (6.94 lb) including 3 inch flange
• Optional local display interface	Graphic LCD, with bar graph representing level
Process connections	
• Universal flat-faced flanges[3]	• 3, 4, 6 inch/80, 100, 150 mm, 304 stainless steel • 3, 4, 6 inch/80, 100, 150 mm, 316L/1.4404 or 316L/1.4435 stainless steel
• Aimer flanges[3]	3, 4, 6 inch/80, 100, 150 mm, polyurethane powder-coated cast aluminum

Power supply	
4 ... 20 mA/HART	Nominal 24 V DC (max. 30 V DC) with max. 550 Ω
PROFIBUS PA	13.5 mA 9 ... 32 V DC, per IEC 61158-2
Certificates and approvals	
General	$CSA_{US/C}$, CE, FM
Radio	Europe (RED), FCC, Industry Canada, RCM
Hazardous	
• Europe/International	IECEx SIR 09.0149X ATEX II 1D, 1/2D, 2D Ex ta IIIC T139 °C Da ATEX II 3G Ex nA II T4 Gc Ex nL IIC T4 Gc
• US/Canada	FM/CSA Class II, Div. 1, Groups E, F, G Class III T4 FM/CSA Class I, Div. 2, Groups A, B, C, D, T4
• China	NEPSI Ex nA II T4 Ex nL IIC T4 DIP A20 TA, T139 °C
• Brazil	INMETRO Ex na IIC T4 Gc Ex ta IIIC T139 °C Da
Programming	
Intrinsically Safe Siemens handheld programmer	Infrared receiver
• Approvals for handheld programmer	IS model: ATEX II 1GD Ex ia IIC T4 Ga Ex iaD 20 T135 °C T_a = -20 ... +50 °C CSA/FM Class I, II, and III, Div. 1, Groups A, B, C, D, E, F, G, T6 T_a = 50 °C
Handheld communicator	HART communicator 375/475
PC	SIMATIC PDM, AMS, PACTware
Display (local)	Graphic local user interface including quick start wizard and echo profile displays

1) From sensor reference point

2) Under severe EMI/EMC environments per IEC61326-1 or NAMUR NE21, the device error may increase to a maximum of 25 mm (1 inch)

3) Universal flange mates with EN 1092-1 (PN16)/ASME B16.5 (150 lb)/JIS 2220 (10K) bolt hole pattern.

Process temperature and pressure

Version	Stainless steel -1 ... 0.5 bar -1 ... 3.0 bar	Aimer flange: -1 ... 0.5 bar	Aimer flange: -1 ... 3.0 bar
40 m	-40 ... +100 °C (-40 ... +212 °F)	-40 ... +100 °C (-40 ... +212 °F)	-40 ... +100 °C (-40 ... +212 °F)
100 m	-40 ... +200 °C (-40 ... +392 °F)	-40 ... +200 °C (-40 ... +392 °F)	-40 ... +120 °C (-40 ... +248 °F)

© Siemens 2020

Selection and ordering data

	Article No.
SITRANS LR560 Radar level transmitter with flush lens antenna ↗	**7ML5440-**
	■ ■ ■ **0 0** - ■ ■ ■ ■
Continuous, non-contact, 100 m (328 ft) range, for general solids applications.	
Order handheld programmer separately	
↗ Click on the Article No. for the online configuration in the PIA Life Cycle Portal.	
Measurement and process temperature range	
40 m (131 ft) max range, -40 ... +100 °C	**0**
100 m (328 ft) max range, -40 ... +200 °C	**1**
Process connection	
Universal flat-faced flange fits ANSI/DIN/JIS flanges	
80 mm/3 inch, 304 stainless steel	**A**
100 mm/4 inch, 304 stainless steel	**B**
150 mm/6 inch, 304 stainless steel	**C**
80 mm/3 inch, 316L stainless steel	**D**
100 mm/4 inch, 316L stainless steel	**E**
150 mm/6 inch, 316L stainless steel	**F**
80 mm/3 inch, painted aluminum, with integral aimer[1]	**G**
100 mm/4 inch, painted aluminum, with integral aimer[1]	**H**
150 mm/6 inch, painted aluminum, with integral aimer[1]	**J**
Enclosure (with cable inlet)	
Stainless steel, 1 x ½" NPT	**A**
Stainless steel, 1 x M20 x 1.5 (plastic gland included)	**B**
Pressure rating	
0.5 bar g (7.5 psi g) maximum	**0**
3 bar g (40 psi g) maximum	**1**
Output/communication	
4 ... 20 mA, HART	**A**
PROFIBUS PA	**B**
Approvals	
General Purpose, FM, $CSA_{US/C}$, Industry Canada, FCC, CE, RED, RCM	**A**
CSA/FM Class I, Div. 2, Groups A, B, C, D, Class II, Div. 1, Groups E, F, G, Class III, Industry Canada, FCC	**B**
ATEX II 3G Ex nA/nL, 1D, ½D, 2D Ex ta, INMETRO, CE, RED, RCM	**C**
Local display interface	
Without	**1**
With	**2**

[1] Rated to 120 °C max. when used with Pressure rating option 1.

	Order code
Further designs	
Please add "**-Z**" to Article No. and specify Order code(s).	
Plug M12 with mating connector[1)2)3)]	**A50**
Plug 7/8" with mating connector[1)3)4)]	**A55**
Stainless steel tag [69 x 50 mm (2.71 x 1.97 inch)]: Measuring-point number/identification (max. 27 characters); specify in plain text	**Y15**
Manufacturer's test certificate: M to DIN 55350, Part 18 and to ISO 9000	**C11**
Material inspection Certificate Type 3.1 per EN 10204[5)]	**C12**
NAMUR NE43 compliant, device preset to failsafe < 3.6 mA[6)]	**N07**
Operating Instructions	
All literature is available to download for free, in a range of languages, at	
http://www.siemens.com/processinstrumentation/documentation	

Accessories	Article No.
Hand Programmer, Intrinsically safe	**7ML1930-1BK**
Local display interface	**7ML1930-1FJ**
Sun Shield Cover, 304 stainless steel	**7ML1930-1FK**
Housing lid with window	**7ML1930-1FL**
One metallic cable gland M20 x 1.5, rated -40 ... +80 °C (-40 ... +176 °F), HART[7)]	**7ML1930-1AP**
One metallic cable gland M20 x 1.5, rated -40 ... +80 °C (-40 ... +176 °F), PROFIBUS PA[7)]	**7ML1930-1AQ**
SITRANS RD100, loop powered display - see Chapter 7	**7ML5741-.....-.**
SITRANS RD150, remote digital display for 4 ... 20 mA and HART devices - see Chapter 7	**7ML5742-.....-....**
SITRANS RD200, universal input display with Modbus conversion - see Chapter 7	**7ML5740-.....-..**
SITRANS RD300, dual line display with totalizer and linearization curve and Modbus conversion - see Chapter 7	**7ML5744-.....-..**
For applicable back up point level switch - see point level measurement section	

[1] Available with Approval option A only.
[2] Available with Enclosure option B only.
[3] Available with Output/communication options B and C only.
[4] Only available with enclosure option A (NPT thread).
[5] Available with Pressure rating option 1 only.
[6] Available with Output/communication option A only.
[7] Product shipped with plastic cable gland, rated to -20 °C. If -40 °C rating required, then metallic cable gland is recommended.

© Siemens 2020

Selection and ordering data

	Article No.
SITRANS LR560 Specials	
SITRANS LR560 Electronics Modules	
SITRANS LR560 Electronics Module, HART, 100 m range, compatible with 7ML54401XX00XAXX, no enclosure or process connection included.	**7ML18303-AC**
SITRANS LR560 Electronics Module, PROFIBUS PA, 100 m range, compatible with 7ML54401XX00XBXX, no enclosure or process connection included.	**7ML18303-AH**
SITRANS LR560 Electronics Module, HART, 40 m range, compatible with 7ML54400XX00XAXX, no enclosure or process connection included.	**7ML18303-AK**
SITRANS LR560 Electronics Module, PROFIBUS PA, 40 m range, compatible with 7ML54400XX00XBXX, no enclosure or process connection included.	**7ML18303-AL**
SITRANS LR560 Miscellaneous Spare Kits	
Kit, lid gasket, EPDM	**7ML18303-AA**
Kit, wrench for 4 inch and 6 inch Aimers	**7ML18303-AB**
Kit, O-rings for 3 inch Aimer	**7ML18303-AD**
Kit, O-rings for 4 inch Aimer	**7ML18303-AE**
Kit, O-rings for 6 inch Aimer	**7ML18303-AF**
Kit, lid screw and purge plug set with hex keys	**7ML18303-AG**
Kit, lid, no Window	**7ML18303-AP**

Customers interested in a custom designed device should consult a local sales person. For more information, please visit http://www.automation.siemens.com/aspa_app.

Options

Handheld programmer

Article number:
7ML1930-1BK

Sun shield cover
(304 stainless steel)

Article number:
7ML1930-1FK

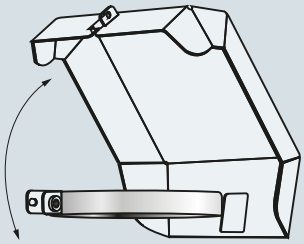

SITRANS LR560 handheld programmer and sun shield cover

© Siemens 2020

Characteristic curves

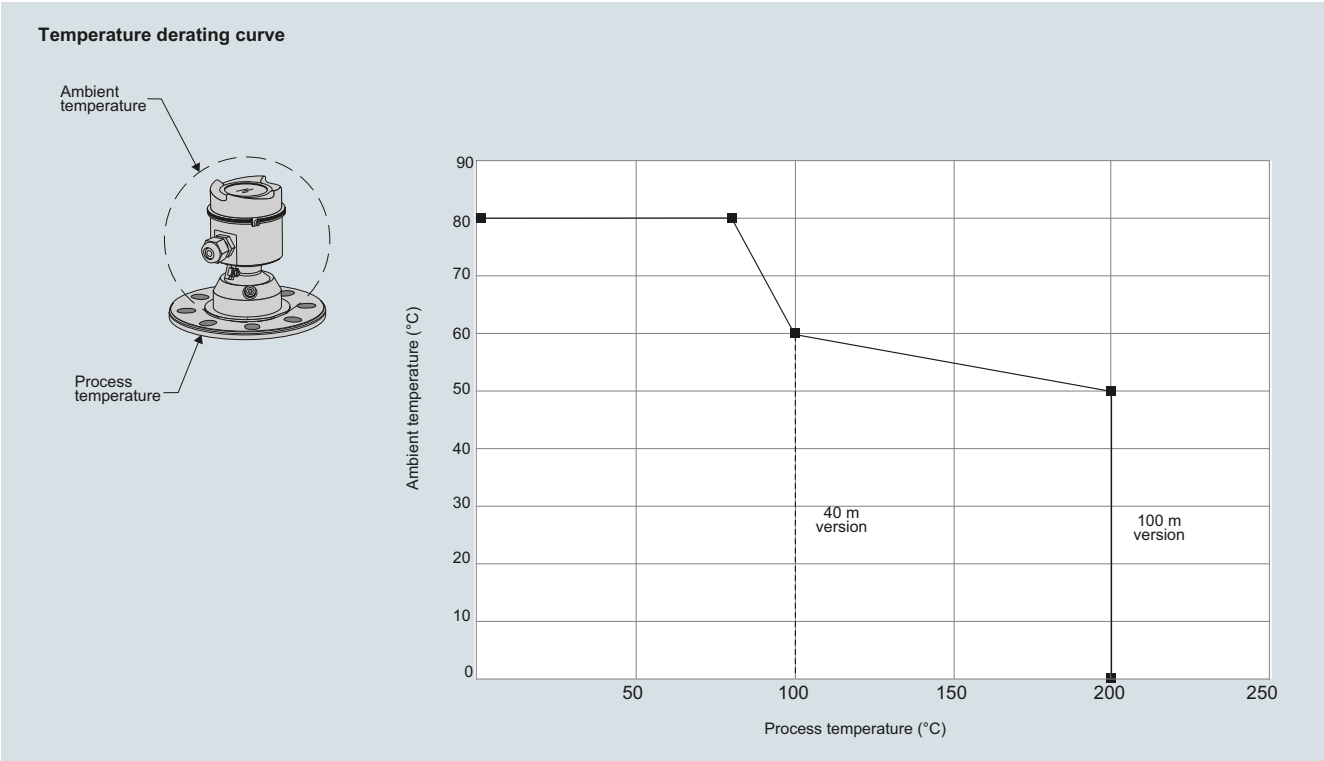

SITRANS LR560 temperature derating curve

Dimensional drawings

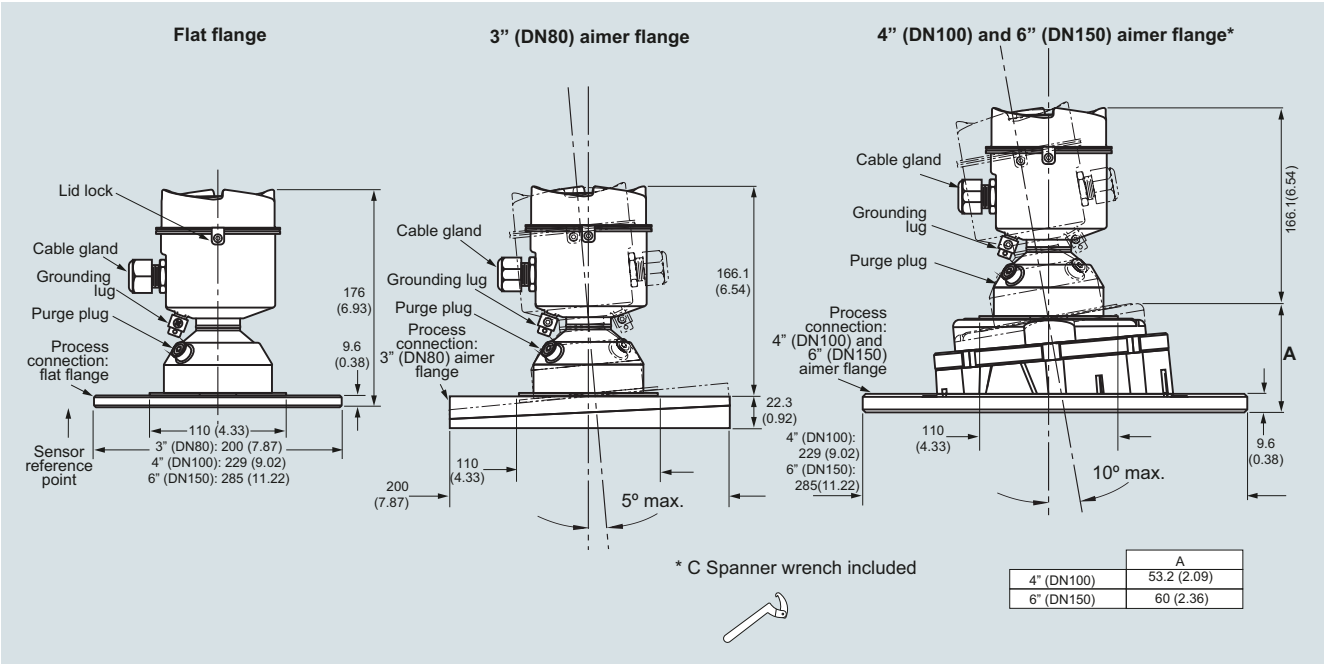

	A
4" (DN100)	53.2 (2.09)
6" (DN150)	60 (2.36)

SITRANS LR560, dimensions in mm (inch)

© Siemens 2020

Circuit diagrams

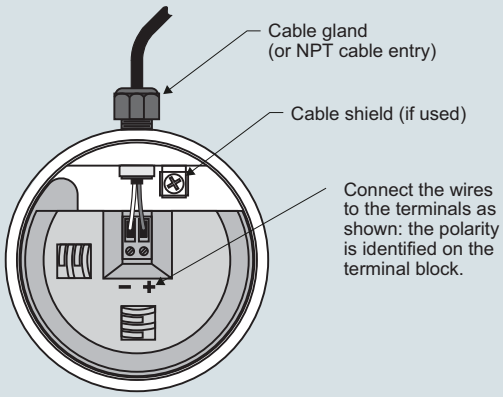

Notes:
1. Depending on the approval rating, glands and plugs may be supplied with your instrument.
2. DC terminal shall be supplied from a source providing electrical isolation between the input and output, to meet the applicable safety requirements of IEC 61010-1.
3. All field wiring must have insulation suitable for rated input voltages.
4. Use shielded twisted pair cable (14 ... 22 AWG) for HART version.
5. Separate cables and conduit may be required to conform to standard instrumentation wiring practices or electrical codes.

SITRANS LR560 connections

© Siemens 2020

Overview

Introduction

Guided Wave Radar transmitters use TDR (time domain reflectometry).

Time Domain Reflectometry (TDR)

TDR uses pulses of electromagnetic (EM) energy to measure distances or levels. When a pulse reaches a dielectric discontinuity (created by media surface), part of the energy is reflected. The greater the dielectric difference, the greater the amplitude (strength) of the reflection.

The SITRANS LG includes a transmitter and waveguide that has a characteristic impedance in air and is used as a probe. When part of the probe is immersed in a material other than air, there is lower impedance due to the increase in the dielectric. When an EM pulse is sent down the probe and meets the dielectric discontinuity, a reflection is generated.

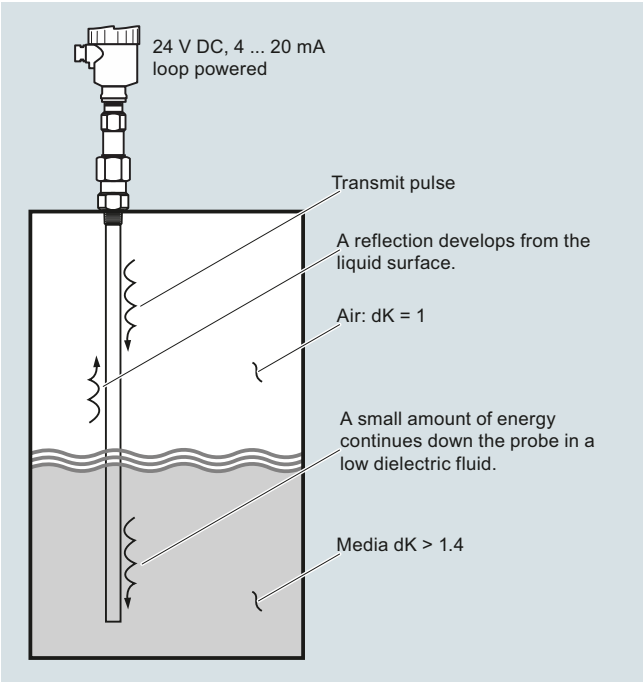

Mode of operation

Interface Detection

The SITRANS LG, is a transmitter capable of measuring both an upper level and an interface level. The upper liquid must have a dielectric constant between 1.6 and 10 and the two liquids have a difference in dielectric constants greater than 10. A typical application would be oil over water, with the upper layer of oil being non-conductive with a dielectric constant of approximately 2 and the lower layer of water being very conductive with a dielectric constant of approximately 80. This interface measurement can only be accomplished when the dielectric constant of the upper medium is lower than the dielectric constant of the lower medium.

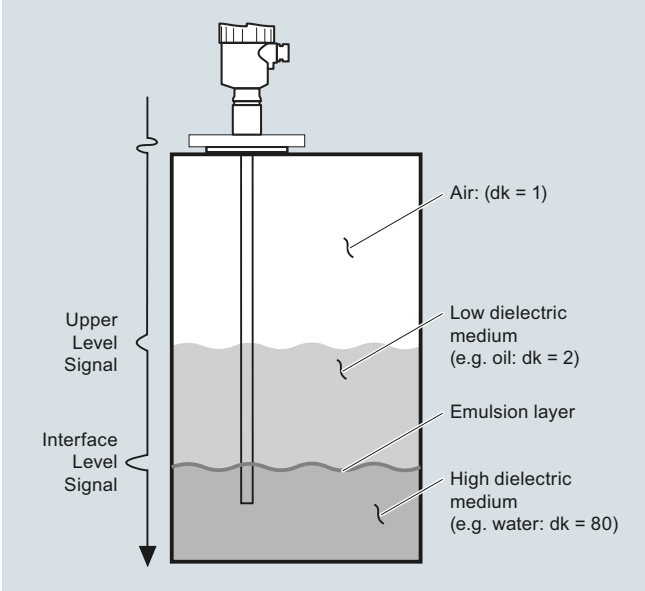

© Siemens 2020

Overview

The Siemens SITRANS LG series are guided wave radar transmitters for level, level/interface, and volume measurement of liquids and solids. The SITRANS LG product line can handle changes in process conditions, high temperatures and pressures, and steam.

Benefits

- High accuracy to +/- 2 mm
- Advanced Diagnostics available for high degree of safety
- Simple menu driven display offers ease of setup
- Large range of options offers reliability in most continuous level measurement applications
- Ease of maintenance through module design and field replaceable and adjustable probe options
- Perfect solution for wide range of applications from storage to interface with options for extreme pressure and temperature conditions
- Universally applicable in liquids, interface, slurries and solids
- Highly immune to buildup using auto learn function
- Ability to measure in loss of echo situations with probe end tracking
- Suitable for API 2350
- Convenient access using USB and remote interface accessories

Application

The SITRANS LG series comes in four different models, depending on the applications, level of performance, and functionality required:

- SITRANS LG240 offers configuration options for your hygienic and corrosive application requirements
- SITRANS LG250 Highly flexible solution for liquid level and interface applications. Extremely versatile offering solutions for storage, separation of materials or difficult ammonia applications
- SITRANS LG260 Ideal for measuring level in medium range solids applications including; grains, plastics, and cement
- SITRANS LG270 offers configuration options for extreme conditions including high temperature and high pressure applications such as: harsh applications found in chemical, HPI and energy industries for example, LPG gas tanks, steam boilers and distillation columns

Configuration

Mounting on nozzle

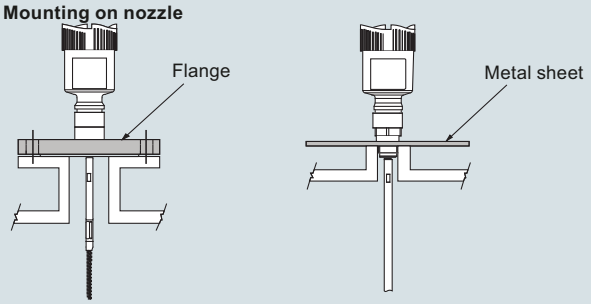

Installation in non-metal vessel

The guided microwave principle requires a metal surface on the process fitting. Therefore, use in plastic vessels etc. an instrument version with flange (from DN 50) or place a metal sheet, Ø > 200 mm (8 inch), beneath the process fitting when screwing it in.
Make sure that the plate has direct contact with the process fitting

Mounting socket

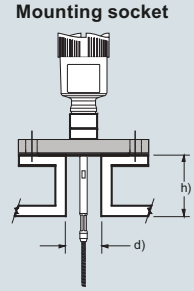

If possible, avoid sockets, mount the sensor flush with the vessel top. If this is not possible, use short sockets with small diameter. Higher sockets or sockets with a bigger diameter can generally be used. They simply increase the upper blocking distance. Check if this is relevant for your measurement. In such cases, always carry out a false signal suppression after installation.

d	h
DN 40 ... DN 150	≤ 150
> DN 150 ... DN 200	≤ 100

Socket must be installed flush

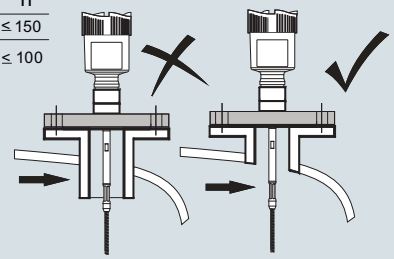

When welding the socket, make sure that the socket is flush to the vessel top.
Before beginning the welding work, remove the electronics module from the sensor. By doing this, you avoid damage to the electronics through inductive coupling.

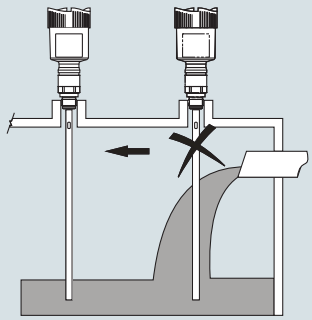

Inflowing medium

Do not mount the instruments in or above the filling stream. Make sure that you detect the product surface, not the inflowing product.

SITRANS LG Series installation

© Siemens 2020

Configuration (continued)

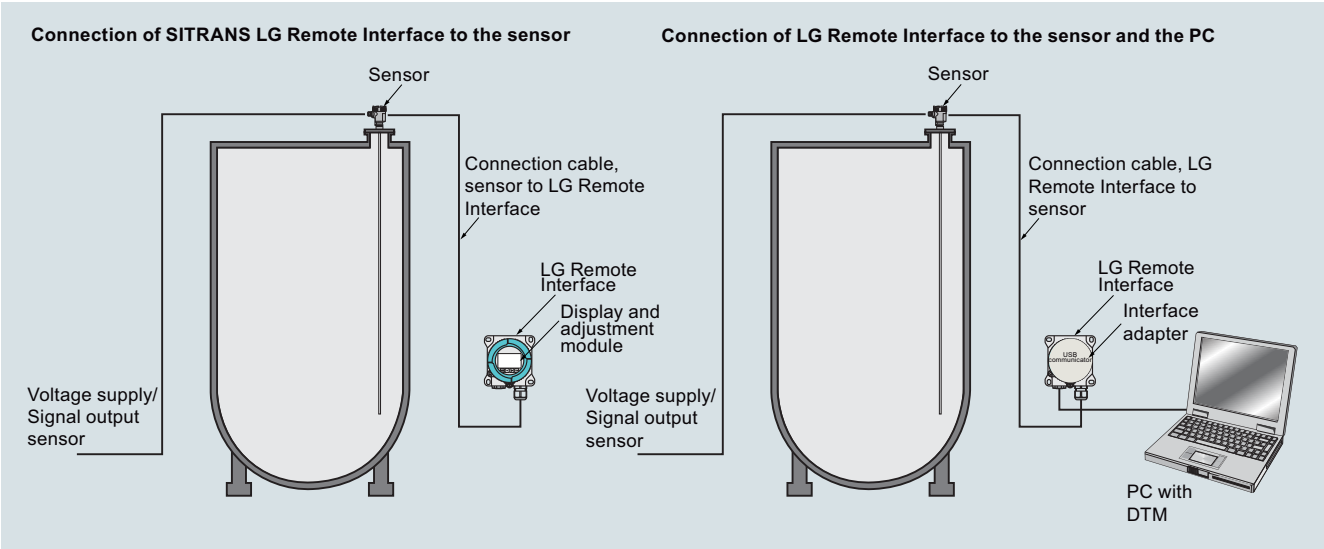

SITRANS LG Remote Interface installation

© Siemens 2020

Technical specifications

Mode of operation	
Measuring principle	Guided wave radar measurement
Measuring range	300 ... 75 000 mm (11.81 ... 2 952.75 inch)
Output	
mA analog output with HART digital signal	4 ... 20 mA/HART (SIL optional)
Output range	
• Analog	Current: minimum 3.8 mA, maximum 20.5 mA
• Startup current	≤ 10 mA for 5 ms after switching on, ≤ 3.6 mA
Diagnostic alarm	Failure signal current output (adjustable): last valid measured value, ≥ 21 mA, ≤ 3.6 mA
Digital communication	HART Version 7 x and multidrop compatible
Modbus	Modbus RTU, Modbus ASCII
PROFIBUS PA	PROFIBUS PA profile 3.02
FOUNDATION Fieldbus	FOUNDATION Fieldbus protocol Physical layer according to IEC 61158-2
Performance	Process reference conditions according to DIN EN 61298-1
• Measuring cycle time	< 500 ms
• Step response time	≤ 3 s
• Temperature Effects	The measurement error from the process conditions is in the specified pressure and temperature range of below 1 %
Non-linearity	
• Coaxial	
• Single rod probes	
• Interface models	See manual for more details
Resolution and repeatability	Accuracy +/- 2 mm (0.08 inch)
Accuracy	
• Coaxial/rod/cable probes	+/- 2 mm (0.08 inch)
• Interface models	+/- 5 mm (0.197 inch)
	Note: Typical deviation, Interface measurement. See manual for full explanation.
Rated operating conditions	
Ambient temperature for enclosure	-40 ... +80 °C (-40 ... +176 °F)
Storage temperature	-40 … +80 °C (-40 … +176 °F)
LCD readable temperature range	-40 ... +80 °C (-40 ... +176 °F) with display heated option
Location	Indoor/outdoor
Installation category	II
Pollution degree	2
Relative Humidity	20 ... 85 %
Medium conditions	
Dielectric constant	dK ≥ 1.4 (configuration dependent)
	Note: for measurement below 1.4 use probe end tracking.
Process temperature range	-196 ... +450 °C (-321 ... +842 °F)
Vessel pressure	-1 … +400 bar (-100 … +40 000 kPa)

Design	
Instrument weight (dependent on process fitting) - see manual for further details	Approx. 0.8 ... 8 kg (0.176 ... 17.64 lb)
Materials	
• Enclosure	• Plastic housing plastic PBT (Polyester) • Aluminum die-cast housing, aluminum die-cast AlSi10 mg, powder-coated- basis: polyester • Stainless steel housing, precision casting 316L • Stainless steel housing, electropolished 316L
• Degree of protection	• Type 4/NEMA 4, IP65 • Plastic housing IP66/IP67 • Aluminum and stainless steel housings are IP66/68
• Cable inlet	2 x M20 x 1.5 or 2 x ½" NPT
Process connections	
• Pipe thread, cylindrical (ISO 228 T1)	G¾" A, G1" A, G1½" A according to DIN 3852-A
• American pipe thread, conical (ASME B1.20.1)	¾" NPT, 1" NPT, 1½" NPT
• Flanged	DIN from DN 25, ASME from 1"
• Hygienic	Hygienic fittings
Process seal instrument side	FKM (SHS FPM 70C3 GLT), FFKM (Kalrez 6375), EPDM (A+P 70.10-02), silicone FEP coated (A+P FEPO-SEAL) or Borosilicate glass GPC 540
Second line of defense (glass seal) (optional)	Borosilicate glass GPC 540 Note: The second line of defense is a second level of the process separation in the form of a gas-tight feedthrough in the lower part of the housing, preventing product from penetrating into the housing.
Programming	
Local	Four button, menu-driven data entry
Handheld communicator	Hart communicator
PC	SIMATIC PDM, AMS, PACTware
Power	
2-wire Hart version	9.6 ... 35 V DC
4-wire versions	9.6 … 48 V DC, 20 … 42 V AC, 50/60 Hz, and 90 … 253 V AC, 50/60 Hz
Modbus	8 … 30 V DC
PROFIBUS PA	9 ... 32 V DC
FOUNDATION Fieldbus	9 ... 32 V DC
	Note: see manual for specific power based on ordered options
Certificates and approvals	
Hazardous approvals:	ATEX, FM, CSA, IECex Note: other regional approvals are available
Hygienic approvals:	EHEDG, FDA
Overfill protection	WHG, Vlarem
Ship approval	ABS, CCS, GL, BV, LR

© Siemens 2020

Technical specifications (continued)

	SITRANS LG240	**SITRANS LG250**	**SITRANS LG260**	**SITRANS LG270**
Industries	**Food, Beverage and Pharmaceutical**	**Chemical/HPI/Power/General**	**Cement, power generation, food, processing, mineral processing, mining**	**Chemical/HPI/Power/General**
Applications	Hygienic and corrosive applications	Liquids, storage and process vessels with agitators, vaporous liquids, interface	Cement, fly ash, grain, coal, flour, plastics	Aggressive applications in liquids, storage and process vessels with agitators, vaporous liquids, high temperatures and pressures, low dielectric media
Range	32 m	75 m	60 m	60 m
Performance	± 2 mm	± 2 mm	± 2 mm	± 2 mm
Temperature	-40 … +150 °C (-40 ... +302 °F)	-40 … +200 °C (-40 ... +392 °F)	-40 … +200 °C (-40 ... +392 °F)	-196 … +450 °C (-320.8 ... +842 °F)
Process pressure				
Standard version	-	-1 … +40 bar/ -100 … +4 000 kPa (-14.5 … +580 psig), depending on the process fitting	-	-
With borosilicate glass lead-through	-	-1 … +100 bar/ -100 … +10 000 kPa (-14.5 … +1 450 psig), depending on the process fitting	-	-
Communications	• 4 ... 20 mA/HART • Modbus: Modbus RTU, Modbus ASCII • PROFIBUS PA • FOUNDATION Fieldbus • SIMATIC PDM • DTM/FDT for PACTware • Fieldcare	• 4 ... 20 mA/HART • Modbus: Modbus RTU, Modbus ASCII • PROFIBUS PA • FOUNDATION Fieldbus • SIMATIC PDM • DTM/FDT for PACTware • Fieldcare	• 4 ... 20 mA/HART • Modbus: Modbus RTU, Modbus ASCII • PROFIBUS PA • FOUNDATION Fieldbus • SIMATIC PDM • DTM/FDT for PACTware • Fieldcare	• 4 ... 20 mA/HART • Modbus: Modbus RTU, Modbus ASCII • PROFIBUS PA • FOUNDATION Fieldbus • SIMATIC PDM • DTM/FDT for PACTware • Fieldcare

© Siemens 2020

Selection and ordering data

SITRANS LG240 Guided radar level transmitter ↗	**Article No. 7ML5880-**	Ord. code
Continuous, contact, 32 m (105 ft) range. Monitors level and interface in aggressive liquids. Ideal for hygienic applications.	■■■■■ - ■■■■	■■■
↗ Click on the Article No. for the online configuration in the PIA Life Cycle Portal.		
Approvals		
General purpose (CSA, FM, CE)	0 A	
Overfill protection (WHG; VLAREM)[11]	0 C	
ATEX II 1G, ½G, 2G Ex ia IIC T6[14]	0 E	
ATEX II 1G, ½G, 2G Ex ia IIC + Overfill (WHG; VLAREM)[11]	0 F	
ATEX II 1G, ½G 2G Ex ia IIC + ATEX II 1D, ½D, 2D IP6x[1)15)17)]	0 H	
ATEX II ½G, 2G Ex d ia IIC T6[3)13)16)]	0 J	
ATEX II ½G, 2G Ex d ia IIC + ATEX II ½D, 2D IP6x[3)13)16)17)]	0 K	
ATEX II 1D, ½D, 2D IP6x[1)17)18)]	0 N	
ATEX II 1G, II ½G, II 2G Ex ia IIC T6 ... T1 Ga, Ga/Gb, Gb /IEC Ex ia IIC T6 ... T1 Ga, Ga/Gb, Gb[1)14)]	0 W	
IEC Ex ia IIC T6[14]	0 P	
IEC Ex ia IIC T6 + IEC IP6x T tD[1)15)17)]	0 Q	
IEC Ex d ia IIC T6[3)13)16)]	0 R	
IEC Ex d ia IIC T6 + IEC IP6x T tD[3)13)16)]	0 S	
FM (NI) Class I, Div. 2, Groups A, B, C, D2[9)12)16)]	1 A	
FM (IS) Class I, II, III, Div. 1, Groups A, B, C, D, E, F, G[9)15)]	1 B	
FM (XP-AIS) Class I, II, III, Div. 1, Groups A, B, C, D, E, F, G[3)13)16)]	1 C	
CSA (NI) Class I, Div. 2, Groups A, B, C, D; (DIP) Class II, III, Div. 1, Groups E, F, G[1)17)]	1 E	
CSA (IS) Class I, II, III, Div. 1, Groups A, B, C, D, E, F, G[14]	1 F	
CSA (XP-IS) Class I, II, III, Div. 1, Groups A, B, C, D, E, F, G[3)13)16)]	1 G	
NEPSI Ex ia IIC T6[14]	2 A	
NEPSI Ex ia IIC T6 + DIP A20/21 TA T*[1)15)]	2 B	
NEPSI Ex d ia IIC T6[9)10)13)16)]	2 C	
NEPSI Ex d ia IIC T6 + DIP A20/21 TA T*[9)10)13)16)]	2 D	
NEPSI DIP A20/21 TA T*[1)16)]	2 G	
INMETRO Ex ia IIC T6 ... T1[14]	3 A	
INMETRO Ex t IIIC T* IP6X, Da, Da/Db, Da/Dc, Db + Ex ia IIC T6, Ga, Ga/Gb[1)10)15)]	3 B	
INMETRO Ex d ia IIC T6 ... T1[9)10)13)16)]	3 C	
INMETRO Ex t IIIC T* IP6X, Da, Da/Db, Da/Dc, Db + Ex d ia IIC T6 Ga/Gb[9)10)13)16)]	3 D	
INMETRO Ex t IIIC T* IP6X, Da, Da/Db, Da/Dc, Db[1)10)13)16)]	3 G	
Korea KC ex free area	6 A	
GOST-R/EAC 0 Ex ia IIC T1 ... T6 X[14]	5 A	
GOST-R/EAC 0 Ex ia IIC T1 ... T6 X + Ex t IIIC T ... IP66[1)15)]	5 B	
GOST-R/EAC 1 Ex d ia IIC T1 ... T6 X[9)10)13)16)]	5 C	
GOST-R/EAC 1 Ex d ia IIC T1 ... T6 X + Ex t IIIC T ... IP66[9)10)13)16)]	5 D	
Note: Version/Material, Process fitting/ Material, and Length options are available only with options of corresponding type.		
Probe version/Material		
Probe cable ø 4 mm (0.16 inch) with gravity weight/PFA[17]	A	
Probe exchangeable rod ø 8 mm (0.31 inch)/1.4435 (Basle standard)[17]	B	
Probe exchangeable rod ø 8 mm (0.31 inch)/ 1.4435 (Basle standard) can be autoclaved[17]	C	
Probe rod ø 10 mm (0.39 inch)/PFA[17]	D	
Probe exchangeable rod (ø 8 mm) /1.4435 (BN2), electropolished (Ra < 0.38 µm)[17]	E	

SITRANS LG240 Guided radar level transmitter	**Article No. 7ML5880-**	Ord. code
Continuous, contact, 32 m (105 ft) range. Monitors level and interface in aggressive liquids. Ideal for hygienic applications.	■■■■■ - ■■■■	■■■
Process fitting/Material		
Clamp 2" PN 16 (ø 64 mm) DIN 32676, ISO2852/1.4435 (BN2)	0 0	
Clamp 2" PN 16 (ø 64 mm) DIN 32676, ISO2852/PTFE-TFM 1600	0 1	
Clamp 2 1/2" PN 10 (ø 77.5 mm) DIN 32676, ISO2852/1.4435 (BN2)	0 2	
Clamp 2 1/2" PN 10 (ø 77.5 mm) DIN 32676, ISO2852/PTFE-TFM 1600	0 3	
Clamp 3" PN 10 (ø 91 mm) D N 32676, ISO2852/1.4435 (BN2)	0 4	
Clamp 3" PN 10 (ø 91 mm) DIN 32676, ISO2852/PTFE-TFM 1600	0 5	
Clamp 4" PN 6 (ø 119 mm) DIN 32676, ISO2852/1.4435(BN2)	0 6	
Clamp 4" PN 6 (ø 119 mm) DIN 32676, ISO2852/PTFE-TFM 1600	0 7	
Clamp 1½" PN 16 (ø 50.5 mm) DIN 32676, ISO2852/1.4435 (BN2)	4 0	
Bolting DN 32, PN 40 DIN 11851/1.4435(BN2)	0 8	
Bolting DN 32, PN 40 DIN 11851/PTFE-TFM 1600	1 0	
Bolting DN 40, PN 40 DIN 11851/1.4435 (BN2)	1 1	
Bolting DN 40, PN 40 DIN 11851/PTFE-TFM 1600	1 2	
Bolting DN 50, PN 25 DIN 11851/1.4435(BN2)	1 3	
Bolting DN 50, PN 25 DIN 11851/PTFE-TFM 1600	1 4	
Bolting DN 65, PN 25 DIN 11851/PTFE-TFM 1600	1 5	
Flange DN 25, PN 40 Form C, DIN 2501/PTFE-TFM 1600	2 0	
Flange DN 40, PN 40 Form C, DIN 2501/PTFE-TFM 1600	2 1	
Flange DN 50, PN 40 Form C, DIN 2501/PTFE-TFM 1600	2 2	
Flange DN 50, PN 40 Form V13, DIN 2513/PTFE-TFM 1600	2 3	
Flange DN 65, PN 40 Form C, DIN 2513/PTFE-TFM 1600	2 4	
Flange DN 80, PN 40 Form C, DIN 2501/PTFE-TFM 1600	2 5	
Flange DN 100, PN 16 Form C, DIN 2501/PTFE-TFM 1600	2 6	
Flange DN 80, PN 40 EN 1092-1 Form B1/PTFE-TFM 1600	2 7	
Flange DN 100, PN 40 EN 1092-1 Form B1/PTFE-TFM 1600	2 8	
Flange 2" 150 lb RF, ASME B16.5/PTFE-TFM 1600	3 0	
Flange 2" 300 lb RF, ASME B16.5/PTFE-TFM 1600	3 1	
Flange 3" 150 lb RF, ASME B16.5/PTFE-TFM 1600	3 2	
Flange 4" 150 lb RF, ASME B16.5/PTFE-TFM 1600	3 3	
Note: The pressure limit for all PTFE coated versions is 16 bar (per manual).		

© Siemens 2020

Selection and ordering data

SITRANS LG240 Guided radar level transmitter	**Article No. 7ML5880-**												Ord. code
Continuous, contact, 32 m (105 ft) range. Monitors level and interface in aggressive liquids. Ideal for hygienic applications.	■	■	■	■	■	-	■	■	■	■		■	■	■
Electronics														
Two-wire 4 ... 20 mA/HART						0								
Four-wire Modbus[3)13)]						1								
Two-wire 4 ... 20 mA/HART with SIL qualification[9)]						2								
Four-wire 4 ... 20 mA/HART; 90 ... 253 V AC; 50/60 Hz[3)13)]						3								
Four-wire 4 ... 20 mA/HART; 9.6 ... 48 V DC; 20 ... 42 V AC[3)13)]						4								
PROFIBUS PA[9)]						5								
FOUNDATION Fieldbus[9)]						6								
Seal/Process temperature														
Without glass seal/-40 ... +150 °C (-40 ... +302 °F)[2)]								A						
FFKM (Kalrez 6221)/-20 ... 150 °C (-4 ... +302 °F)[4)]								B						
EPDM (Freudenberg 70 EPDM 291)/ -20 ... 130 °C (-4 ... +266 °F)[4)]								C						
Housing/Protection/Cable														
Note: for installation of remote display, 7ML5840, with LG two chamber housing options, contact PVC														
Plastic IP66/IP67 M20 x 1.5/blind stopper									A					
Plastic IP66/IP67 1/2" NPT/blind stopper									B					
Aluminum/IP66/IP68 (0.2 bar) M20 x 1.5/blind stopper									C					
Aluminum/IP66/IP68 (0.2 bar) 1/2" NPT/ blind stopper									D					
Aluminum double chamber/IP66/IP68 (0.2 bar) M20 x 1.5/blind stopper									E					
Aluminum double chamber/IP66/IP68 (0.2 bar) 1/2" NPT/blind stopper									F					
Stainless steel (precision casting) 316L/IP66/IP68 (0.2 bar) M20 x 1.5/ blind stopper									G					
Stainless steel (precision casting) 316L/IP66/IP68 (0.2 bar) 1/2" NPT/ blind stopper									H					
Stainless steel (electropolished) 316L/IP66/IP68 (0.2 bar) M20 x 1.5/ blind stopper									J					
Stainless steel (electropolished) 316L/IP66/IP68 (0.2 bar) 1/2" NPT/ blind stopper									K					
Stainless steel double chamber/IP66/IP68 (0.2 bar) M20 x 1.5/blind stopper									L					
Stainless steel double chamber/IP66/IP68 (0.2 bar) 1/2" NPT/blind stopper									M					
Aluminum/IP66/IP68 (0.2 bar) M20 x 1.5/cable gland stainless steel									N					
Aluminum double chamber/IP66/IP68 (0.2 bar) M20 x 1.5/cable gland stainless steel									P					
Stainless steel (precision casting) 316L/IP66/IP68 (0.2 bar) M20 x 1.5/ cable gland stainless steel									Q					
Stainless steel (electropolished) 316L/IP66/IP68 (0.2 bar) M20 x 1.5/ cable gland stainless steel									R					
Aluminum single chamber / IP66/IP68 (0.2 bar) M20 x 1.5/cable gland brass nickel-plated									W					
Aluminum double chamber / IP66/IP68 (0.2 bar) M20 x 1.5/cable gland brass nickel-plated									X					

SITRANS LG240 Guided radar level transmitter	**Article No. 7ML5880-**												Ord. code
Continuous, contact, 32 m (105 ft) range. Monitors level and interface in aggressive liquids. Ideal for hygienic applications.	■	■	■	■	■	-	■	■	■	■		■	■	■
Stainless steel single chamber (precision casting) / IP66/IP68 (0.2 bar) M20 x 1.5/ cable gland brass nickel-plated								Y						
Stainless steel double chamber / IP66/IP68 (0.2 bar) M20 x 1.5/cable gland brass nickel-plated								S						
Remote stainless steel single chamber housing, electropolished/IP66/IP67 with cable outlet IP68 (electronics separated by cable);M20 x 1.5/blind plug[10)]								Z			Q	2	A	
Remote plastic single chamber housing /IP66/IP67 with cable outlet IP68 (electronics separated by cable); M20 x 1.5/blind plug[10)]								Z			Q	2	B	
Lengths														
Rod ø 8 mm (0.31 inch)/1.4435 (Basle standard 300 ... 4 000 mm)														
300 ... 1 000 mm (11.81 ... 39.37 inch)[6)]									0					
1 001 ... 2 000 mm (39.41 ... 78.74 inch)[6)]									1					
2 001 ... 3 000 mm (78.78 ... 118.11 inch)[6)]									2					
3 001 ... 4 000 mm (118.15 ... 157.48 inch)[6)]									3					
Rod ø 10 mm (0.24 inch)/PFA (300 ... 4 000 mm)														
300 mm (11.81 inch)[6)]									9		R	1	A	
500 mm (19.69 inch)[6)]									9		R	1	B	
300 ... 1 000 mm (11.81 ... 39.37 inch)[6)]									9		R	1	C	
1 001 ... 5 000 mm (39.41 ... 78.74 inch)[6)]									9		R	1	D	
2 001 ... 3 000 mm (78.78 ... 118.11 inch)[6)]									9		R	1	E	
3 001 ... 4 000 mm (118.15 ... 157.48 inch)[6)]									9		R	1	F	
Cable ø 4 mm (0.16 inch)/PFA (500 ... 32 000 mm)														
500 mm (9.69 inch)									9		R	1	G	
501 ... 1 000 mm (19.72 ... 39.37 inch)									9		R	1	H	
1 001 ... 2 000 mm (39.41 ... 78.74 inch)									9		R	1	J	
2 001 ... 4 000 mm (78.78 ... 157.40 inch)									9		R	1	K	
4 001 ... 5 000 mm (157.52 ... 196.85 inch)									9		R	1	L	
5 001 ... 10 000 mm (196.89 ... 393.70 inch)									9		R	1	M	
10 001 ... 15 000 mm (393.74 ... 590.55 inch)									9		R	1	N	
15 001 ... 20 000 mm (590.59 ... 787.40 inch)									9		R	1	P	
20 001 ... 25 000 mm (787.44 ... 984.25 inch)									9		R	1	Q	
25 001 ... 32 000 mm (984.29 ... 1 259.52 inch)									9		R	1	R	
Exchange. rod ø 8 mm (0.31 inch)/1.4435 (BN2), electropolished (Ra < 0.38 µm)														
300 ... 1 000 mm (11.81 ... 39.37 inch)[6)]									9		R	2	A	
1 001 ... 2 000 mm (39.41 ... 78.74 inch)[6)]									9		R	2	B	
2 001 ... 3 000 mm (78.78 ... 118.11 inch)[6)]									9		R	2	C	
3 001 ... 4 000 mm (118.15 ... 157.48 inch)[6)]									9		R	2	D	

© Siemens 2020

Selection and ordering data

	Order code
Further designs (mandatory)	
Please add "**-Z**" to Article No. and specify Order code(s).	
Supplementary electronics	
Without	**A00**
Additional current output 4 ... 20 mA[10]	**A01**
Indicating/adjustment module	
Without	**E00**
Mounted	**E01**
Laterally mounted	**E02**
Language of display	
German	**L00**
English	**L01**
French	**L02**
Dutch	**L03**
Italian	**L04**
Spanish	**L05**
Portuguese	**L06**
Russian	**L07**
Chinese	**L08**
Japanese	**L09**
Operating instructions	
German	**M00**
English	**M01**
French	**M02**
Spanish	**M03**
Further designs (optional)	
Please add "**-Z**" to Article No. and specify Order code(s).	
Enter the total insertion length in plain text description	**Y01**
Enter the total length of rigid part (cable version only) range from 100 ... 1 000 mm	**Y02**
Cleaning included certificate: oil, grease and silicone free	**W01**
Remote electronic cable lengths: 2 m (6.6 ft). Only available with Housing options Q2A and Q2B	**Y10**
Remote electronic cable lengths: 5 m (16.4 ft). Only available with Housing options Q2A and Q2B	**Y11**
Remote electronic cable lengths: 10 m (32.8 ft). Only available with Housing options Q2A and Q2B	**Y12**
Identification label (measurement loop) stainless steel, 40 characters max, add in plain text. To add more than one line use a coma "," for line break.	**Y17**
Identification Label (measurement loop) foil, 40 characters max, add in plain text. To add more than one line use a coma "," for line break.	**Y18**
Material Inspection certificate 3.1 of EN 10204	**C05**
3.1-Inspection Certificate for instrument (EN 10204)[8]	**C12**
Inspection certificate 3.1 (EN 10204, NACE MR 0175) - material[8][19] Note: 316L probes include NACE MR 0175 and MR 0103, non 316L probes include MR 0175 only and plated flange designs are not available with NACE certificate.	**D07**
3.1-Inspection Certificate for instrument with test data (EN 10204)[8]	**C25**
2.2-Factory certificate for material (EN 10204)[8]	**C15**
Quality and test plan[8]	**C26**
Dye penetration test, results confirmed via a 3.1 certificate/instrument (EN10204)[8]	**C13**

	Order code
Further designs (optional)	
Please add "**-Z**" to Article No. and specify Order code(s).	
X-ray test + 3.1 certificate/instrument[8]	**C14**
Positive material identification test + 3.1 certificate/instrument[8]	**C16**
Roughness test + 3.1 certificate/instrument[8]	**C18**
Pressure test + 3.1 certificate/instrument[8]	**C31**
Helium leak test + 3.1 certificate/instrument[8]	**C32**
Ferrite measuring accuracy to DIN 32514-1 + 3.1 certificate/instrument[8]	**C60**
Pressure test according to Norsok + 3.1 certificate/instrument[8]	**C61**
5 point calibration certificate (min. length 300 mm)[8]	**C62**
Operating Instructions	
All literature is available to download for free, in a range of languages, at	
http://www.siemens.com/processinstrumentation/documentation	
Accessories	Article No.
SITRANS LG, GWR sensor Display Module	**A5E34143449**
SITRANS LG, two-wire 4 ... 20 mA/HART electronic	**A5E35637821**
SITRANS LG, USB communicator	**A5E35192015**
SITRANS LG, Mounting eye M12 x 20	**PBD:51041448**
SITRANS LG, Mounting spring	**PBD:51041449**
Siemens Intrinsically Safe Barrier (DC powered), ATEX II 1 G EEx ia	**7NG4124-0AA00**
SITRANS RD100, loop powered display - see Chapter 7	**7ML5741-.....-.**
SITRANS RD150, remote digital display for 4 ... 20 mA and HART devices - see Chapter 7	**7ML5742-.....-....**
SITRANS RD200, universal input display with Modbus conversion - see Chapter 7	**7ML5740-.....-..**
SITRANS RD300, dual line display with totalizer and linearization curve and Modbus conversion - see Chapter 7	**7ML5744-.....-..**
For applicable back up point level switch - see point level measurement section	

Note: some configuration options are not available.
For restriction information see the online PIA configuration tool.

1) Some approvals are not available with Plastic and Stainless steel (electropolished) Housing/Protection/Cable options and certain glands.
2) Available only with Rod ø 10 mm/PFA and Cable ø 4 mm/PFA Length options.
3) Available only with Supplementary electronic option A00 and Indicating/adjustment module options E00, E01.
4) Not available with Remote Housing/Protection/Cable options Q2A and Q2B.
5) Not available with Electronic option 5.
6) Not available with Y02.
7) Available only with Electronic options 0, 2, and 6.
8) Listed Certificates are not available with all configurations, please contact factory for more information.
9) Available only with Supplementary electronic option A00.
10) Not available with Indicating/adjustment module option E02.
11) Available only with Electronics options 0, 2, and 5.
12) Some approvals are not available with Remote or Stainless steel (electropolished) Housing/Protection/Cable options and certain glands.
13) Available only with Double chamber, Metallic Housing/Protection/Cable options and certain glands.
14) Available only with Electronics options 0, 2, 5, 6.
15) Available only with Electronics options 0 and 2.
16) Available only with Electronics options 0 ... 4.
17) Not available with some Seal/Process Temperature options.
18) Available only with Electronic options 0, 2, 3, and 4.
19) Available only with 316L Probes. NACE is not available with coated, plated, or hygienic connections.

Note: Please consult manual for further detail.

© Siemens 2020

Selection and ordering data

	Article No.	
SITRANS LG250 Guided radar level transmitter ↗	**7ML5881-**	Ord. code
Continuous, contact, 75 m (246 ft) range. Monitors level and interface in liquids.	■ ■ ■ ■ ■ - ■ ■ ■ ■	■ ■ ■
↗ Click on the Article No. for the online configuration in the PIA Life Cycle Portal.		
Approvals		
General purpose (CSA, FM, CE)	0 A	
Shipping approval[4)6)7)8)13)]	0 B	
Overfill protection (WHG; VLAREM)[9)10)13)]	0 C	
ATEX II 1G, ½G, 2G Ex ia IIC T6[10)13)]	0 E	
ATEX II 1G, ½G, 2G Ex ia IIC + Overfill (WHG; VLAREM)[10)13)]	0 F	
ATEX II 1G, ½G, 2G Ex ia IIC T6 + shipping approval[4)6)7)8)13)]	0 G	
ATEX II 1G, ½G 2G Ex ia IIC + ATEX II 1D, ½D,2D IP6x[1)13)]	0 H	
ATEX II ½G, 2G Ex d ia IIC T6[2)8)11)12)13)]	0 J	
ATEX II 1/2G, 2G Ex d ia IIC + ATEX II 1/2D, 2D IP6x[2)8)11)12)13)]	0 K	
ATEX II 1/2G, 2G Ex d IIC T6[1)11)14)]	0 L	
ATEX II 1/2G, 2G Ex d IIC + ATEX II 1/2D, 2D IP6x[1)11)13)14)]	0 M	
ATEX II 1D, 1/2D, 2D IP6x T[1)13)14)]	0 N	
ATEX II 1G, II 1/2G, II 2G Ex ia IIC T6...T1 Ga, Ga/Gb, Gb /IEC Ex ia IIC T6...T1 Ga, Ga/Gb, Gb[13)]	0 W	
ATEX II 1/2G, II 2G Ex db IIC T6 ... T1 Ga/Gb, Gb / IEC Ex db IIC T6 ... T1 Ga/Gb, Gb[13)14)18)]	1 K	
ATEX II 1/2G, II 2G Ex d ia IIC T6 ... T1 Ga/Gb, Gb + Ship approval[2)6)8)11)12)13)]	7 A	
ATEX II 1/2G, II 2G Ex db IIC T6 ... T1 Ga/Gb, Gb + Ship approval[1)6)8)11)13)]	7 B	
ATEX II 1/2G, II 2G Ex db IIC T6 ... T1 Ga/Gb, Gb + Overfill protection (WHG, VLAREM)[1)11)14)]	7 P	
IEC Ex ia IIC T6[10)13)]	0 P	
IEC Ex ia IIC T6 + IEC IP6x T tD[1)14)15)]	0 Q	
IEC Ex d ia IIC T6[2)8)11)12)13)]	0 R	
IEC Ex d ia IIC T6 + IEC IP6x T tD[2)8)11)12)13)15)]	0 S	
IEC Ex d IIC T6[1)11)14)]	0 T	
IEC Ex d IIC T6 + IEC IP6x T tD[1)11)14)]	0 U	
IEC Ex db IIC T6...T1 Ga/Gb, Gb + Ship approval[1)6)8)11)13)14)]	7 C	
IEC Ex ia IIC T6...T1 Ga, Ga/Gb, Gb + Ship approval[6)8)13)16)]	7 D	
IEC Ex d ia IIC T6...T1 Ga/Gb, Gb + Ship approval[2)6)8)11)13)15)]	7 E	
FM (NI) Class I, Div. 2, Groups A, B, C, D[3)8)13)17)]	1 A	
FM (IS) Class I, II, III, Div. 1, Groups A, B, C, D, E, F[5)8)13)]	1 B	
FM (XP-AIS) Class I, II, III, Div. 1, Groups A, B, C, D, E, F, G[2)8)11)12)13)]	1 C	
FM (XP) Class I, Div. 1, Groups A, B, C, D[2)11)13)14)]	1 D	
FM (NI) Class I, II, III, Div. 2, Groups A, B, C, D, F, G + Ship approval[4)6)8)13)17)]	7 F	
FM (IS) Class I, II, III, Div. 1, Groups A, B, C, D, E, F, G + Ship approval[6)8)13)16)]	7 G	
FM (XP-AIS) Class I, Div. 1, Groups A, B, C, D, + Ship approval[6)8)11)13)16)]	7 H	

	Article No.	
SITRANS LG250 Guided radar level transmitter	**7ML5881-**	Ord. code
Continuous, contact, 75 m (246 ft) range. Monitors level and interface in liquids.	■ ■ ■ ■ ■ - ■ ■ ■ ■	■ ■ ■
FM (XP) Class I, Div. 1, Groups A, B, C, D + Ship approval[2)6)8)13)14)]	7 J	
CSA (NI) Class I, Div. 2, Groups A, B, C, D (DIP) Class II, III, Div. 1, Groups E, F, G[1)]	1 E	
CSA (IS) Class I, II, III, Div. 1, Groups A, B, C, D, E, F, G[5)13)]	1 F	
CSA (XP-IS) Class I, II, III, Div. 1, Groups A, B, C, D, E, F, G[2)8)11)12)13)]	1 G	
CSA (XP) Class I, II, III, Div. 1, Groups A, B, C, D, E, F, G[8)13)14)18)]	1 H	
CSA (NI) Class I, II, III Div. 2, Groups A, B, C, D, F, G + Ship approval[1)6)13)]	7 K	
CSA (IS) Class I, II, III, Div. 1, Groups A, B, C, D, E, F, G + Ship approval[6)13)16)]	7 L	
CSA (XP-IS) Class I, II, III, Div. 1, Groups A, B, C, D, E, F, G + Ship approval[6)8)11)32)]	7 M	
CSA (XP) Class I, II, III, Div. 1, Groups A, B, C, D, E, F, G + Ship approval[6)8)13)14)18)]	7 N	
NEPSI Ex ia IIC T6[5)13)]	2 A	
NEPSI Ex ia IIC T6 + DIP A20/21 TA T*[1)13)]	2 B	
NEPSI Ex d ia IIC T6[2)8)11)13)]	2 C	
NEPSI Ex d ia IIC T6 + DIP A20/21 TA T*[2)8)11)13)]	2 D	
NEPSI Ex d IIC T6[1)11)13)14)]	2 E	
NEPSI Ex d IIC T6 + DIP A20/21TA T[1)11)13)14)]	2 F	
NEPSI DIP A20/21 TA T*[1)13)14)]	2 G	
INMETRO Ex ia IIC T6 ... T1[5)13)]	3 A	
INMETRO Ex t IIIC T* IP6X, Da, Da/Db, Da/Dc, Db + Ex ia IIC T6, Ga, Ga/Gb[1)11)13)]	3 B	
INMETRO Ex d ia IIC T6 ... T1[2)8)11)13)]	3 C	
INMETRO Ex t IIIC T* IP6X, Da, Da/Db, Da/Dc, Db + Ex d ia IIC T6 Ga/Gb[1)8)11)13)]	3 D	
INMETRO Ex d IIC T6 ... T1[1)11)13)14)]	3 E	
INMETRO Ex t IIIC T* IP6X, Da, Da/Db, Da/Dc, Db + Ex d IIC T6 Ga/Gb[1)11)13)14)]	3 F	
INMETRO Ex t IIIC T* IP6X, Da, Da/Db, Da/Dc, Db[1)11)13)14)]	3 G	
KOSHA Ex d IIC T6 ... T1 – KE[1)11)13)14)]	4 A	
Korea KC ex free area	6 A	
GOST-R/EAC 0 Ex ia IIC T1 ... T6 X[13)]	5 A	
GOST-R/EAC 0 Ex ia IIC T1 ... T6 X + Ex t IIIC T ... IP66[1)13)]	5 B	
GOST-R/EAC 1 Ex d ia IIC T1 ... T6 X[2)8)11)13)]	5 C	
GOST-R/EAC 1 Ex d ia IIC T1 ... T6 X + Ex t IIIC T ... IP66[2)8)11)13)]	5 D	
GOST-R/EAC 1 Ex d IIC T1 ... T6 X[1)11)13)]	5 E	
GOST-R/EAC 0 Ex d IIC T1 ... T6 X + Ex t IIIC T ... IP66[1)11)13)]	5 F	
GOST-R/EAC Ex t IIIC T ... IP66[1)13)]	5 G	
Note: Version/Material, Process fitting/ Material, and Length options are available only with options of corresponding type.		
Probe version/Material		
Probe exchangeable cable ø 2 mm (0.08 inch) with gravity weight/316[19)20)]	A	
Probe exchangeable cable ø 2 mm (0.08 inch) center weight/316L[19)20)]	B	

4

© Siemens 2020

Selection and ordering data

SITRANS LG250 Guided radar level transmitter	Article No. 7ML5881-	Ord. code
Continuous, contact, 75 m (246 ft) range. Monitors level and interface in liquids.	■■■■■ - ■■■■	■■■
Probe exchangeable cable ø 4 mm (0.16 inch) with gravity weight/316L[9)19)20)]	C	
Probe exchangeable cable ø 4 mm (0.16 inch) with center weight/316L[9)19)20)]	D	
Probe exchangeable rod ø 8 mm (0.31 inch)/316L[9)19)]	E	
Probe exchangeable rod ø 12 mm (0.47 inch)/316L[9)19)]	F	
Probe coax version ø 21.3 mm (0.84 inch) with single hole/316L[9)19)20)]	G	
Probe coax version ø 21.3 mm (0.84 inch) with multiple hole/316L[19)20)]	H	
Probe coax version ø 42.2 mm (1.66 inch) with multiple hole/316L[9)19)20)]	K	
Probe exchangeable cable ø 4 mm (0.16 inch) with gravity weight/Alloy C22 (2.4602)[9)]	L	
Probe exchangeable cable ø 4 mm (0.16 inch) with centre weight/Alloy C22 (2.4602)[9)]	M	
Probe exchangeable rod ø 8 mm (0.31 inch) /Alloy C22 (2.4602)[9)]	N	
Probe exchangeable rod ø 12 mm (0.47 inch)/ Alloy C22 (2.4602)[9)]	P	
Probe coax version ø 21.3 mm (0.84 inch) with multiple hole/Alloy C22 (2.4602)[9)]	Q	
Probe coax version ø 42.2 mm (1.66 inch) with multiple hole/Alloy C22 (2.4602)[9)]	R	
Probe exchangeable rod ø 8 mm (0.31 inch)/ Duplex (1.4462)[9)]	S	
Exchangeable rod ø 12 mm (0.47 inch)/ Alloy C22 and 400 (2.4360)[9)]	T	
Exchangeable coated cable ø 4 mm with uncoated centering weight/PFA and 316[21)24)30)35)36)]	U	
Process fitting/Material		
Thread G 3/4" (DIN 3852-A) PN 6/316L	0 0	
Thread 3/4" NPT (ASME B1.20.1) PN 6/316L	0 1	
Thread G 3/4" (DIN 3852-A) PN 40/316L	0 2	
Thread 3/4" NPT (ASME B1.20.1) PN 40/316L	0 3	
Thread G 3/4" (DIN 3852-A) PN 100 / 316L[22)]	0 4	
Thread 3/4" NPT (ASME B1.20.1) PN 100/316L[22)]	0 5	
Thread G 1" (DIN 3852-A) PN 40/316L	0 6	
Thread 1" NPT (ASME B1.20.1) PN 40/316L	0 7	
Thread G 1" (DIN 3852-A) PN 100/316L[22)]	0 8	
Thread 1" NPT (ASME B1.20.1) PN 100/316L[22)]	1 0	
Thread G 1 1/2" (DIN 3852-A) PN 40/316L	1 1	
Thread 1 1/2" NPT (ASME B1.20.1) PN 40/316L	1 2	
Thread G1 1/2" (DIN 3852-A) PN 100/316L[22)]	1 3	
Thread 1 1/2" NPT (ASME B1.20.1) PN 100/316L[22)]	1 4	
Thread 2 NPT PN 40, ASME B1.20.1/316L[23)24)]	1 5	
Flange DN 25 PN 40 Form C, DIN 2501/316L	2 0	
Flange DN 25 PN 40 Form F, DIN 2501/316L	2 1	
Flange DN 40 PN 40 Form C, DIN 2501/316L	2 2	
Flange DN 50 PN 40 Form C, DIN 2501/316L	2 3	
Flange DN 50 PN 40 Form V13, DIN 2513/316L	2 4	
Flange DN 80 PN 40 Form C, DIN 2501/316L	2 5	

SITRANS LG250 Guided radar level transmitter	Article No. 7ML5881-	Ord. code
Continuous, contact, 75 m (246 ft) range. Monitors level and interface in liquids.	■■■■■ - ■■■■	■■■
Flange DN 80 PN 40 Form V13, DIN 2501/316L	2 6	
Flange DN 100 PN 16 Form C, DIN 2501/316L	2 7	
Flange DN 100 PN 16 Form V13, DIN 2501/316L	2 8	
Flange DN 100 PN 40 Form C, DIN 2501 /316L	3 0	
Flange DN 100 PN 40 Form V13, DIN 2513/316L	3 1	
Flange DN 150 PN 16 Form C, DIN 2501/316L	3 2	
Flange DN 50 PN 40 EN 1092-1 Form B1/316L	3 3	
Flange DN 80 PN 40 EN 1092-1 Form B1/316L	3 4	
Flange 1" 150 lb RF, ASME B16.5/316L	3 5	
Flange 1 1/2" 150 lb RF, ASME B16.5/316L	3 6	
Flange 2" 150 lb RF, ASME B16.5/316L	3 7	
Flange 2" 300 lb RF, ASME B16.5/316L	3 8	
Flange 3" 150 lb RF, ASME B16.5/316L	4 0	
Flange 3" 300 lb RF, ASME B16.5/316L	4 1	
Flange 4" 150 lb RF, ASME B16.5/316L	4 2	
Flange 4" 300 lb RF, ASME B16.5/316L	4 3	
Flange 6" 150 lb RF, ASME B16.5/316L	4 4	
Flange 6" 300 lb RF, ASME B16.5/316L	4 5	
Thread G 3/4" PN 40, DIN3852-A/ Alloy C22 (2.4602)[37)]	4 6	
Thread G 1" PN 40, DIN 3852-A/ Alloy C22 (2.4602)[37)]	4 7	
Thread G 1 1/2" PN 40, DIN 3852-A/ Alloy C22 (2.4602)	4 8	
Thread 1 1/2" NPT PN 40, ASME B1.20.1/Alloy C22 (2.4602)	5 0	
Flange DN 50 PN 40 Form C, DIN 2501/ 316L with Alloy C22 (2.4602) coating	5 1	
Flange DN 50 PN 40 Form B1, EN 1092-1/ 316L with Alloy C22 (2.4602) coating	5 2	
Flange DN 80 PN 40 Form B1, EN 1092-1/ 316L with Alloy C22 (2.4602) coating	5 3	
Flange DN 100 PN 40 Form B1, EN 1092-1/ 316L with Alloy C22 (2.4602) coating	5 4	
Flange DN 150 PN 16 Form B1, EN 1092-1/ 316L with Alloy C22 (2.4602) coating	5 5	
Flange DN 200 PN 16 Form B1, EN 1092-1/ 316L with Alloy C22 (2.4602) coating	5 6	
Flange 2" 150 lb RF, ASME B16.5/316L with Alloy C22 (2.4602) coating	5 7	
Flange 2" 300 lb RF, ASME B16.5/316L with Alloy C22 (2.4602) coating	5 8	
Flange 3" 150 lb RF, ASME B16.5/316L with Alloy C22 (2.4602) coating	6 0	
Flange 4" 150 lb RF, ASME B16.5/316L with Alloy C22 (2.4602) coating	6 1	
Flange 4" 300 lb RF, ASME B16.5/316L with Alloy C22 (2.4602) coating	6 2	
Flange 6" 150 lb RF, ASME B16.5/316L with Alloy C22 (2.4602) coating	6 3	
Flange 6" 300 lb RF, ASME B16.5/316L with Alloy C22 (2.4602) coating	6 4	
Thread G 3/4" (DIN 3852-A) PN 40/Duplex 1.4462	6 5	

© Siemens 2020

Selection and ordering data

SITRANS LG250 Guided radar level transmitter Continuous, contact, 75 m (246 ft) range. Monitors level and interface in liquids.	**Article No.** 7ML5881-	Ord. code
Flange DN 80 PN 40 Form F, DIN 2501/Duplex (1.4462)	6 6	
Flange DN 50 PN 40 Form B1, EN 1092-1/ Duplex (1.4462)	6 7	
Flange 1" 150 lb RF, ASME16.5/Duplex (1.4462)	6 8	
Flange 1 1/2" 150 lb RF, ASME B16.5/Duplex (1.4462)	7 0	
Flange 2" 150 lb RF, ASME B16.5/Duplex (1.4462)	7 1	
Flange 2" 300 lb RF, ASME B16.5/Duplex (1.4462)	7 2	
Flange 2" 600 lb RF, ASME B16.5/Duplex (1.4462)	7 3	
Flange 3" 150 lb RF, ASME B16.5/Duplex (1.4462)	7 4	
Flange 3" 300 lb RF, ASME B16.5/Duplex (1.4462)	7 5	
Flange 4" 150 lb RF, ASME B16.5/Duplex (1.4462)	7 6	
Flange 4" 150 lb FF, ASME B16.5/Duplex (1.4462)	7 7	
Flange 4" 300 lb RF, ASME B16.5/Duplex (1.4462)	7 8	
Flange 4" 600 lb RF, ASME B16.5/Duplex (1.4462)	8 0	
Thread 1 1/2" NPT PN 40, ASME B1.20.1/Alloy 400 (2.4360)	8 1	
Flange 2" 150 lb RF, ASME B16.5/Alloy 400 (2.4360)	8 2	
Flange 2" 300 lb RF, ASME B16.5/Alloy 400 (2.4360) solid	8 3	
Flange 3" 150 lb RF, ASME B16.5/Alloy 400 (2.4360)	8 4	
Flange 3" 300 lb RF, ASME B16.5/Alloy 400 (2.4360)	8 5	
Flange 3" 300 lb RJF, ASME B16.5/Alloy 400 (2.4360)	8 6	
Flange 4" 150 lb RF, ASME B16.5/Alloy 400 (2.4360)	8 7	
Flange 4" 300 lb RF, ASME B16.5/Alloy 400 (2.4360)	8 8	
Flange DN 25 PN 40 Form C, DIN 2501/ Alloy C22 (2.4602) solid[37]	9 0	L 1 A
Flange DN 25 PN 40 Form B1, EN 1092-1/ Alloy C22 (2.4602) solid[37]	9 0	L 1 B
Flange DN 80 PN 40 Form B1, EN 1092-1/ Alloy C22 (2.4602) solid	9 0	L 1 C
Flange 1" 150 lb RF, ASME B16.5/Alloy C22 (2.4602) solid[37]	9 0	L 1 D
Flange 1 1/2" 150 lb RF, ASME B16.5/ Alloy C22 (2.4602) solid[37]	9 0	L 1 E
Flange 1 1/2" 300 lb RF, ASME B16.5/ Alloy C22 (2.4602) solid[37]	9 0	L 1 F
Flange 2" 150 lb RF, ASME B16.5/ Alloy C22 (2.4602) solid	9 0	L 1 G
Flange 2" 300 lb RF, ASME B16.5/ Alloy C22 (2.4602) solid	9 0	L 1 H
Flange 2" 600 lb RF, ASME B16.5/ Alloy C22 (2.4602) solid	9 0	L 1 J
Flange 2" 1 500 lb RJF, ASME B16.5/ Alloy C22 (2.4602) solid	9 0	L 1 K
Flange 3" 150 lb RF, ASME B16.5/ Alloy C22 (2.4602) solid	9 0	L 1 L
Flange 3" 300 lb RF, ASME B16.5/ Alloy C22 (2.4602) solid	9 0	L 1 M
Flange 3" 300 lb RF, ASME B16.5/316L with Alloy C22 (2.4602) coating	9 0	L 1 N

SITRANS LG250 Guided radar level transmitter Continuous, contact, 75 m (246 ft) range. Monitors level and interface in liquids.	**Article No.** 7ML5881-	Ord. code
Flange 4" 150 lb RF, ASME B16.5/ Alloy C22 (2.4602) solid	9 0	L 1 P
Flange 4" 150 lb FF, ASME B16.5/ Alloy C22 (2.4602) solid	9 0	L 1 Q
Flange 4" 300 lb RF, ASME B16.5/ Alloy C22 (2.4602) solid	9 0	L 1 R
Flange 4" 300 lb RJF, ASME B16.5/ Alloy C22 (2.4602) solid	9 0	L 1 S
Flange 4" 300 lb LT, ASME B16.5/ Alloy C22 (2.4602) solid	9 0	L 1 T
Flange 4" 600 lb RJF, ASME B16.5/ Alloy C22 (2.4602) solid	9 0	L 1 U
Flange 6" 150 lb RF, ASME B16.5/ Alloy C22 (2.4602) solid	9 0	L 1 V
Flange 2 1/2" 600 lb RF, Masoneilan/ Alloy C22 (2.4602) solid	9 0	L 1 W
Flange 2" 600 lb RF, ASME B16.5/316/316 L[24]	9 0	L 1 X
Flange 3" 600 lb RF, ASME B16.5/316/316L[24][25]	9 0	L 1 Y
Flange 4" 600 lb RF, ASME B16.5/316/316L[31]	9 0	L 2 A
Thread R1½ PN40, EN 10226-1/316L[38]		L 2 B
Electronics		
Two-wire 4 ... 20 mA/HART	0	
Four-wire Modbus[2][8][11]	1	
Two-wire 4 ... 20 mA/HART with SIL qualification[9][10]	2	
Four-wire 4 ... 20 mA/HART; 90 ... 253 V AC; 50/60Hz[2][8][11][34]	3	
Four-wire 4 ... 20 mA/HART; 9.6 ... 48 V DC; 20 ... 42 V AC[2][8][11][34]	4	
PROFIBUS PA[5][8]	5	
FOUNDATION Fieldbus[5][8]	6	
Seal/Second line of defense/ Process temperature		
FKM (SHS FPM 70C3 GLT)/without glass seal/-40 ... +80 °C (-40 ... +176 °F)	A	
FKM (SHS FPM 70C3 GLT)/without glass seal/ -40 ... +150 °C (-40 ... +302 °F)	B	
FKM (SHS FPM 70C3 GLT)/with glass seal/ -40 ... +150 °C (-40 … +302 °F)[26]	C	
FFKM (Kalrez 6375)/without/-20 ... 150 °C (-4 ... +302 °F)	D	
FFKM (Kalrez 6375)/with/-20 ... +150 °C (-4 ... +302 °F)[5]	E	
FFKM (Kalrez 6375)/with glass seal/ -20 ... +200 °C (-4 ... +392 °F)[26]	F	
EPDM (A+P 75.5/KW75F)/without glass seal/ -40 ... +80 °C (-40 ... +176 °F)	G	
EPDM (A+P 75.5/KW75F)/without glass seal/ -40 ... +150 °C (-40 ... +302 °F)[26]	H	
EPDM (A+P 75.5/KW75F)/with glass seal/-40 ... +150 °C (-40 ... +302 °F)[26]	J	
Silicone FEP coated (A+P FEP-O-SEAL)/ without glass seal/-40 ... +80 °C (-40 ... +176 °F)	K	
Silicone FEP coated (A+P FEP-O-SEAL)/ without glass seal/-40 ... +150 °C (-40 ... +302 °F)	L	
Silicone FEP coated (A+P FEP-O-SEAL)/ with glass seal/-40 ... +150 °C (-40 ... +302 °F)[26]	M	
With borosilicate glass lead through for volatile substances, e.g. ammonia/with glass seal/-60 ... +150 °C (-76 ... +302 °F)[26]	N	
FFKM (Kalrez 6375)/without glass seal/-20 … +200 °C (-4 ... +392 °F)	P	
FKM (SHS FPM 70C3 GLT)/with glass seal/-40 ... 80 °C (-40 ... +176 °F)[26]	Q	

© Siemens 2020

Selection and ordering data

SITRANS LG250 Guided radar level transmitter	Article No. 7ML5881-	Ord. code
Continuous, contact, 75 m (246 ft) range. Monitors level and interface in liquids.	■■■■■-■■■■	■■■
Housing/Protection/Cable		
Note: for installation of remote display, 7ML5840, with LG two chamber housing options, contact PVC		
Plastic IP66/IP67 M20 x 1.5/blind stopper[11)15)]	A	
Plastic IP66/IP67 1/2" NPT/blind stopper[8)11)]	B	
Plastic 2-chamber/IP66/IP67/M20 x 1.5/ blind stopper	G	
Plastic 2-chamber/IP66/IP67 /1/2" NPT/ blind stopper	H	
Aluminum/IP66/IP68 (0.2 bar) M20 x 1.5/ Blind stopper[8)11)]	C	
Aluminum/IP66/IP68 (0.2 bar) 1/2" NPT/ Blind stopper[8)11)]	D	
Aluminum double chamber/IP66/IP68 (0.2 bar) M20 x 1.5 / Blind stopper	E	
Aluminum double chamber/IP66/IP68 (0.2 bar) 1/2" NPT/Blind stopper	F	
Stainless Steel (precision casting) 316L/ IP66/IP68 (0.2 bar) M20 x 1.5/ Blind stopper[9)11)]	L	
Stainless Steel (precision casting) 316L/ IP66/IP68 (0.2 bar) 1/2" NPT/ Blind stopper[8)11)]	M	
Stainless Steel (electropolished) 316L/IP66/IP68 (0.2 bar) M20 x 1.5/ Blind stopper[8)11)]	N	
Stainless Steel (electropolished) 316L/IP66/IP68 (0.2 bar) 1/2" NPT/ Blind stopper[8)11)]	P	
Stainless Steel double chamber/IP66/IP68 (0.2 bar) M20 x 1.5/Blind stopper	Q	
Stainless Steel double chamber/IP66/IP68 (0.2 bar) 1/2" NPT/Blind stopper	R	
Aluminum/IP66/IP68 (0.2 bar) M20 x 1.5/ Cable gland stainless steel[8)11)]	S	
Aluminum double chamber/IP66/IP68 (0.2 bar) M20 x 1.5/Cable gland stainless steel	T	
Stainless Steel (precision casting) 316L/ IP66/IP68 (0.2 bar) M20 x 1.5/Cable gland stainless steel[11)28)]	U	
Stainless Steel (electropolished) 316L/IP66/IP68 (0.2 bar) M20 x 1.5/Cable gland stainless steel[11)28)]	V	
Stainless steel single chamber (precision casting)/IP66/IP68 (0.2 bar) M20 x 1.5/ Cable gland brass nickel-plated	W	
Aluminum single chamber/IP66/IP68 (0.2 bar) M20 x 1.5/Cable gland brass nickel-plated	X	
Stainless steel single chamber (precision casting)/IP66/ IP68 (0.2 bar) M20 x 1.5/ Cable gland brass nickel-plated	Y	
Stainless steel double chamber / IP66/ IP68 (0.2 bar) M20 x 1.5 / Cable gland brass nickel-plated	J	
Aluminum single chamber/IP66/IP68 (0.2 bar) with M20 x 1.5/Plug connector Harting HAN 7D (straight)	Z	Q 1 A
Aluminum single chamber/IP66/IP68 (0.2 bar) with M20 x 1.5/Special HARTING plug (bent) according to Tier One (ZB7555)	Z	Q 1 B
Remote stainless steel single chamber housing, electropolished/IP66/IP67 with cable outlet IP68 (electronics separated by cable); M20 x 1.5/blind plug[11)27)]	Z	Q 2 A
Remote plastic single chamber housing /IP66/IP67 with cable outlet IP68 (electronics separated by cable); M20 x 1.5/blind plug[11)27)]	Z	Q 2 B

SITRANS LG250 Guided radar level transmitter	Article No. 7ML5881-	Ord. code
Continuous, contact, 75 m (246 ft) range. Monitors level and interface in liquids.	■■■■■-■■■■	■■■
Lengths		
Rod ø 8 mm/316L		
300 ... 1 000 mm (11.81 ... 39.37 inch)[29)]	0	
1 001 ... 2 000 mm (39.41 ... 78.74 inch)[29)]	1	
2 001 ... 3 000 mm (78.78 ... 118.11 inch)[29)]	2	
3 001 ... 4 000 mm (118.15 ... 157.48 inch)[29)]	3	
4 001 ... 5 000 mm (157.52 ... 196.85 inch)[29)]	4	
5 001 ... 6 000 mm (196.89 ... 236.22 inch)[29)]	5	
Rod ø 8 mm/Duplex		
300 ... 1 000 mm (11.81 ... 39.37 inch)[29)]	9	R 1 A
1 001 ... 2 000 mm (39.41 ... 78.74 inch)[29)]	9	R 1 B
2 001 ... 3 000 mm (78.78 ... 118.11 inch)[29)]	9	R 1 C
3 001 ... 4 000 mm (118.15 ... 157.48 inch)[29)]	9	R 1 D
4 001 ... 5 000 mm (157.52 ... 196.85 inch)[29)]	9	R 1 E
5 001 ... 6 000 mm (196.89 ... 236.22 inch)[29)]	9	R 1 F
Rod ø 8 mm or ø 12 mm /Alloy C22 and 400		
300 ... 1 000 mm (11.81 ... 39.37 inch)[29)]	9	R 1 J
1 001 ... 2 000 mm (39.41 ... 78.74 inch)[29)]	9	R 1 K
2 001 ... 3 000 mm (78.78 ... 118.11 inch)[29)]	9	R 1 L
3 001 ... 4 000 mm (118.15 ... 157.48 inch)[29)]	9	R 1 M
4 001 ... 5 000 mm (157.52 ... 196.85 inch)[29)]	9	R 1 N
5 001 ... 6 000 mm (196.89 ... 236.22 inch)[29)]	9	R 1 P
Rod ø 12 mm/316L		
300 ... 1 000 mm (11.81 ... 39.37 inch)[29)]	9	R 2 A
1 001 ... 2 000 mm (39.41 ... 78.74)[29)]	9	R 2 B
2 001 ... 3 000 mm (78.78 ... 118.11 inch)[29)]	9	R 2 C
3 001 ... 4 000 mm (118.15 ... 157.48 inch)[29)]	9	R 2 D
Cable lengths ø 2 or 4 mm/316L		
501 ... 1 000 mm (19.72 ... 39.37 inch)	9	R 2 E
1 000 ... 5 000 mm (39.37 ... 196.85 inch)	9	R 2 F
5 001 ... 10 000 mm (196.89 ... 393.70 inch)	9	R 2 G
10 001 ... 15 000 mm (393.74 ... 590.55 inch)	9	R 2 H
15 001 ... 20 000 mm (590.59 ... 787.40 inch)	9	R 2 J
20 001 ... 25 000 mm (787.44 ... 984.25 inch)	9	R 2 K
25 001 ... 30 000 mm (984.29 ... 1 181.10 inch)	9	R 2 L
30 001 ... 35 000 mm (1 181.14 ... 1 377.95 inch)	9	R 2 M
35 001 ... 40 000 mm (1 377.99 ... 1 574.80 inch)	9	R 2 N
40 001 ... 45 000 mm (1 574.84 ... 1 771.65 inch)	9	R 2 P
45 001 ... 50 000 mm (1 771.69 ... 1 968.50 inch)	9	R 2 Q
50 001 ... 55 000 mm (1 968.54 ... 2 165.35 inch)	9	R 2 R
55 001 ... 60 000 mm (2 165.39 ... 2 362.20 inch)	9	R 2 S
60 001 ... 65 000 mm (2 362.24 ... 2 559.06 inch)	9	R 2 T
65 001 ... 70 000 mm (2 559.09 ... 2 755.91 inch)	9	R 2 U
70 001 ... 75 000 mm (2 755.94 ... 2 952.76 inch)	9	R 2 V

© Siemens 2020

Selection and ordering data

	Article No.												Order code
SITRANS LG250 Guided radar level transmitter	**7ML5881-**											Ord. code	
Continuous, contact, 75 m (246 ft) range. Monitors level and interface in liquids.	■	■	■	■	■	-	■	■	■		■	■	
Cable Lengths ø 2 mm or ø 4 mm/Alloy C22													
501 ... 1 000 mm (19.72 ... 39.37 inch)									9	R	4	A	
1 001 ... 5 000 mm (39.41 ... 196.85 inch)									9	R	4	B	
5 001 ... 10 000 mm (196.89 ... 393.70 inch)									9	R	4	C	
10 001 ... 15 000 mm (393.74 ... 590.55 inch)									9	R	4	D	
15 001 ... 20 000 mm (590.59 ... 787.40 inch)									9	R	4	E	
20 001 ... 25 000 mm (787.44 ... 984.25 inch)									9	R	4	F	
25 001 ... 30 000 mm (984.29 ... 1 181.10 inch)									9	R	4	G	
30 001 ... 35 000 mm (1 181.14 ... 1 377.95 inch)									9	R	4	H	
35 001 ... 40 000 mm (1 377.99 ... 1 574.80 inch)									9	R	4	J	
40 001 ... 45 000 mm (1 574.84 ... 1 771.65 inch)									9	R	4	K	
45 001 ... 50 000 mm (1 771.69 ... 1 968.50 inch)									9	R	4	L	
50 001 ... 55 000 mm (1 968.54 ... 2 165.35 inch)									9	R	4	M	
55 001 ... 60 000 mm (2 165.39 ... 2 362.20 inch)									9	R	4	N	
60 001 ... 65 000 mm (2 362.24 ... 2 559.06 inch)									9	R	4	P	
65 001 ... 70 000 mm (2 559.09 ... 2 755.91 inch)									9	R	4	Q	
70 001 ... 75 000 mm (2 755.94 ... 2 952.76 inch)									9	R	4	R	
Coax ø 21.3 mm/316L													
300 ... 1 000 mm (11.81 ... 39.37 inch)[29]									9	R	3	A	
1 001 ... 2 000 mm (39.41 ... 78.74 inch)[29]									9	R	3	B	
2 001 ... 3 000 mm (78.78 ... 118.11 inch)[29]									9	R	3	C	
3 001 ... 4 000 mm (118.15 ... 157.48 inch)[29]									9	R	3	D	
4 001 ... 5 000 mm (157.52 ... 196.85 inch)[29]									9	R	3	E	
5 001 … 6 000 mm (196.89 … 236.22 inch)[29]									9	R	3	F	
Coax ø 21.3 mm/Alloy C22													
300 ... 1 000 mm (11.81 ... 39.37 inch)[29]									9	R	5	A	
1 001 ... 2 000 mm (39.41 ... 78.74 inch)[29]									9	R	5	B	
2 001 ... 3 000 mm (78.78 ... 118.11 inch)[29]									9	R	5	C	
3 001 ... 4 000 mm (118.15 ... 157.48 inch)[29]									9	R	5	D	
4 001 ... 5 000 mm (157.52 ... 196.85 inch)[29]									9	R	5	E	
5 001 ... 6 000 mm (196.89 ... 236.22 inch)[29]									9	R	5	F	
Coax ø 42.2 mm/316L													
300 ... 1 000 mm (11.81 ... 39.37 inch)[29]									9	R	3	G	
1 001 ... 2 000 mm (39.41 ... 78.74 inch)[29]									9	R	3	H	
2 001 ... 3 000 mm (78.78 ... 118.11 inch)[29]									9	R	3	J	
3 001 ... 4 000 mm (118.15 ... 157.48 inch)[29]									9	R	3	K	
4 001 ... 5 000 mm (157.52 … 196.85 inch)[29]									9	R	3	L	
5 001 … 6 000 mm (196.89 … 236.22 inch)[29]									9	R	3	M	
Coax ø 42.2 mm/Alloy C22													
300 ... 1 000 mm (11.81 ... 39.37 inch)[29]									9	R	5	G	
1 001 ... 2 000 mm (39.41 ... 78.74 inch)[29]									9	R	5	H	
2 001 ... 3 000 mm (78.78 ... 118.11 inch)[29]									9	R	5	J	
3 001 ... 4 000 mm (118.15 ... 157.48 inch)[29]									9	R	5	K	
4 001 ... 5 000 mm (157.52 ... 196.85 inch)[29]									9	R	5	L	
5 001 ... 6 000 mm (196.89 ... 236.22 inch)[29]									9	R	5	M	
Cable lengths ø 4 mm PFA													
300 ... 1 000 mm (12 ... 39.37 inch)									9	R	6	A	
1 001 ... 2 000 mm (39.41 ... 78.74 inch)									9	R	6	B	
2 001 ... 5 000 mm (78.77 ... 196.85 inch)									9	R	6	C	
5 001 ... 10 000 mm (196.89 ... 393.70 inch)									9	R	6	D	
10 001 ... 15 000 mm (393.74 ... 590.55 inch)									9	R	6	E	
15 001 ... 20 000 mm (590.59 ... 787.40 inch)									9	R	6	F	
20 001 ... 25 000 mm (787.44 ... 984.25 inch)									9	R	6	G	
25 001 ... 32 000 mm (984.29 ... 1 259.84 inch)									9	R	6	H	

	Order code
Further designs (mandatory)	
Please add "**-Z**" to Article No. and specify Order code(s).	
Supplementary electronics	
Without	**A00**
Additional current output 4 ... 20 mA[11]	**A01**
Dimensions centering weight (diameter/height)	
Without	**B00**
ø 40/30 mm	**B01**
ø 45/30 mm (for 2 inch tubes)	**B02**
ø 75/30 mm (for 3 inch tubes)	**B03**
ø 95/30 mm (for 4 inch tubes)	**B04**
ø 40 mm/30 mm ø 1.57/1.18 inch (for 2 inch Schedule 160)	**B05**
ø 45 mm/30 mm (for 2 inch tubes) ø 1.77/1.18 inch (for 2 inch Schedule 40/80)	**B06**
ø 75 mm/30 mm (for 3 inch tubes) ø 2.95/1.18 inch (for 3 inch Schedule 10/40)	**B07**
ø 95 mm/30 mm (for 4 inch tubes) ø 3.74/1.18 inch (for 4 inch Schedule 80)	**B08**
Rod mounted	
Without Rod, applicable for coax or cable probe types only	**C00**
Mounted	**C01**
Not mounted	**C02**
Indicating/adjustment module	
Without	**E00**
Mounted	**E01**
Laterally mounted	**E02**
Language of display	
German	**L00**
English	**L01**
French	**L02**
Dutch	**L03**
Italian	**L04**
Spanish	**L05**
Portuguese	**L06**
Russian	**L07**
Chinese	**L08**
Japanese	**L09**
Operating instructions	
German	**M00**
English	**M01**
French	**M02**
Spanish	**M03**
Further designs (optional)	
Please add "**-Z**" to Article No. and specify Order code(s).	
Enter the total insertion length in plain text description	**Y01**
Enter the total length of rigid part (cable version only) range from 100 ... 1 000 mm	**Y02**
Remote electronic cable lengths: 2 m (6.6 ft). Only available with Housing options Q2A and Q2B	**Y10**
Remote electronic cable lengths: 5 m (16.4 ft). Only available with Housing options Q2A and Q2B	**Y11**

© Siemens 2020

Selection and ordering data

	Order code
Remote electronic cable lengths: 10 m (32.8 ft). Only available with Housing options Q2A and Q2B	**Y12**
Identification Label (measurement loop) stainless steel, 40 characters max, add in plain text. To add more than one line use a coma "," for line break.	**Y17**
Identification Label (measurement loop) foil, 40 characters max, add in plain text. To add more than one line use a coma "," for line break.	**Y18**
Material Inspection certificate 3.1 of EN 10204	**C05**
3.1-Inspection Certificate for instrument (EN 10204)[30]	**C12**
Inspection certificate 3.1 (EN 10204, NACE MR 0175) - material[30][31] Note: 316L probes include NACE MR 0175 and MR 0103, non 316L probes include MR 0175 only and plated flange designs are not available with NACE certificate.	**D07**
3.1-Inspection Certificate for instrument with test data (EN 10204)[30]	**C25**
2.2-Factory certificate for material (EN 10204)[30]	**C15**
Quality and test plan[30]	**C26**
Dye penetration test, results confirmed via a 3.1 certificate/instrument (EN10204)[30]	**C13**
X-ray test + 3.1 certificate/instrument[30]	**C14**
Positive material identification test + 3.1 certificate/instrument[30]	**C16**
Roughness test + 3.1 certificate/instrument[30]	**C18**
Pressure test + 3.1 certificate/instrument[30]	**C31**
Helium leak test + 3.1 certificate/instrument[30]	**C32**
Pressure test according to Norsok + 3.1 certificate/instrument[30]	**C61**
5 point calibration certificate (min. length 500 mm)[30]	**C62**
Pressure test (acc. to ASME B31.1), incl. 3.1 Inspection certificate[30]	**C63**
Certificate suitable for tropical regions with, all attachment parts of metal (2.1 factory certificate)	**C65**
Operating Instructions	
All literature is available to download for free, in a range of languages, at	

http://www.siemens.com/processinstrumentation/documentation

Accessories	Article No.
SITRANS LG, GWR sensor Display Module	**A5E34143449**
SITRANS LG, two-wire 4 ... 20 mA/HART electronic	**A5E35637821**
SITRANS LG, USB communicator	**A5E35192015**
SITRANS LG, Mounting eye M8 x 20	**A5E36653574**
SITRANS LG, Mounting eye M12 x 20	**PBD:51041448**
SITRANS LG, Mounting spring	**PBD:51041449**
Siemens Intrinsically Safe Barrier (DC powered), ATEX II 1 G EEx ia	**7NG4124-0AA00**
SITRANS RD100, loop powered display - see Chapter 7	**7ML5741-.....-.**
SITRANS RD150, remote digital display for 4 ... 20 mA and HART devices - see Chapter 7	**7ML5742-.....-....**
SITRANS RD200, universal input display with Modbus conversion - see Chapter 7	**7ML5740-.....-..**
SITRANS RD300, dual line display with totalizer and linearization curve and Modbus conversion - see Chapter 7	**7ML5744-.....-..**
For applicable back up point level switch - see point level measurement section	

Note: some configuration options are not available.
For restriction information see the online PIA configuration tool.

1) Not available with Plastic and Stainless steel (electropolished) Housing/Protection/Cable options and certain glands.
2) Available only with Metallic, Double chamber Housing/Protection/Cable options and certain glands.
3) Not available with Remote or Stainless steel (electropolished) Housing/Protection/Cable options and certain glands.
4) Not available with Stainless steel (electropolished) Housing/Protection/Cable options and certain glands.
5) Not available with certain glands.
6) Not available with Version/Material option K, L, M, N, P, Q, R, S, T, and U.
7) Not available with Length options 3, 4, 5, R2C, and R2D.
8) Available only with Supplementary electronic option A00.
9) Not available with Seal/Second line of defense/Process temperature option N.
10) Not available with Housing/Protection/Cable option Q1B.
11) Not available with Indicating/adjustment module option E02.
12) Not available with Process fitting/Material options 00 and 01.
13) Available only with Electronic options 0 ... 4.
14) Available only with glass seal options.
15) Available only with Seal/Second line of defense/Process temperature options C, D, E, F, H, J, M, N, Q.
16) Not Available with Housing/Protection/Cable options W, X, Y, J, Q1A, and Q1B.
17) Not Available with Seal/Second line of defense/Process temperature option P.
18) Available only with Single chamber, Aluminum and Stainless steel (precision casting) Housing/Protection/Cable options.
19) Available only with Dimensions centering weight option B00.
20) Available only with Rod mounted option C00.
21) Not available with Dimensions centering weight option B00.
22) Available only with Seal/Second line of defense/Process temperature option N.
23) Not available with Version/Material options F, K, L, M, N, P, Q, R, S, and T.
24) Not available with Seal/Process temperature options A, G, K, N, and Q.
25) Available only with Version/Material options A ... K.
26) Not available with Remote Housing/Protection/Cable options.
27) Not available with some Seal/Process temperature options including glass.
28) Not available with Supplementary electronics options.
29) Not available with Y02.
30) Listed Certificates are not available with all configurations, please contact factory for more information.
31) Available only with 316L Probes. NACE is not available with coated, plated, or hygienic connections.
32) Available only with Housing/Protection/Cable options E, F, N, Q, R, T.
33) Available only with Housing/Protection/Cable options C, D, E, F, L, M, N, P, Q, R, S, T, U, V, Q2A, and Q2B.
34) Available only with Double chamber, Plastic and Metallic Housing/Protection/Cable options and certain glands.
35) Available only with Approvals options OA (CE only) and 1D.
36) Available only with ø 4 mm PFA Length options.
37) Not available with Probe version/Material option P.
38) Available only with Probe version/Material options G and H.

Note: Please consult manual for further details.

© Siemens 2020

Selection and ordering data

	Article No.	
SITRANS LG260 Guided radar level transmitter ↗	**7ML5882-**	Ord. code
Continuous, contact, 60 m (197 ft) range. Monitors level in solids.	■■■■■ - ■■■■	■■■
↗ Click on the Article No. for the online configuration in the PIA Life Cycle Portal.		
Approvals		
General purpose (CSA, FM, CE)[6]	0 A	
Shipping approval[4)5)7)8)9)]	0 B	
Overfill protection (WHG; VLAREM)[5)8)]	0 C	
ATEX II 1G, 1/2G, 2G Ex ia IIC T6[5)8)]	0 E	
ATEX II 1G, 1/2G, 2G Ex ia IIC + Overfill (WHG; VLAREM)[5)8)]	0 F	
ATEX II 1G, 1/2G, 2G Ex ia IIC T6 + shipping approval[4)5)7)8)9)10)]	0 G	
ATEX II 1G,1/2G,2G Ex ia IIC + II 1D,1/2D,1/3D, 2D IP66[1)5)8)]	0 H	
ATEX II 1/2G, 2G Ex d ia IIC T6[2)5)8)9)10)]	0 J	
ATEX II 1/2G, 2G Ex d ia IIC + shipping approval[2)5)7)8)9)10)]	0 L	
ATEX II 1/2G, II 2G Ex db ia IIC T6 ... T1 Ga/Gb, Gb + II 1D, 1/2D, 1/3D, 2D Ext IIIC T* Da, Da/Db, Da/Dc, Db[2)5)8)9)10)]	0 M	
ATEX II 1/2G, 2G Ex d IIC T6[1)8)10)11)]	0 N	
ATEX II 1G, II 1/2G, II 2G Ex ia IIC T6...T1 Ga, Ga/Gb, Gb /IEC Ex ia IIC T6...T1 Ga, Ga/Gb, Gb[8)]	0 W	
ATEX II 1/2G, 2G Ex d IIC + shipping approval[1)7)8)9)10)11)]	0 Q	
ATEX II 1/2G,2G Ex d IIC + II 1D, 1/2D, 1/3D, 2D IP66[1)8)10)11)]	0 R	
ATEX II 1D, 1/2D, 2D IP6x T [1)8)11)]	0 S	
IEC Ex ia IIC T6[5)8)]	0 T	
IEC Ex ia IIC T6...T1 Ga, Ga/Gb, Gb + Ex t IIIC T[1)8)11)]	0 U	
IEC Ex d ia IIC T6[2)5)8)9)10)]	1 A	
IEC Ex d ia IIC T6 + IEC IP6x T tD[2)5)8)9)10)]	1 B	
IEC Ex db IIC T6 ... T1 Ga/Gb, Gb[1)8)10)11)]	1 C	
IEC Ex db IIC T6 ... T1 Ga/Gb, Gb + IEC Ex t IIIC T[8)10)11)19)]	1 D	
FM (NI) Class I, Div. 2, Groups A, B, C, D[3)5)8)9)]	1 F	
FM (NI) Class I, Div. 2, Groups A, B, C, D + Ship approval[3)5)7)8)9)10)]	1 G	
FM (IS) Class I, II, III, Div. 1, Groups A, B, C, D, E, F[5)8)9)]	1 H	
FM (IS) Class I, II, III, Div. 1, Groups A, B, C, D, E, F, G + shipping approval[4)5)7)8)9)10)]	1 J	
FM (XP-AIS) Class I, II, III, Div. 1, Groups A, B, C, D, E, F, G[2)5)8)9)10)]	1 K	
FM (XP-AIS) Class I, II, III, Div. 1, Groups A, B, C, D, E, F, G + shipping approval[2)5)7)8)9)10)]	1 L	
FM (XP) Class I, Div. 1, Groups A, B, C, D[8)10)19)]	1 M	
CSA (NI) Class I, Div. 2, Groups A, B, C, D; (DIP) Class II, III, Div. 1, Groups E, F, G[1)5)10)]	1 N	
CSA (IS) Class I, II, III, Div. 1, Groups A, B, C, D, E, F, G[5)8)]	1 P	
CSA (XP-IS) Class I, II, III, Div. 1, Groups A, B, C, D, E, F, G[2)5)8)9)10)]	1 Q	
CSA (XP) Class I, II, III, Div. 1, Groups A, B, C, D, E, F, G[8)9)10)11)19)]	1 R	
NEPSI Ex ia IIC T6[5)8)]	2 A	
NEPSI Ex ia IIC T6 + DIP A20/21 TA T*[1)5)8)]	2 B	
NERSI Ex d ia IIC T6[2)5)8)9)10)]	2 C	
NEPSI Ex d ia IIC T6 + DIP A20/21 TA T*[2)5)8)9)10)]	2 D	
NEPSI Ex d IIC T6[8)10)19)]	2 E	
NEPSI Ex d IIC T6 + DIP A20/21 TA T*[8)10)19)]	2 F	
NEPSI DIP A20/21 TA T*[1)8)]	2 G	
INMETRO Ex ia IIC T6 ... T10[5)8)]	3 A	

	Article No.	
SITRANS LG260 Guided radar level transmitter	**7ML5882-**	Ord. code
Continuous, contact, 60 m (197 ft) range. Monitors level in solids.	■■■■■ - ■■■■	■■■
INMETRO Ex t IIIC T* IP6X, Da, Da/Db, Da/Dc, Db + Ex ia IIC T6, Ga, Ga/Gb[1)5)8)10)]	3 B	
INMETRO Ex d ia IIC T6 ... T1[2)5)8)9)10)]	3 C	
INMETRO Ex t IIIC T* IP6X, Da, Da/Db, Da/Dc, Db + Ex d ia IIC T6 Ga/Gb[2)5)8)9)10)]	3 D	
INMETRO Ex d IIC T6 ... T1[8)10)19)]	3 E	
INMETRO Ex t IIIC T* IP6X, Da, Da/Db, Da/Dc, Db + Ex d IIC T6 Ga/Gb[8)10)19)]	3 F	
INMETRO Ex t IIIC T* IP6X, Da, Da/Db, Da/Dc, Db[1)5)8)10)]	3 G	
KOSHA Ex d IIC T6 ... T1 – KE[8)10)19)]	4 A	
Korea KC ex free area[8)]	6 A	
GOST-R/EAC 0 Ex ia IIC T1 ... T6 X[8)]	5 A	
GOST-R/EAC 0 Ex ia IIC T1 ... T6 X + Ex t IIIC T ... IP66[1)8)]	5 B	
GOST-R/EAC 1 Ex d ia IIC T1 ... T6 X[2)8)9)10)]	5 C	
GOST-R/EAC 1 Ex d ia IIC T1 ... T6 X + Ex t IIIC T ... IP66[2)8)9)10)]	5 D	
GOST-R/EAC 1 Ex d IIC T1 ... T6 X[8)10)19)]	5 E	
GOST-R/EAC 0 Ex d IIC T1 ... T6 X + Ex t IIIC T ... IP66[8)10)19)]	5 F	
GOST-R/EAC Ex t IIIC T ... IP66[1)8)]	5 G	
Note: Version/Material, Process fitting/ Material, and Length options are available only with options of corresponding type.		
Probe version/Material		
Probe exchangeable cable ø 4 mm (0.16 inch) with gravity weight/316[13)14)]	A	
Probe exchangeable cable ø 6 mm (0.24 inch) with gravity weight/316[13)14)]	B	
Probe exchangeable cable ø 6 mm (0.24 inch) with gravity weight/PA coated[15)]	C	
Probe exchangeable cable ø 11 mm (0.43 inch) with gravity weight/PA coated[15)]	D	
Probe exchangeable rod ø 16 mm (0.63 inch)/316L[13)]	E	
Process fitting/Material		
Thread G 3/4" (DIN 3852-A) PN 40/316L	0 0	
Thread 3/4" NPT (ASME B1.20.1) PN 40/316L	0 1	
Thread G 1" (DIN 3852-A) PN 40/316L	0 2	
Thread 1" NPT (ASME B1.20.1) PN 40/316L	0 3	
Thread G 1 1/2" (DIN 3852-A) PN 40/316L	0 4	
Thread 1 1/2" NPT (ASME B1.20.1) PN 40/316L	0 5	
Thread G 2" (DIN 3852-A) PN 40/316L	0 6	
Flange DN 50 PN 40 Form C, DIN 2501/316L	1 0	
Flange DN 80 PN 40 Form C, DIN 2501/316L	1 2	
Flange DN 100 PN 16 Form C, DIN 2501/316L	1 3	
Flange DN 100 PN 40 Form C, DIN 2501/316L	1 4	
Flange DN 150 PN 16 Form C, DIN 2501/316L	1 5	
Flange DN 50 PN 40 EN 1092-1 Form B1/316L	1 6	
Flange DN 80 PN 40 EN 1092-1 Form B1/316L	1 7	
Flange DN 100 PN 16 EN 1092-1 Form B1/316L	1 8	
Flange 2" 150 lb RF, ASME B16.5/316L	3 0	
Flange 2" 300 lb RF, ASME B16.5/316L	3 2	
Flange 3" 150 lb RF, ASME B16.5/316L	3 3	
Flange 3" 300 lb RF, ASME B16.5/316L	3 4	
Flange 4" 150 lb RF, ASME B16.5/316L	3 5	
Flange 4" 300 lb RF, ASME B16.5/316L	3 6	
Flange 6" 150 lb RF, ASME B16.5/316L	3 7	

© Siemens 2020

Selection and ordering data

SITRANS LG260 Guided radar level transmitter	Article No. 7ML5882-	Ord. code
Continuous, contact, 60 m (197 ft) range. Monitors level in solids.	■■■■■-■■■■	■■■
Electronics		
Two-wire 4 ... 20 mA/HART	0	
Four-wire Modbus[2)9)10)]	1	
Two-wire 4 ... 20 mA/HART with SIL qualification[9)]	2	
Four-wire 4 ... 20 mA/HART; 90 ... 253 V AC; 50/60 Hz[2)9)10)]	3	
Four-wire 4 ... 20 mA/HART; 9.6 ... 48 V DC; 20 ... 42 V AC[2)9)10)]	4	
PROFIBUS PA[9)]	5	
FOUNDATION Fieldbus[9)]	6	
Seal/Process temperature		
FKM (SHS FPM 70C3 GLT)/-40 ... +80 °C (-40 ... +176 °F)[16)]	A	
FKM (SHS FPM 70C3 GLT)/-40 ... +150 °C (-40 ... +302 °F)	B	
FFKM (Kalrez 6375)/-20 ... +200 °C (-4 ... +392 °F)	C	
EPDM (A+P 70.10-02)/-40 … +80 °C (-40 … +176 °F)[16)]	D	
EPDM (A+P 70.10-02)/-40 ... +150 °C (-40 ... +392 °F)	E	
Housing/Protection/Cable		
Note: for installation of remote display, 7ML5840, with LG two chamber housing options, contact PVC		
Plastic IP66/IP67 M20 x 1.5/ blind stopper[9)10)]	A	
Plastic IP66/IP67 1/2" NPT/blind stopper[9)10)]	B	
Plastic 2-chamber/IP66/IP67/M20 x 1.5/ blind stopper	C	
Plastic 2-chamber/IP66/IP67/ 1/2" NPT/ blind stopper	D	
Aluminum/IP66/IP68 (0.2 bar) M20 x 1.5/blind stopper[9)10)]	E	
Aluminum/IP66/IP68 (0.2 bar) 1/2" NPT/ blind stopper[9)10)]	F	
Aluminum double chamber/IP66/IP68 (0.2 bar) M20 x 1.5/blind stopper	G	
Aluminum double chamber/IP66/ IP68 (0.2 bar) 1/2" NPT/blind stopper	H	
Stainless Steel (precision casting) 316L/IP66/IP68 (0.2 bar) M20 x 1.5/ blind stopper[9)10)]	J	
Stainless steel (precision casting) 316L/IP66/IP68 (0.2 bar) 1/2" NPT/ blind stopper[9)10)]	K	
Stainless steel (electropolished) 316L/IP66/IP68 (0.2 bar) M20 x 1.5/ blind stopper[9)10)]	L	
Stainless steel (electropolished) 316L/IP66/IP68 (0.2 bar) 1/2" NPT/ blind stopper[9)10)]	M	
Stainless steel double chamber/IP66/IP68 (0.2 bar) M20 x 1.5/blind stopper	N	
Stainless steel double chamber/IP66/ IP68 (0.2 bar) 1/2" NPT/blind stopper	P	
Aluminum/IP66/IP68 (0.2 bar) M20 x 1.5/cable gland stainless steel[9)10)]	Q	
Aluminum double chamber/IP66/IP68 (0.2 bar) M20 x 1.5/cable gland stainless steel	R	
Stainless steel (precision casting) 316L/ IP66/ IP68 (0.2 bar) M20 x 1.5/cable gland stainless steel[9)10)]	S	
Stainless steel (electropolished) 316L/IP66/IP68 (0.2 bar) M20 x 1.5/ cable gland stainless steel[9)10)]	T	
Aluminum single chamber/IP66/IP68 (0.2 bar) M20 x 1.5/cable gland brass nickel-plated	W	
Aluminum double chamber/IP66/IP68 (0.2 bar) M20 x 1.5/cable gland brass nickel-plated	X	
Stainless steel single chamber (precision casting)/IP66/IP68 (0.2 bar) M20 x 1.5/cable gland brass nickel-plated	Y	
Stainless steel double chamber/IP66/IP68 (0.2 bar) M20 x 1.5/cable gland brass nickel-plated	U	
Remote stainless steel single chamber housing, electropolished/IP66/IP67 with cable outlet IP68 (electronics separated by cable); M20 x 1.5/blind plug[10)]	Z	Q 2 A
Remote plastic single chamber housing /IP66/IP67 with cable outlet IP68 (electronics separated by cable); M20 x 1.5/blind plug[10)]	Z	Q 2 B
Lengths		
Rod ø 16 mm/316L		
500 mm (19.69 inch)	0	
501 ... 1 000 mm (19.72 ... 39.37 inch)	1	
1 001 ... 2 000 mm (39.41 ... 78.74 inch)	2	
2 001 ... 3 000 mm (78.78 ... 118.11 inch)	3	
3 001 ... 4 000 mm (118.15 ... 157.48 inch)	4	
4 001 ... 5 000 mm (157.52 ... 196.85 inch)	5	
5 001 ... 6 000 mm (196.89 ... 236.22 inch)	6	
Cable lengths ø 4 mm/316		
501 ... 1 000 mm (19.72 ... 39.37 inch)	9	R 2 E
1 001 ... 5 000 mm (39.41 ... 196.85 inch)	9	R 2 F
5 001 ... 10 000 mm (196.89 ... 393.70 inch)	9	R 2 G
10 001 ... 15 000 mm (393.74 ... 590.55 inch)	9	R 2 H
15 001 ... 20 000 mm (590.59 ... 787.40 inch)	9	R 2 J
20 001 ... 25 000 mm (787.44 ... 984.25 inch)	9	R 2 K
25 001 ... 30 000 mm (984.29 ... 1 181.10 inch)	9	R 2 L
30 001 ... 35 000 mm (1 181.14 ... 1 377.95 inch)	9	R 2 M
35 001 ... 40 000 mm (1 377.99 ... 1 574.80 inch)	9	R 2 N
40 001 ... 45 000 mm (1 574.84 ... 1 771.65 inch)	9	R 2 P
45 001 ... 50 000 mm (1 771.69 ... 1 968.50 inch)	9	R 2 Q
50 001 ... 55 000 mm (1 968.54 ... 2 165.35 inch)	9	R 2 R
55 001 ... 60 000 mm (2 165.39 ... 2 362.20 inch)	9	R 2 S

© Siemens 2020

Selection and ordering data

	Article No.													Order code
SITRANS LG260 Guided radar level transmitter	**7ML5882-**												Ord. code	
Continuous, contact, 60 m (197 ft) range. Monitors level in solids.	■	■	■	■	■	-	■	■	■	■		■	■	
Cable lengths ø 6 mm/316L														
500 mm (19.69 inch)										9		R	4 A	
501 ... 1 000 mm (19.72 ... 39.37 inch)										9		R	4 B	
1 001 ... 5 000 mm (39.41 ... 196.85 inch)										9		R	4 C	
5 001 ... 10 000 mm (196.89 ... 393.70 inch)										9		R	4 D	
10 001 ... 15 000 mm (393.74 ... 590.55 inch)										9		R	4 E	
15 001 ... 20 000 mm (590.59 ... 787.40 inch)										9		R	4 F	
20 001 ... 25 000 mm (787.44 ... 984.25 inch)										9		R	4 G	
25 001 ... 30 000 mm (984.29 ... 1 181.10 inch)										9		R	4 H	
30 001 ... 35 000 mm (1 181.14 ... 1 377.95 inch)										9		R	4 J	
35 001 ... 40 000 mm (1 377.99 ... 1 574.80 inch)										9		R	4 K	
40 001 ... 45 000 mm (1 574.84 ... 1 771.65 inch)										9		R	4 L	
45 001 ... 50 000 mm (1 771.69 ... 1 968.50 inch)										9		R	4 M	
50 001 ... 55 000 mm (1 968.54 ... 2 165.35 inch)										9		R	4 N	
55 001 ... 60 000 mm (2 165.39 ... 2 362.20 inch)										9		R	4 P	
Cable lengths ø 6 mm or ø 11 mm/PA coated														
501 ... 1 000 mm (19.72 ... 39.37 inch)										9		R	6 A	
1 001 ... 5 000 mm (39.41 ... 196.85 inch)										9		R	6 B	
5 001 ... 10 000 mm (196.89 ... 393.70 inch)										9		R	6 C	
10 001 ... 15 000 mm (393.74 ... 590.55 inch)										9		R	6 D	
15 001 ... 20 000 mm (590.59 ... 787.40 inch)										9		R	6 E	
20 001 ... 25 000 mm (787.44 ... 984.25 inch)										9		R	6 F	
25 001 ... 30 000 mm (984.29 ... 1 181.10 inch)										9		R	6 G	
30 001 ... 35 000 mm (1 181.14 ... 1 377.95 inch)										9		R	6 H	
35 001 ... 40 000 mm (1 377.99 ... 1 574.80 inch)										9		R	6 J	
40 001 ... 45 000 mm (1 574.84 ... 1 771.65 inch)										9		R	6 K	
45 001 ... 50 000 mm (1 771.69 ... 1 968.50 inch)										9		R	6 L	
50 001 ... 55 000 mm (1 968.54 ... 2 165.35 inch)										9		R	6 M	
55 001 ... 65 000 mm (2 165.39 ... 2 559.06 inch)										9		R	6 N	

	Order code
Further designs (mandatory)	
Please add "**-Z**" to Article No. and specify Order code(s).	
Supplementary electronics	
Without	**A00**
Additional current output 4 ... 20 mA[10)]	**A01**
Rod mounted	
Without Rod, applicable for coax or cable probe types only	**C00**
Mounted	**C01**
Not mounted	**C02**
Indicating/adjustment module	
Without	**E00**
Mounted	**E01**
Laterally mounted	**E02**
Language of display	
German	**L00**
English	**L01**
French	**L02**
Dutch	**L03**
Italian	**L04**
Spanish	**L05**
Portuguese	**L06**
Russian	**L07**
Chinese	**L08**
Japanese	**L09**
Operating instructions	
German	**M00**
English	**M01**
French	**M02**
Spanish	**M03**
Further designs (optional)	
Please add "**-Z**" to Article No. and specify Order code(s).	
Enter the total insertion length in plain text description	**Y01**
Remote electronic cable lengths: 2 m (6.6 ft). Only available with Housing options Q2A and Q2B.	**Y10**
Remote electronic cable lengths: 5 m (16.4 ft). Only available with Housing options Q2A and Q2B.	**Y11**
Remote electronic cable lengths: 10 m (32.8 ft). Only available with Housing options Q2A and Q2B.	**Y12**
Identification Label (measurement loop) stainless steel, 40 characters max, add in plain text. To add more than one line use a coma "," for line break.	**Y17**
Identification Label (measurement loop) foil, 40 characters max, add in plain text. To add more than one line use a coma "," for line break.	**Y18**

© Siemens 2020

Selection and ordering data	Order code
Material Inspection certificate 3.1 of EN 10204	**C05**
3.1-Inspection Certificate for instrument (EN 10204)[17]	**C12**
Inspection certificate 3.1 (EN 10204, NACE MR 0175) - material.[17][18] Note: 316L probes include NACE MR 0175 and MR 0103, non 316L probes include MR 0175 only and plated flange designs are not available with NACE certificate.	**D07**
3.1-Inspection Certificate for instrument with test data (EN 10204)[17]	**C25**
2.2-Factory certificate for material (EN 10204)[17]	**C15**
Quality and test plan[17]	**C26**
Dye penetration test, results confirmed via a 3.1 certificate/instrument (EN10204)[17]	**C13**
X-ray test + 3.1 certificate/instrument[17]	**C14**
Positive material identification test + 3.1 certificate/instrument[17]	**C16**
Roughness test + 3.1 certificate/instrument[17]	**C18**
Pressure test + 3.1 certificate/instrument[17]	**C31**
Helium leak test + 3.1 certificate/instrument[17]	**C32**
Pressure test according to Norsok + 3.1 certificate/instrument[17]	**C61**
5 point calibration certificate (min. length 500 mm)[17]	**C62**
Operating Instructions	
All literature is available to download for free, in a range of languages, at	

http://www.siemens.com/processinstrumentation/documentation

Accessories	Article No.
SITRANS LG, GWR sensor Display Module	**A5E34143449**
SITRANS LG, two-wire 4 ... 20 mA/HART electronic	**A5E35637821**
SITRANS LG, USB communicator	**A5E35192015**
SITRANS LG, Mounting eye M12 x 20	**PBD:51041448**
SITRANS LG, Mounting spring	**PBD:51041449**
Siemens Intrinsically Safe Barrier (DC powered), ATEX II 1 G EEx ia	**7NG4124-0AA00**
SITRANS RD100, loop powered display - see Chapter 7	**7ML5741-.....-.**
SITRANS RD150, remote digital display for 4 ... 20 mA and HART devices - see Chapter 7	**7ML5742-.....-....**
SITRANS RD200, universal input display with Modbus conversion - see Chapter 7	**7ML5740-.....-..**
SITRANS RD300, dual line display with totalizer and linearization curve and Modbus conversion - see Chapter 7	**7ML5744-.....-..**
For applicable back up point level switch - see point level measurement section	

Note: some configuration options are not available.
For restriction information see the online PIA configuration tool.

1) Not available with Plastic and Stainless steel (electropolished) Housing/Protection/Cable options and certain glands.
2) Available only with Double chamber, Metallic Housing/Protection/Cable options and certain glands.
3) Not available with Remote and Stainless steel (electropolished) Housing/Protection/Cable options and certain glands.
4) Not available with Stainless steel (electropolished) Housing/Protection/Cable options and certain glands.
5) Not available with Seal/Process temperature option C.
6) Not available with Housing/Protection/Cable options W, X, Y, and U.
7) Not available with Probe version/Material option E.
8) Available only with certain Electronics options.
9) Available only with Supplementary electronic option A00.
10) Not available with Indicating/adjustment module option E02.
11) Not available with Seal/Process temperature options B and E.
12) Available only with Seal/Process temperature option C.
13) Not available with Seal/Process temperature options A and D.
14) Available only with Rod mounted option C00.
15) Available only with Seal/Process temperature options A and D.
16) Not available with Housing/Protection/Cable options Q2A and Q2B.
17) Listed Certificates are not available with all configurations, please contact factory for more information.
18) Available only with 316L Probes. NACE is not available with coated, plated, or hygienic connections.
19) Available only with Single chamber, Aluminum and Stainless steel (precision casting) Housing/Protection/Cable options.

Note: Please consult manual for further details.

© Siemens 2020

Selection and ordering data

	Article No.	
SITRANS LG270 Guided radar level transmitter ↗	**7ML5883-**	Ord. code
Continuous, contact, 60 m (197 ft) range. Monitors level and interface in liquids in extreme environments.	■ ■ ■ ■ ■ - ■ ■ ■ ■	■ ■ ■
↗ Click on the Article No. for the online configuration in the PIA Life Cycle Portal.		
Approvals		
General purpose (CSA, FM, CE)[32]	0 A	
Shipping approval[1)2)3)4)5)]	0 B	
Overfill protection (WHG; VLAREM)[2)3)]	0 C	
ATEX II 1G, 1/2G, 2G Ex ia IIC T6[2)32)]	0 E	
ATEX II 1G, 1/2G, 2G Ex ia IIC + Overfill (WHG; VLAREM)[2)3)]	0 F	
ATEX II 1G, 1/2G, 2G Ex ia IIC T6 + shipping approval[1)2)3)4)5)]	0 G	
ATEX II 1G,1/2G 2G Ex ia IIC + ATEX II 1D, 1/2D, 2D IP6x[2)7)]	0 H	
ATEX II 1/2G, 2G Ex d ia IIC T6[2)5)6)8)32)]	0 J	
ATEX II 1/2G, 2G Ex d ia IIC + shipping approval[1)2)3)5)6)8)]	0 L	
ATEX II 1/2G, 2G Ex d ia IIC + ATEX II 1/2D, 2D IP6x[2)5)6)8)]	0 M	
ATEX II 1/2G, 2G Ex d IIC T6[6)7)32)]	0 N	
ATEX II 1G, II 1/2G, II 2G Ex ia IIC T6 ... T1 Ga, Ga/Gb, Gb /IEC Ex ia IIC T6 ... T1 Ga, Ga/Gb, Gb[2)3)]	0 W	
ATEX II 1/2G, 2G Ex d IIC + ship approval[1)2)3)5)6)7)]	0 Q	
ATEX II 1/2G, 2G Ex d IIC + ATEX II 1/2D, 2D IP6x[2)6)7)]	0 R	
ATEX II 1D, 1/2D, 2D IP6x T[2)7)]	0 S	
ATEX II 1/2G, II 2G Ex db IIC T6 ... T1 Ga/Gb, Gb + Overfill protection (WHG, VLAREM)[6)7)32)]	7 P	
IEC Ex ia IIC T6[2)]	0 T	
IEC Ex ia IIC T6 + IEC IP6x T tD[2)7)32)]	0 U	
IEC Ex d ia IIC T6[2)5)6)8)32)]	1 A	
IEC Ex d ia IIC T6 + IEC IP6x T tD[2)5)6)8)]	1 B	
IEC Ex d IIC T6[3)6)7)]	1 C	
IEC Ex d IIC T6 + IEC IP6x T tD[2)3)6)7)]	1 D	
IEC Ex db IIC T6 ... T1 Ga/Gb, Gb + Ship approval[2)3)5)6)7)9)]	7 C	
IEC Ex ia IIC T6 ... T1 Ga, Ga/Gb, Gb + Ship approval[2)9)12)]	7 D	
IEC Ex d ia IIC T6 ... T1 Ga/Gb, Gb + Ship approval[2)5)6)8)9)]	7 E	
FM (NI) Class I, Div. 2, Groups A, B, C, D[2)5)10)32)]	1 F	
FM (NI) Class I, Div. 2, Groups A, B, C, D + ship approval[1)2)3)5)8)]	1 G	
FM (IS) Class I, II, III, Div. 1, Groups A, B, C, D, E, F[2)5)32)]	1 H	
FM (IS) Class I, II, III, Div. 1, Groups A, B, C, D, E, F, G + ship approval[1)2)3)4)5)]	1 J	
FM (XP-AIS) Class I, II, III, Div. 1, Groups A, B, C, D, E, F, G[2)5)6)8)32)]	1 K	
FM (XP-AIS) Class I, II, III, Div. 1, Groups A, B, C, D, E, F, G + shipping approval[1)2)3)5)6)8)]	1 L	
FM (XP) Class I, Div. 1, Groups A, B, C, D[6)11)32)]	1 M	
CSA (NI) Class I, Div. 2, Groups A, B, C, D; (DIP) Class II, III, Div. 1, Groups E, F, G[3)6)7)]	1 N	
CSA (IS) Class I, II, III, Div. 1, Groups A, B, C, D, E, F, G[2)3)]	1 P	
CSA (XP-IS) Class I, II, III, Div. 1, Groups A, B, C, D, E, F, G[2)3)5)6)8)]	1 Q	
CSA (XP) Class I, II, III, Div. 1, Groups A, B, C, D, E, F, G[3)5)6)11)19)]	1 R	
CSA (NI) Class I, II, III Div. 2, Groups A, B, C, D, F, G + Ship approval[2)3)6)7)9)]	7 K	

	Article No.	
SITRANS LG270 Guided radar level transmitter	**7ML5883-**	Ord. code
Continuous, contact, 60 m (197 ft) range. Monitors level and interface in liquids in extreme environments.	■ ■ ■ ■ ■ - ■ ■ ■ ■	■ ■ ■
CSA (IS) Class I, II, III, Div. 1, Groups A, B, C, D, E, F, G + Ship approval[2)6)9)12)]	7 L	
CSA (XP-IS) Class I, II, III, Div. 1, Groups A, B, C, D, E, F, G + Ship approval[2)3)5)6)8)9)]	7 M	
NEPSI Ex ia IIC T6[2)3)]	2 A	
NEPSI Ex ia IIC T6 + DIP A20/21 TA T*[2)5)7)]	2 B	
NERSI Ex d ia IIC T6[2)3)5)6)8)]	2 C	
NEPSI Ex d ia IIC T6 + DIP A20/21 TA T* [2)3)5)6)8)]	2 D	
NEPSI Ex d IIC T6[2)3)6)11)]	2 E	
NEPSI Ex d IIC T6 + DIP A20/21 TA T* [2)3)6)11)]	2 F	
NEPSI DIP A20/21 TA T*[2)3)7)]	2 G	
INMETRO Ex ia IIC T6 ... T1[2)32)]	3 A	
INMETRO Ex t IIIC T* IP6X, Da, Da/Db, Da/Dc, Db + Ex ia IIC T6, Ga, Ga/Gb[2)6)7)]	3 B	
INMETRO Ex d ia IIC T6 ... T1[2)5)6)8)32)]	3 C	
INMETRO Ex t IIIC T* IP6X, Da, Da/Db, Da/Dc, Db + Ex d ia IIC T6 Ga/Gb[2)5)68)]	3 D	
INMETRO Ex d IIC T6 ... T1[2)6)11)32)]	3 E	
INMETRO Ex t IIIC T* IP6X, Da, Da/Db, Da/Dc, Db + Ex d IIC T6 Ga/Gb[2)6)11)]	3 F	
INMETRO Ex t IIIC T* IP6X, Da, Da/Db, Da/Dc, Db[2)6)7)]	3 G	
KOSHA Ex d IIC T6 ... T1 – KE[2)3)6)11)]	4 A	
Korea KC ex free area[2)32)]	6 A	
GOST-R/EAC 0 Ex ia IIC T1 ... T6 X[2)3)13)]	5 A	
GOST-R/EAC 0 Ex ia IIC T1 ... T6 X + Ex t IIIC T ... IP66[2)3)7)]	5 B	
GOST-R/EAC 1 Ex d ia IIC T1 ... T6 X[2)3)5)6)8)]	5 C	
GOST-R/EAC 1 Ex d ia IIC T1 ... T6 X + Ex t IIIC T ... IP66[2)3)5)6)8)]	5 D	
GOST-R/EAC 1 Ex d IIC T1 ... T6 X[2)3)6)11)]	5 E	
GOST-R/EAC 0 Ex d IIC T1 ... T6 X + Ex t IIIC T ... IP66[2)3)6)11)]	5 F	
GOST-R/EAC Ex t IIIC T ... IP66[2)3)14)]	5 G	
Note: Version/Material, Process fitting/ Material, and Length options are available only with options of corresponding type.		
Version/Material		
Probe exchangeable cable ø 2 mm (0.08 inch) with gravity weight/316[15)16)17)]	A	
Probe exchangeable cable ø 2 mm (0.08 inch) center weight/316L[15)17)18)]	B	
Probe exchangeable cable ø 4 mm (0.16 inch) with gravity weight/316L[15)16)17)]	C	
Probe exchangeable cable ø 4 mm (0.16 inch) with center weight/316L[15)17)18)]	D	
Probe exchangeable rod ø 16 mm (0.63 inch)/316L[16)19)20)]	E	
Probe coax version ø 42.2 mm (1.66 inch) with multiple hole/316L[16)17)20)]	F	
Probe coax version ø 42.2 mm (1.66 inch); multiple hole; reference distances/316L[16)17)20)21)26)]	G	
Probe exchangeable cable ø 4 mm (0.16 inch) with gravity weight/ Alloy C22 (2.4602)[22)30)]	H	
Probe exchangeable rod ø 16 mm (0.63 inch)/Alloy C22 (2.4602)[22)30)]	J	
Coax version ø 42.2 mm (1.66 inch) with multiple hole/Alloy C22 (2.4602)[22)30)]	K	
Exchangeable rod, diameter 8 mm (0.32 inch)/316L[19)23)]	L	
Coax ø 21.3 mm (0.838 inch) with multiple hole/316L[23)]	M	

© Siemens 2020

Selection and ordering data

	Article No.	
SITRANS LG270 Guided radar level transmitter Continuous, contact, 60 m (197 ft) range. Monitors level and interface in liquids in extreme environments.	**7ML5883-** ■■■■■ - ■■■■	Ord. code ■■■
Process fitting/Material		
Thread G 1 1/2" (DIN 3852-A) PN 400/316L[20)]	0 0	
Thread 1 1/2" NPT (ASME B1.20.1) PN 400/316L[20)]	0 1	
Thread G1 1/2" PN 400, DIN 3852-A/ Alloy C22 (2.4602)	0 2	
Thread 1 1/2" NPT PN 400, ASME B1.20.1/ Alloy C22 (2.4602)	0 3	
Flange DN 50 PN 40 Form C, DIN 2501/ 316L with Alloy C22 (2.4602) coating	0 4	
Flange DN 80 PN 40 Form C, DIN 2501/ 316L with Alloy C22 (2.4602) coating	0 5	
Flange DN 100 PN 16 Form C, DIN 2501/ 316L with Alloy C22 (2.4602) coating	0 6	
Flange DN 50 PN 40 Form B1, EN 1092-1/ 316L with Alloy C22 (2.4602) coating	0 7	
Flange DN 50 PN 63 Form B1, EN 1092-1/ 316L with Alloy C22	0 8	
Flange DN 50 PN 40 Form C, DIN 2501/316L	1 0	
Flange DN 50 PN 40 form V13, DIN 2513/316L	1 1	
Flange DN 65 PN 64 Form V13, DIN 2501/316L	1 2	
Flange DN 80 PN 40 Form C, DIN 2501/316L	1 3	
Flange DN 80 PN 40 Form V13, DIN 2501/316L	1 4	
Flange DN 80 PN 100 Form L, DIN 2501/316L[20)]	1 5	
Flange DN 100 PN 16 Form C, DIN 2501/316L	1 6	
Flange DN 100 PN 16 Form V13, DIN 2501/316L	1 7	
Flange DN 100 PN 40 Form C, DIN 2501/316L	1 8	
Flange DN 100 PN 40 Form V13, DIN 2513/316L	2 0	
Flange DN 150 PN 16 Form C, DIN 2501/316L	2 1	
Flange DN 50 PN 40 EN 1092-1 Form B1/316L	2 2	
Flange DN 100 PN 160 GOST 12815-80.7/ 316L[20)]	2 3	
Flange 2" 150 lb RF, ASME B16.5/316L with Alloy C22 (2.4602) coating	2 4	
Flange 2" 300 lb RF, ASME B16.5/316L with Alloy C22 (2.4602) coating	2 5	
Flange 2" 600 lb RF, ASME B16.5/316L with Alloy C22 (2.4602) coating	2 6	
Flange 3" 150 lb RF, ASME B16.5/316L with Alloy C22 (2.4602) coating	2 7	
Flange 3" 300 lb RF, ASME B16.5/316L with Alloy C22 (2.4602) coating	2 8	
Flange DN 80 PN 160 Form C, DIN 2501/316L[20)]	6 0	
Flange DN 80 PN 250 Form L, DIN 2501/316L[20)]	6 1	
Flange DN 50 PN 160, EN 1092-1 Form B1/316L[20)]	6 2	
Flange DN 50 PN 160, EN 1092-1 Form B2/316L[20)]	6 3	
Flange DN 50 PN 32, EN 1092-1 Form B1/316L[20)]	6 4	
Flange DN 65 PN 250, EN 1092-1 Form B1/316L[20)]	6 5	
Flange DN 100 PN 160, EN 1092-1 Form B2/316L[20)]	6 6	
Flange DN 80 PN 63, EN 1092-1 Form B2/316L	6 7	
Flange 4" 600 lb RF, ASME B16.5/ 316L with Alloy C22 (2.4602) coating	6 8	

	Article No.	
SITRANS LG270 Guided radar level transmitter Continuous, contact, 60 m (197 ft) range. Monitors level and interface in liquids in extreme environments.	**7ML5883-** ■■■■■ - ■■■■	Ord. code ■■■
Flange 2" 150 lb RF, ASME B16.5/316L	3 0	
Flange 2" 300 lb RF, ASME B16.5/316L	3 1	
Flange 2" 600 lb RF, ASME B16.5/316L	3 2	
Flange 2" 1 500 lb RF, ASME B16.5/316L	3 3	
Flange 3" 150 lb RF, ASME B16.5/316L	3 4	
Flange 3" 300 lb RF, ASME B16.5/316L	3 5	
Flange 3" 600 lb RF, ASME B16.5/316L	3 6	
Flange 3" 900 lb RF, ASME B16.5/316L	3 7	
Flange 3" 2 500 lb RF, ASME B16.5/316L	3 8	
Flange 3 1/2" 600 lb RF, ASME B16.5/316L	4 0	
Flange 4" 150 lb RF, ASME B16.5/316L	4 1	
Flange 4" 300 lb RF, ASME B16.5/316L	4 2	
Flange 4" 600 lb RF, ASME B16.5/316L	4 3	
Flange 6" 150 lb RF, ASME B16.5/316L	4 4	
Flange 6" 300 lb RF, ASME B16.5/316L	4 5	
Flange 6" 600 lb RF, ASME B16.5/316L	4 6	
Flange 2" 150 lb Fisher special return/316L	4 7	
Flange 3" 900 lb RJF, ASME B16.5/ Alloy C22 (2.4602)	4 8	
Flange 2" 900 lb RF, ASME B16.5/316L	5 0	
Flange 3" 1 500 lb RF, ASME B16.5/316L	5 1	
Flange 4" 900 lb RF, ASME B16.5/316L	5 2	
Flange 4" 1 500 lb RF, ASME B16.5/316L	5 3	
Flange 4" 2 500 lb RJF, ASME B16.5/316L[20)]	5 4	
Flange 4" 1500 lb RJF, ASME B16.5/316L[20)]	5 5	
Flange 3" 600 lb RF, ASME B16.5/316L with Alloy C22 (2.4602) coating	5 6	
Flange 4" 150 lb RF, ASME B16.5/316L with Alloy C22 (2.4602) coating	5 7	
Flange 4" 300 lb RF, ASME B16.5/316L with Alloy C22 (2.4602) coating	5 8	
Flange 6" 150 lb RF, ASME B16.5/316L with Alloy C22 (2.4602) coating	7 0	
Flange DN 50 PN 40 Form C, DIN 2501/Alloy C22 (2.4602) solid	7 1	
Flange DN 100 PN 16 Form C, DIN 2501/C22 solid	7 2	
Flange DN 100 PN 40 Form N, DIN 2501/Alloy C22 (2.4602) solid	7 3	
Flange DN 50 PN 40 Form B1, EN 1092-1/Alloy C22 (2.4602) solid	7 4	
Flange 2" 150 lb RF, ASME B16.5/ Alloy C22 (2.4602) solid	7 5	
Flange 2" 300 lb RF, ASME B16.5/ Alloy C22 (2.4602) solid	7 6	
Flange 2" 600 lb RF, ASME B16.5/ Alloy C22 (2.4602) solid	7 7	
Flange 2" 900 lb RJF, ASME B16.5/ Alloy C22 (2.4602) solid	7 8	
Flange 2" 1 500 lb RJF, ASME B16.5/ Alloy C22 (2.4602) solid	8 0	
Flange 3" 150 lb RF, ASME B16.5/ Alloy C22 (2.4602) solid	8 1	
Flange 3" 300 lb RF, ASME B16.5/ Alloy C22 (2.4602) solid	8 2	
Flange 3" 600 lb RF, ASME B16.5/ Alloy C22 (2.4602) solid	8 3	
Flange 4" 150 lb RF, ASME B16.5/ Alloy C22 (2.4602) solid	8 4	
Flange 4" 300 lb RF, ASME B16.5/ Alloy C22 (2.4602) solid	8 5	
Flange 3" 600 lb RJF for R31, ASME B16.5/ Alloy C22 (2.4602) solid	8 6	

© Siemens 2020

Selection and ordering data

	Article No.	
SITRANS LG270 Guided radar level transmitter	**7ML5883-**	Ord. code
Continuous, contact, 60 m (197 ft) range. Monitors level and interface in liquids in extreme environments.	■■■■■ - ■■■■	■■■
Flange 2" 2 500 lb RJF, ASME B16.5/ Alloy C22 (2.4602) solid	9 0	L 1 A
Flange 3" 1 500 lb RJF, ASME B16.5/ Alloy C22 (2.4602) solid	9 0	L 1 B
Flange 3" 2 500 lb RJF, ASME B16.5/ Alloy C22 (2.4602) solid	9 0	L 1 C
Flange 4" 600 lb RF, ASME B16.5/ Alloy C22 (2.4602) solid	9 0	L 1 D
Flange 4" 600 lb RJF, ASME B16.5/ Alloy C22 (2.4602) solid	9 0	L 1 E
Flange 4" 900 lb RF, ASME B16.5/ Alloy C22 (2.4602) solid	9 0	L 1 F
Flange 4" 900 lb RJF, ASME B16.5/ Alloy C22 (2.4602) massiv	9 0	L 1 G
Flange 4" 1 500 lb RJF, ASME B16.5/ Alloy C22 (2.4602) solid	9 0	L 1 H
Flange 4" 2 500 lb RJF, ASME B16.5/ Alloy C22 (2.4602) solid	9 0	L 1 J
Flange 8" 300 lb RF, ASME B16.5/ Alloy C22 (2.4602) solid	9 0	L 1 K
Flange 3½" 600 lb Fisher type 249B and 259B/Alloy C22 (2.4602) solid	9 0	L 1 L
Flange 2½" 300 lb RF, ASME B16.5/316/316L	9 0	L 2 A
Flange 2½" 600 lb RF, ASME B16.5/316/316L	9 0	L 2 B
Flange DN 50 PN 40 Form D, EN 1092-1/316/316L[24)]	9 0	L 2 C
Flange 2½" 1 500 lb RF, ASME B16.5/316/316L	9 0	L 2 D
Flange 2" 600 lb RF, ASME B16.5/316L (Norsok)[34)35)]	9 0	L 2 E
Thread G 1" (DIN 3852-A) PN 100/316L	9 0	L 3 C
Thread 1" NPT, ASME B1.20.1/PN 100/316L	9 0	L 3 D
Thread G 1½" (DIN 3852-A) PN 100/316L	9 0	L 3 E
Thread 1½" NPT, ASME B1.20.1/PN 100/316L	9 0	L 3 F
Thread 2" NPT, ASME B1.20.1/PN 100/316L	9 0	L 3 G
Thread G ¾ PN100, DIN 3852-A/316L[31)]	9 0	L 3 H
Thread ¾ NPT PN100, ASME B1.20.1/31[31)]	9 0	L 3 J
Electronics		
Two-wire 4 ... 20 mA/HART	0	
Four-wire Modbus[5)6)8)]	1	
Two-wire 4 ... 20 mA/HART with SIL qualification[5)]	2	
Four-wire 4 ... 20 mA/HART; 90 ... 253 V AC; 50/60 Hz[5)6)8)]	3	
Four-wire 4 ... 20 mA/HART; 9.6 ... 48 V DC; 20 ... 42 V AC[5)6)8)]	4	
PROFIBUS PA[5)]	5	
FOUNDATION Fieldbus[5)]	6	
Seal/Second line of defense/ Process temperature		
Ceramic-graphite/with glass seal/ -196 ... +280 °C (-321 ... +536 °F)	A	
Ceramic-graphite/with glass seal/ -196 ... +450 °C (-321 ... +842 °F)	B	
Ceramic-graphite/with glass seal/ -196 ... +400 °C (-321 ... +752 °F)[21)]	C	
PEEK-FFKM (Kalrez 6375) /with glass seal/ -20...+250 °C (-4 ... +482 °F)[21)]	D	

	Article No.	
SITRANS LG270 Guided radar level transmitter	**7ML5883-**	Ord. code
Continuous, contact, 60 m (197 ft) range. Monitors level and interface in liquids in extreme environments.	■■■■■ - ■■■■	■■■
Housing/Protection/Cable		
Note: for installation of remote display, 7ML5840, with LG two chamber housing options, contact PVC		
Plastic IP66/IP67 M20 x 1.5/blind stopper	A	
Plastic IP66/IP67 1/2" NPT/blind stopper	B	
Aluminum/IP66/IP68 (0.2 bar) M20 x 1.5/blind stopper	C	
Aluminum/IP66/IP68 (0.2 bar) 1/2" NPT/ blind stopper	D	
Aluminum double chamber/IP66/IP68 (0.2 bar) M20 x 1.5/blind stopper	E	
Aluminum double chamber/IP66/IP68 (0.2 bar) 1/2" NPT/blind stopper	F	
Stainless steel (precision casting) 316L/IP66/IP68 (0.2 bar) M20 x 1.5/ blind stopper	L	
Stainless steel (precision casting) 316L/IP66/IP68 (0.2 bar) 1/2" NPT/ blind stopper	M	
Stainless steel (electropolished) 316L/IP66/IP68 (0.2 bar) M20 x 1.5/ blind stopper	N	
Stainless steel (electropolished) 316L/IP66/IP68 (0.2 bar) 1/2" NPT/ blind stopper	P	
Stainless steel double chamber/IP66/IP68 (0.2 bar) M20 x 1.5/blind stopper	Q	
Stainless steel double chamber/IP66/IP68 (0.2 bar) 1/2" NPT/blind stopper	R	
Aluminum/IP66/IP68 (0.2 bar) M20 x 1.5/cable gland stainless steel	S	
Aluminum double chamber/IP66/IP68 (0.2 bar) M20 x 1.5/cable gland stainless steel	T	
Stainless steel (precision casting) 316L/IP66/IP68 (0.2 bar) M20 x 1.5/cable gland stainless steel	U	
Stainless steel (electropolished) 316L/IP66/IP68 (0.2 bar) M20 x 1.5/cable gland stainless steel	V	
Aluminum single chamber/IP66/IP68 (0.2 bar) M20 x 1.5/cable gland brass nickel-plated	W	
Aluminum double chamber/IP66/IP68 (0.2 bar) M20 x 1.5/cable gland brass nickel-plated	X	
Stainless steel single chamber (precision casting)/IP66/IP68 (0.2 bar) M20 x 1.5/cable gland brass nickel-plated	Y	
Stainless steel double chamber/IP66/IP68 (0.2 bar) M20 x 1.5/cable gland brass nickel-plated	J	
Remote stainless steel single chamber housing, electropolished/IP66/IP67 with cable outlet IP68 (electronics separated by cable); M20 x 1.5/blind plug[6)]	Z	Q 2 A
Remote plastic single chamber housing /IP66/IP67 with cable outlet IP68 (electronics separated by cable); M20 x 1.5/blind plug[6)]	Z	Q 2 B

© Siemens 2020

Selection and ordering data

SITRANS LG270 Guided radar level transmitter	Article No. 7ML5883-	Ord. code
Continuous, contact, 60 m (197 ft) range. Monitors level and interface in liquids in extreme environments.	■■■■■ - ■■■■	■■■
Lengths		
Rod ø 16 mm/316L		
300 mm (11.81 inch)[25]	0	
500 mm (19.69 inch)[25]	1	
501 ... 1 000 mm (19.72 ... 39.37 inch)[25]	2	
1 001 ... 2 000 mm (39.41 ... 78.74 inch)[25]	3	
2 001 ... 3 000 mm (78.78 ... 118.11 inch)[25]	4	
3 001 ... 4 000 mm (118.15 ... 157.48 inch)[25]	5	
4 001 ... 5 000 mm (157.52 ... 196.85 inch)[25]	6	
5 001 ... 6 000 mm (196.89 ... 236.22 inch)[25]	7	
Rod ø 16 mm/C22		
501 ... 1 000 mm (19.72 ... 39.37 inch)[25]	9	R 1 A
1 001 ... 2 000 mm (39.41 ... 78.74 inch)[25]	9	R 1 B
2 001 ... 3 000 mm (78.78 ... 118.11 inch)[25]	9	R 1 C
3 001 ... 4 000 mm (118.15 ... 157.48 inch)[25]	9	R 1 D
4 001 ... 5 000 mm (157.52 ... 196.85 inch)[25]	9	R 1 E
5 001 ... 6 000 mm (196.89 ... 236.22 inch)[25]	9	R 1 F
Rod ø 8 mm/316L		
300 ... 1 000 mm (11.81 ... 39.37 inch)	9	R 1 H
1 001 ... 2 000 mm (39.41 ... 78.74 inch)	9	R 1 J
2 001 ... 3 000 mm (78.78 ... 118.11 inch)	9	R 1 K
3 001 ... 4 000 mm (118.15 ... 157.48 inch)	9	R 1 L
4 001 ... 5 000 mm (157.52 ... 196.85 inch)	9	R 1 M
5 001 ... 6 000 mm (196.89 ... 236.22 inch)	9	R 1 N
Cable lengths ø 2 or 4 mm/316L		
501 ... 1 000 mm (19.72 ... 39.37 inch)	9	R 2 E
1 000 ... 5 000 mm (39.37 ... 196.85 inch)	9	R 2 F
5 001 ... 10 000 mm (196.89 ... 393.70 inch)	9	R 2 G
10 001 ... 15 000 mm (393.74 ... 590.55 inch)	9	R 2 H
15 001 ... 20 000 mm (590.59 ... 787.40 inch)	9	R 2 J
20 001 ... 25 000 mm (787.44 ... 984.25 inch)	9	R 2 K
25 001 ... 30 000 mm (984.29 ... 1 181.10 inch)	9	R 2 L
30 001 ... 35 000 mm (1 181.14 ... 1 377.95 inch)	9	R 2 M
35 001 ... 40 000 mm (1 377.99 ... 1 574.80 inch)	9	R 2 N
40 001 ... 45 000 mm (1 574.84 ... 1 771.65 inch)	9	R 2 P
45 001 ... 50 000 mm (1 771.69 ... 1 968.50 inch)	9	R 2 Q
50 001 ... 55 000 mm (1 968.54 ... 2 165.35 inch)	9	R 2 R
55 001 ... 60 000 mm (2 165.39 ... 2 362.20 inch)	9	R 2 S

SITRANS LG270 Guided radar level transmitter	Article No. 7ML5883-	Ord. code
Continuous, contact, 60 m (197 ft) range. Monitors level and interface in liquids in extreme environments.	■■■■■ - ■■■■	■■■
Cable lengths ø 4 mm/ C22		
501 ... 1 000 m (19.72 ... 39.37 inch)	9	R 4 A
1 000 ... 5 000 mm (39.37 ... 196.85 inch)	9	R 4 B
5 001 ... 10 000 mm (196.89 ... 393.70 inch)	9	R 4 C
10 001 ... 15 000 mm (393.74 ... 590.55 inch)	9	R 4 D
15 001 ... 20 000 mm (590.59 ... 787.40 inch)	9	R 4 E
20 001 ... 25 000 mm (787.44 ... 984.25 inch)	9	R 4 F
25 001 ... 30 000 mm (984.29 ... 1 181.10 inch)	9	R 4 G
30 001 ... 35 000 mm (1 181.14 ... 1 377.95 inch)	9	R 4 H
35 001 ... 40 000 mm (1 377.99 ... 1 574.80 inch)	9	R 4 J
40 001 ... 45 000 mm (1 574.84 ... 1 771.65 inch)	9	R 4 K
45 001 ... 50 000 mm (1 771.69 ... 1 968.50 inch)	9	R 4 L
50 001 ... 55 000 mm (1 968.54 ... 2 165.35 inch)	9	R 4 M
55 001 ... 60 000 mm (2 165.39 ... 2 362.20 inch)	9	R 4 N
Coax ø 42.2 mm/316L		
300 ... 1 000 mm (11.81 ... 39.37 inch)[25]	9	R 3 G
1 001 ... 2 000 mm (39.41 ... 78.74 inch)[25][26]	9	R 3 H
2 001 ... 3 000 mm (78.78 ... 118.11 inch)[25]	9	R 3 J
3 001 ... 4 000 mm (118.15 ... 157.48 inch)[25]	9	R 3 K
4 001 ... 5 000 mm (157.52 … 196.85 inch)[25]	9	R 3 L
5 001 … 6 000 mm (196.89 … 236.22 inch)[25]	9	R 3 M
Coax ø 42.2 mm/C22		
300 ... 1 000 mm (11.81 ... 39.37 inch)[25]	9	R 3 Q
1 001 ... 2 000 mm (39.41 ... 78.74 inch)[25][26]	9	R 3 R
2 001 ... 3 000 mm (78.78 ... 118.11 inch)[25]	9	R 3 S
3 001 ... 4 000 mm (118.15 ... 157.48 inch)[25]	9	R 3 T
4 001 ... 5 000 mm (157.52 ... 196.85 inch)[25]	9	R 3 U
5 001 ... 6 000 mm (196.89 ... 236.22 inch)[25]	9	R 3 V
Coax ø 21.3 mm/316L		
300 ... 1 000 mm (11.81 ... 39.37 inch)	9	R 5 A
1 001 ... 2 000 mm (39.41 ... 78.74 inch)	9	R 5 B
2 001 ... 3 000 mm (78.78 ... 118.11 inch)	9	R 5 C
3 001 ... 4 000 mm (118.15 ... 157.48 inch)	9	R 5 D
4 001 ... 5 000 mm (157.52 ... 196.85 inch)	9	R 5 E
5 001 ... 6 000 mm (196.89 ... 236.22 inch)	9	R 5 F

© Siemens 2020

Selection and ordering data

	Order code
Further designs (mandatory)	
Please add "**-Z**" to Article No. and specify Order code(s).	
Supplementary electronics	
Without	**A00**
Additional current output 4 ... 20 mA[6)]	**A01**
Dimensions centering weight (diameter/height)	
Without	**B00**
ø 40/30 mm	**B01**
ø 45/30 mm (for 2 inch tubes)	**B02**
ø 75/30 mm (for 3 inch tubes)	**B03**
ø 95/30 mm (for 4 inch tubes)	**B04**
ø 40 mm/30 mm ø 1.57 inch/1.18 inch (for 2 inch Schedule 160)	**B05**
ø 45 mm/30 mm (for 2 inch tubes) ø 1.77 inch/1.18 inch (for 2 inch Schedule 40/80)	**B06**
ø 75 mm/30 mm (for 3 inch tubes) ø 2.95 inch/1.18 inch (for 3 inch Schedule 10/40)	**B07**
ø 95 mm/30 mm (for 4 inch tubes) ø 3.74 inch/1.18 inch (for 4 inch Schedule 80)	**B08**
Rod mounted	
Without Rod, applicable for coax or cable probe types only	**C00**
Mounted	**C01**
Not mounted	**C02**
Indicating/adjustment module	
Without	**E00**
Mounted	**E01**
Laterally mounted	**E02**
Language of display	
German	**L00**
English	**L01**
French	**L02**
Dutch	**L03**
Italian	**L04**
Spanish	**L05**
Portuguese	**L06**
Russian	**L07**
Chinese	**L08**
Japanese	**L09**
Operating instructions	
German	**M00**
English	**M01**
French	**M02**
Spanish	**M03**

	Order code
Further designs (optional)	
Please add "**-Z**" to Article No. and specify Order code(s).	
Enter the total insertion length in plain text description	**Y01**
Y02 rigid part is 100 mm, only applicable for cable versions	**Y02**
Reference probe G length of reference distance = 260 mm/10.24 inches (note blanking 450 mm required with min. probe 1 000 mm)	**Y05**
Reference probe G length of reference distance = 500 mm/19.69 inches (note blanking 690 mm required with min. probe 1 250 mm)	**Y06**
Reference probe G length of reference distance = 750 mm/29.53 inches (note blanking 940 mm required with min. probe 1 500 mm)	**Y07**
Remote electronic cable lengths: 2 m (6.6 ft). Only available with Housing options Q2A and Q2B	**Y10**
Remote electronic cable lengths: 5 m (16.4 ft). Only available with Housing options Q2A and Q2B	**Y11**
Remote electronic cable lengths: 10 m (32.8 ft). Only available with Housing options Q2A and Q2B	**Y12**
Customer specific adjustment (unit value, 100 % distance from seal, 0 % distance from seal)	**Y20**
Cleaning included certificate: oil, grease and silicone free	**W01**
Identification Label (measurement loop) stainless steel, 40 characters max, add in plain text. To add more than one line use a coma "," for line break.	**Y17**
Identification Label (measurement loop) foil, 40 characters max, add in plain text. To add more than one line use a coma "," for line break.	**Y18**
Material Inspection certificate 3.1 of EN 10204	**C05**
3.1-Inspection Certificate for instrument (EN 10204)[27)]	**C12**
Inspection certificate 3.1 (EN 10204, NACE MR 0175) - material.[27)] Note: 316L probes include NACE MR 0175 and MR 0103, non 316L probes include MR 0175 only and plated flange designs are not available with NACE certificate.	**D07**
3.1-Inspection Certificate for instrument with test data (EN 10204)[27)]	**C25**
2.2-Factory certificate for material (EN 10204)[27)]	**C15**
Quality and test plan[27)]	**C26**
Dye penetration test, results confirmed via a 3.1 certificate/instrument (EN10204)[27)]	**C13**
X-ray test + 3.1 certificate/instrument[27)]	**C14**
Positive material identification test + 3.1 certificate/instrument[27)]	**C16**
Roughness test + 3.1 certificate/ instrument[27)]	**C18**
Pressure test + 3.1 certificate/instrument[27)]	**C31**
Helium leak test + 3.1 certificate/ instrument[27)]	**C32**
Pressure test according to Norsok + 3.1 certificate/instrument[27)33)]	**C61**
5 point calibration certificate (min. length 500 mm)[27)]	**C62**
Pressure test (acc. to ASME B31.1), incl. 3.1 Inspection certificate[28)]	**C63**
Certificate: Approval for steam boiler according to EN 12952-11, EN 12953-9[29)]	**C70**

© Siemens 2020

Selection and ordering data

	Order code
Operating Instructions	
All literature is available to download for free, in a range of languages, at	
http://www.siemens.com/processinstrumentation/documentation	
Accessories	
SITRANS LG, GWR sensor Display Module	**A5E34143449**
SITRANS LG, two-wire 4 ... 20 mA/HART electronic	**A5E35637821**
SITRANS LG, USB communicator	**A5E35192015**
SITRANS LG, Mounting eye M12 x 20	**PBD:51041448**
SITRANS LG, Mounting spring	**PBD:51041449**
Siemens Intrinsically Safe Barrier (DC powered), ATEX II 1 G EEx ia	**7NG4124-0AA00**
SITRANS RD100, loop powered display - see Chapter 7	**7ML5741-.....-.**
SITRANS RD150, remote digital display for 4 ... 20 mA and HART devices - see Chapter 7	**7ML5742-.....-....**
SITRANS RD200, universal input display with Modbus conversion - see Chapter 7	**7ML5740-.....-..**
SITRANS RD300, dual line display with totalizer and linearization curve and Modbus conversion - see Chapter 7	**7ML5744-.....-..**
For applicable back up point level switch - see point level measurement section	

Note: some configuration options are not available.
For restriction information see the online PIA configuration tool.

1) Not available with Version/Material options E, F, G, J, and K.
2) Available only with certain Electronic options.
3) Not available with Seal/Process temperature option D.
4) Not available with Stainless Steel (electropolished) Housing/ Protection/Cable options and certain glands.
5) Available only with Supplementary electronic option A00.
6) Not available with Indicating/adjusting module E02.
7) Not available with Plastic and Stainless Steel (electropolished) Housing/Protection/Cable options and certain glands.
8) Available only with Double chamber, Metallic Housing/Protection/Cable options and certain glands.
9) Available only with Version/Material options A, B, C, D, and H.
10) Not available with Remote and Stainless Steel (electropolished) Housing/Protection/Cable options and certain glands.
11) Available only with Single chamber, Aluminum and Stainless steel (precision casting) Housing/Protection/Cable options.
12) Available only with Housing/Protection/Cable options N, P, V, and Q2A.
13) Not available with Housing/Protection/Cable options W, X, Y, and J.
14) Available only with Housing/Protection/Cable options C, E, L, Q.
15) Not available with Seal/Process temperature option C.
16) Available only with Dimensions centering weight option B00.
17) Available only with Rod mounted option C00.
18) Not available with Dimensions centering weight option B00.
19) Not available with Rod mounted option C00.
20) Not available with Seal/Process temperature options C and D.
21) Not available with Remote Housing/Protection/Cable options.
22) Not available with Seal/Process temperature options B and D.
23) Available only with Seal/Process temperature option D.
24) Available only with Seal/Process temperature options A, B, and C.
25) Not available with Order code Y02.
26) Accuracy is application dependent, please consult factory.
27) Listed Certificates are not available with all configurations, please contact factory for more information.
28) Available only with ASME Process fitting/Material options.
29) Available with Version/Material options G, L, M and Electronic options 2 and 6.
30) Available only with Alloy C22 Process fitting/Material options.
31) Available only with Version/Material option M.
32) Available only with some Version/Material options.
33) Available only with Norsok Process fitting options.
34) Available only with Seal/Second line of defense/Process temperature options A and B.
35) Available only with 316L probe Version/material options. Nace not available with coated, plated, or hygienic connections.

Note: Please consult manual for further details.

© Siemens 2020

Selection and ordering data

	Article No.
SITRANS LG Remote Interface ↗	**7ML5840-**
Provides remote display and configuration for SITRANS LG series guided radar level transmitters.	■■■■■ - ■■■■ 0
↗ Click on the Article No. for the online configuration in the PIA Life Cycle Portal.	
Note: for installation of remote display, 7ML5840, with LG two chamber housing options, contact PVC	
Approval	
For Ex-free area	0 A
ATEX II 1G, 2G, Ex ia IIC T6 Ga, Gb	0 C
ATEX II 2G, Ex d IIC T6 Gb[1]	0 E
IEC Ex ia IIC T6 Ga, Gb	0 F
IEC Ex d IIC T6 Gb[1]	0 G
$_{C}CSA_{US}$ (NI) Class I, Div. 2, Groups A, B, C, D; (DIP) Class II, III, Div. 1, Groups E, F, G	0 H
$_{C}CSA_{US}$ (IS) Class I, II, III, Div. 1, Groups A, B, C, D, E, F, G	0 J
$_{C}CSA_{US}$ (XP) Class I, Div. 1, Groups A, B, C, D[1]	0 K
INMETRO Ex ia IIC T6 Ga, Gb	0 L
INMETRO Ex d IIC T6 Gb[1]	0 M
Shipping Approval (DNV/GL)[6]	0 N
ATEX II 1G, 2G Ex ia IIC T6 Ga, Gb + Ship approval	0 P
ATEX II 2G Ex db IIC T6 Gb + Ship approval[1]	0 Q
IEC Ex ia IIC T6 Ga, Gb + Ship approval	0 R
IEC Ex db IIC T6 Gb + Ship approval[1]	0 S
$_{c}CSA_{us}$ (IS) Class I, II, III, Div. 1, Groups A, B, C, D, E, F, G + Ship approval	0 T
$_{c}CSA_{us}$ (XP) Class I, Div. 1, Groups A, B, C, D + Ship approval[1]	0 U
Electronics	
Digital (I²C communication)	A
Housing	
Plastic[2)4)]	0
Aluminum[3)5)]	1
Stainless Steel (precision casting)[3)5)]	2
Housing protection	
IP66/IP67 NEMA 4X	0
IP66/IP68 NEMA 6P (0.2 bar)	1
Cable entry	
M20 x 1.5/ Blind plug	3
½" NPT/ Blind plug	5
Display	
Without	A
Mounted	B
Mounting	
For wall mounting with Aluminum or stainless steel housing	A
For carrier rail and wall mounting with plastic housing	B
For carrier rail with Aluminum or stainless steel housing	C
For tube mounting (29 ... 60 mm) including mounting material	D
Certificates	
None	0
3.1 Certificate/Instrument with test data	1
Quality and Test plan	2

	Article No.
SITRANS LG Replacement Probes ↗	**7ML5841-**
For use with SITRANS LG series guided radar level transmitters.	■■■■■ - ■■■ 0
↗ Click on the Article No. for the online configuration in the PIA Life Cycle Portal.	
Instrument	
LG240[4)]	0
LG250[6)]	1
LG260[7)]	2
LG270[9)10)]	3
Probe Type[3)]	
Exchangeable cable ø 2 mm with gravity weight/316[1)11)]	A A
Exchangeable cable ø 2 mm center weight/316[2)11)]	A C
Exchangeable cable ø 4 mm without weight/316[1)11)]	A D
Exchangeable cable ø 4 mm with gravity weight/316[1)11)]	A E
Exchangeable cable ø 4 mm with center weight/316[2)11)]	A G
Exchangeable cable ø 6 mm with gravity weight/316[1)8)11)]	A H
Exchangeable rod ø 8 mm/316L[1)]	A P
Exchangeable rod ø 8 mm/1.4435 (acc. to Basle Standard)[1)]	A Q
Exchangeable rod ø 12 mm/316L[1)]	A U
Exchangeable rod ø 16 mm/316L[1)]	A W
Exchangeable coated cable ø4 mm with uncoated centering weight / PFA and 316[11)12)]	B A
Process fitting	
Thread less than or equal to 1½ inch	0
Thread greater than or equal to 2 inch	1
Flange less than DN 50 or 2 inch	2
Flange greater or equal to DN 50 or 2 inch or hygienic fitting (not for safety ingold 25 x 46 mm)	3
Dimension centering weight	
Without	0
ø 40 mm/30 mm	1
ø 45 mm/30 mm (for 2 inch tubes)	2
ø 75 mm/30 mm (for 3 inch tubes)	3
ø 95 mm/30 mm (for 4 inch tubes)	4
ø 1.57 inch/1.18 inch (for 2 inch Schedule 160)	5
ø 1.77 inch/1.18 inch (for 2 inch Schedule 40/80)	6
ø 2.95 inch/1.18 inch (for 3 inch Schedule 10/40)	7
ø 3.74 inch/1.18 inch (for 4 inch Schedule 80)	8
Certificates	
Without	0
2.2 Material certificate	1
3.1 Material certificate	2

1) Available only with Housing options 1 and 2.
2) Available only with Housing option 0.
3) Available only with Housing option 1.
4) Available only with Mounting options B and D.
5) Not available with Mounting option B.
6) Shipping approval is only available with housing options 0 and 1.

© Siemens 2020

Selection and ordering data

	Article No.
SITRANS LG Replacement Probes For use with SITRANS LG series guided radar level transmitters.	**7ML5841-** ■■■■■ - ■■■ **0**
Lengths	
Rod ø 8 mm	
300 ... 1 000 mm (11.81 ... 39.37 inch)	**A A**
1 001 ... 2 000 mm (39.41 ... 78.74 inch)	**A B**
2 001 ... 3 000 mm (78.78 ... 118.11 inch)	**A C**
3 001 ... 4 000 mm (118.15 ... 157.48 inch)	**A D**
4 001 ... 5 000 mm (157.52 ... 196.85 inch)	**A E**
5 001 ... 6 000 mm (196.89 ... 236.22 inch)	**A F**
Rod ø 12 mm	
300 ... 1 000 mm (11.81 ... 39.37 inch)	**A G**
1 001 ... 2 000 mm (39.41 ... 78.74 inch)	**A H**
2 001 ... 3 000 mm (78.78 ... 118.11 inch)	**A J**
3 001 ... 4 000 mm (118.15 ... 157.48 inch)	**A K**
4 001 ... 5 000 mm (157.52 ... 196.85 inch)	**A L**
5 001 ... 6 000 mm (196.89 ... 236.22 inch)	**A M**
Rod ø 16 mm	
300 ... 1 000 mm (11.81 ... 39.37 inch)	**A N**
1 001 ... 2 000 mm (39.41 ... 78.74 inch)	**A P**
2 001 ... 3 000 mm (78.78 ... 118.11 inch)	**A Q**
3 001 ... 4 000 mm (118.15 ... 157.48 inch)	**A R**
4 001 ... 5 000 mm (157.52 ... 196.85 inch)	**A S**
5 001 ... 6 000 mm (196.89 ... 236.22 inch)	**A T**
Cable Lengths ø 2 mm and 4 mm/316	
501 ... 1 000 mm (19.72 ... 39.37 inch)	**A U**
1 001 ... 5 000 mm (39.41 ... 196.85 inch)	**A V**
5 000 ... 10 000 mm (196.85 ... 393.70 inch)	**A W**
10 001 ... 15 000 mm (393.74 ... 590.55 inch)	**A X**
15 001 ... 20 000 mm (590.59 ... 787.40 inch)	**A Y**
20 001 ... 25 000 mm (787.44 ... 984.25 inch)	**B A**
25 001 ... 30 000 mm (984.29 ... 1 181.10 inch)	**B B**
30 001 ... 35 000 mm (1 181.14 ... 1 377.95 inch)	**B C**
35 001 ... 40 000 mm (1 377.99 ... 1 574.80 inch)	**B D**
40 001 ... 45 000 mm (1 574.84 ... 1 771.65 inch)	**B E**
45 001 ... 50 000 mm (1 771.69 ... 1 968.50 inch)	**B F**
50 001 ... 55 000 mm (1 968.54 ... 2 165.35 inch)	**B G**
55 001 ... 60 000 mm (2 165.39 ... 2 362.20 inch)	**B H**
60 001 ... 65 000 mm (2 362.24 ... 2 559.06 inch)	**B J**
65 001 ... 70 000 mm (2 559.09 ... 2 755.91 inch)	**B K**
70 001 ... 75 000 mm (2 755.94 ... 2 952.76 inch)	**B L**

	Article No.
SITRANS LG Replacement Probes For use with SITRANS LG series guided radar level transmitters.	**7ML5841-** ■■■■■ - ■■■ **0**
Cable Lengths ø 6 mm/316	
501 ... 1 000 mm (19.72 ... 39.37 inch)	**B M**
1 001 ... 5 000 mm (39.41 ... 196.85 inch)	**B N**
5 000 ... 10 000 mm (196.89 ... 393.70 inch)	**B P**
10 001 ... 15 000 mm (393.74 ... 590.55 inch)	**B Q**
15 001 ... 20 000 mm (590.59 ... 787.40 inch)	**B R**
20 001 ... 25 000 mm (787.44 ... 984.25 inch)	**B S**
25 001 ... 30 000 mm (984.29 ... 1 181.10 inch)	**B T**
30 001 ... 35 000 mm (1 181.14 ... 1 377.95 inch)	**B U**
35 001 ... 40 000 mm (1 377.99 ... 1 574.80 inch)	**B V**
40 001 ... 45 000 mm (1 574.84 ... 1 771.65 inch)	**B W**
45 001 ... 50 000 mm (1 771.69 ... 1 968.50 inch)	**B X**
50 001 ... 55 000 mm (1 968.54 ... 2 165.35 inch)	**B Y**
55 001 ... 60 000 mm (2 165.39 ... 2 362.20 inch)	**C A**
60 001 ... 65 000 mm (2 362.24 ... 2 559.06 inch)	**C B**
65 001 ... 70 000 mm (2 559.09 ... 2 755.91 inch)	**C C**
70 001 ... 75 000 mm (2 755.94 ... 2 952.76 inch)	**C D**
Cable Lengths ø 4 mm/316	
300 ... 1 000 mm (12 ... 39.37 inch)	**D A**
1 001 ... 2 000 mm (39.41 ... 78.74 inch)	**D B**
2 001 ... 5 000 mm (78.77 ... 196.85 inch)	**D C**
5 001 ... 10 000 mm (196.89 ... 393.70 inch)	**D D**
10 001 ... 15 000 mm (393.74 ... 590.55 inch)	**D E**
15 001 ... 20 000 mm (590.59 ... 787.40 inch)	**D F**
20 001 ... 25 000 mm (787.44 ... 984.25 inch)	**D G**
25 001 ... 32 000 mm (984.29 ... 1 259.84 inch)	**D H**

Further designs Please add "**-Z**" to Article No. and specify Order code(s).	Order code
Enter the total insertion length in plain text description	**Y01**
Total length: Enter the total length of rigid part (range 100 ... 1 000 mm LG270 limited to 100 mm) (cable versions only)	**Y02**

1) Available only with Dimension centering weight option 0.
2) Available only with Dimension centering weight options 1 ... 8.
3) All Probe types are only available with corresponding Probe lengths.
4) Not available with Probe type options AH, AQ, and AW.
5) Available only with Process fitting options 2 and 3.
6) Not available with Probe type options AQ and AW.
7) Available only with Probe type options AE, AH, and AW.
8) Not available with Process fitting option 2.
9) Available only with Probe type options AA, AC, AE, AG, and AW.
10) Available only with Process fitting options 0 and 3.
11) Not available with certificate options 1 and 2.
12) Available only with Dimension centering weight options 1 ... 4.

© Siemens 2020

Selection and ordering data

	Article No.												
SITRANS LG Spacers ↗	**7ML5842-**												
For use with SITRANS LG series guided radar level transmitters.	■	■	■	■	-	0	0	A	A	0			
↗ Click on the Article No. for the online configuration in the PIA Life Cycle Portal.													
Instrument													
LG240[1]	0												
LG250[2]	1												
LG260[3]	2												
LG270[3]	3												
Version/Material													
Cable ø 4 mm/ PFA[4]		A	A										
Rod ø 8 mm including fastening/ PEEK can be shortened[5]		A	B										
Rod ø 10 mm/ PFA[4]		A	C										
Rod ø 12 mm including fastening/ PEEK can be shortened[5]		A	D										
Rod ø 16 mm, cable with gravity weight, including fastening/ PEEK can be shortened[5][7]		A	E										
Cable ø 2 mm including fastening/ PEEK and 316L		A	F										
Rod ø 16 mm including fastening/ 1.4568 (AISI 631) flexible[8]		A	G										
Rod ø 8 mm including fastening/ PTFE can be shortened[5]		A	H										
Rod ø 12 mm including fastening/ 1.4568 (AISI 631) flexible[6]		A	G										
Tube diameter													
50 mm (2 inch) up to 100 mm (4 inch)				1									
49.2 mm (1.9 inch) up to 56.3 mm (2.2 inch)				2									
66.6 mm (2.6 inch) up to 84.9 mm (3.3 inch)				3									

1) Available only with Version/Material options AA and AC.
2) Available only with Version/Material options AB, AD, AE, AH and AJ.
3) Available only with Version/Material options AE and AG.
4) Available only with Tube Diameter option 1 and LG240.
5) Available only with Tube Diameter options 2 and 3 and LG250.
6) Available only with Tube Diameter option 1 and LG250.
7) Available only with Tube diameter option 1 and LG260 or LG270.
8) Available only with Tube Diameter options 2 and 3 and LG260 or LG270.

© Siemens 2020

Characteristic curves

SITRANS LG240, Ambient temperature/process temperature, standard version

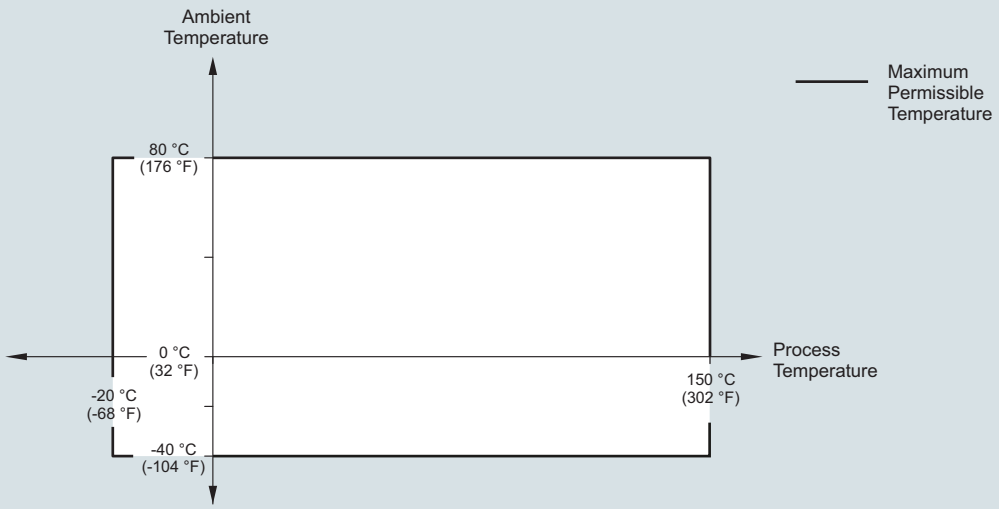

SITRANS LG240, ambient temperature/process temperature curve

© Siemens 2020

Characteristic curves (continued)

SITRANS LG250, Ambient temperature/process temperature, standard version

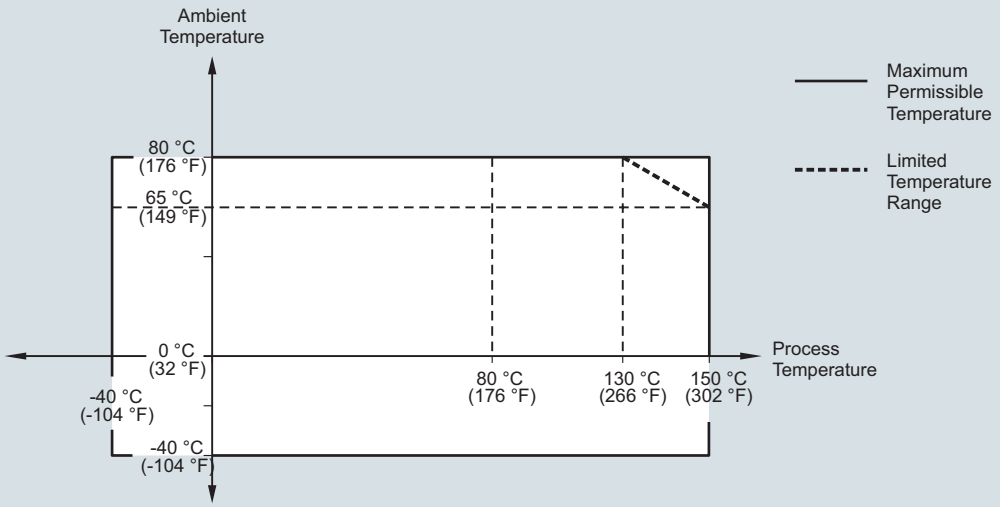

SITRANS LG250, Ambient temperature/process temperature, temperature adapter version

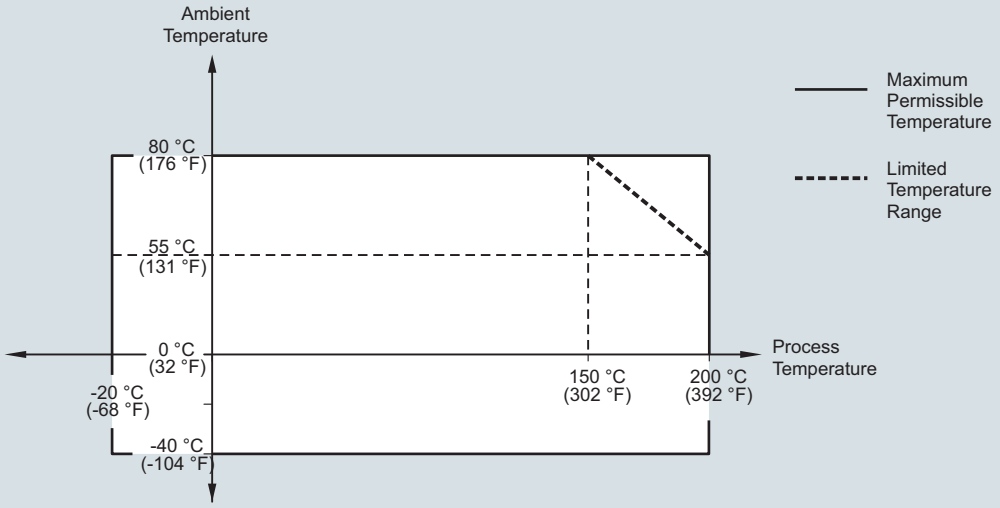

SITRANS LG250, ambient temperature/process temperature curves

© Siemens 2020

Characteristic curves (continued)

SITRANS LG260, Maximum tensile load with cereals and plastic granules - cable: ø 4 mm (0.157 inch)

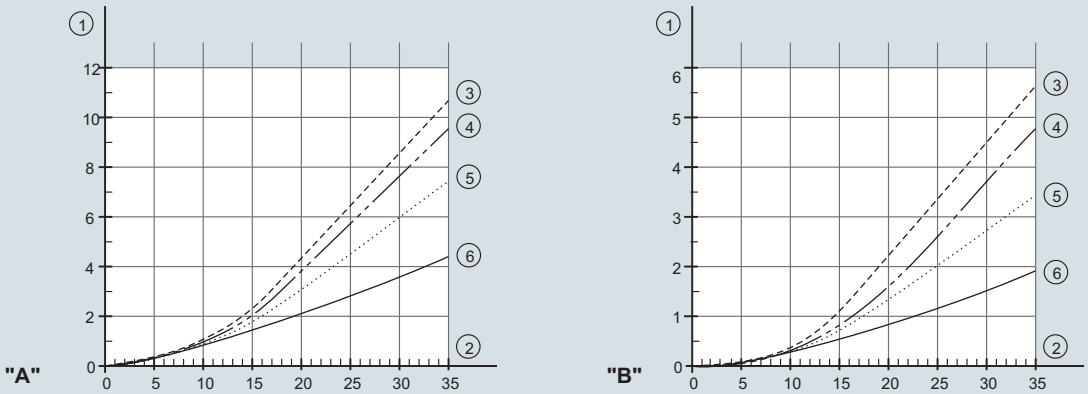

A. Cereals
B. Plastic granules
1. Tensile force in kN (the determined value must be multiplied with safety factor 2)
2. Cable length in m
3. Vessel diameter 12 m (39.37 ft)
4. Vessel diameter 9 m (29.53 ft)
5. Vessel diameter 6 m (19.69 ft)
6. Vessel diameter 3 m (9.843 ft)

SITRANS LG260, Maximum tensile load with sand and cement - cable: ø 4 mm (0.157 inch)

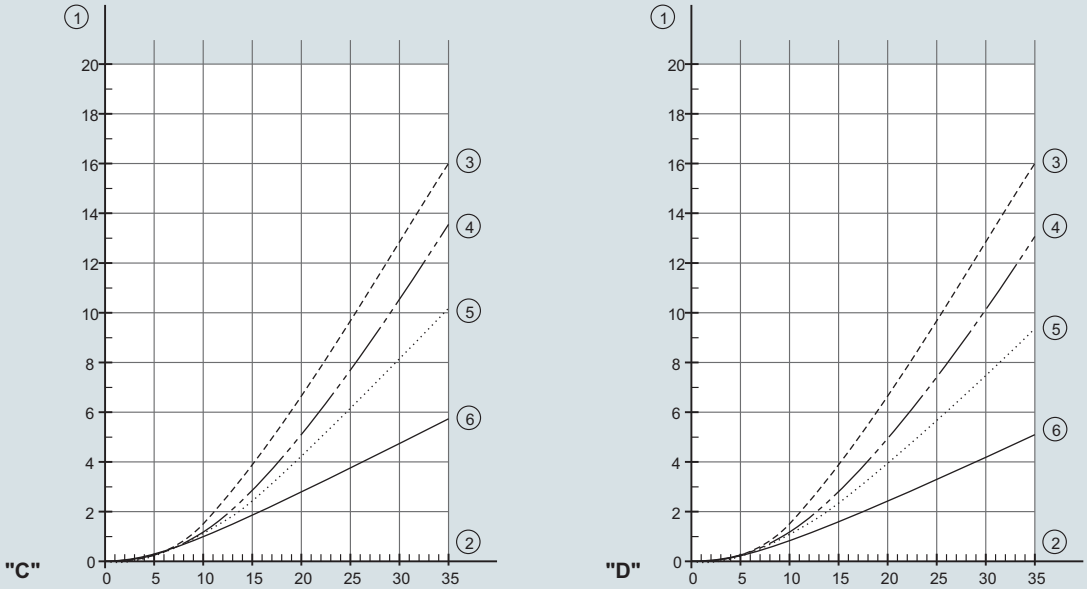

C. Sand
D. Cement
1. Tensile force in kN (the determined value must be multiplied with safety factor 2)
2. Cable length in m
3. Vessel diameter 12 m (39.37 ft)
4. Vessel diameter 9 m (29.53 ft)
5. Vessel diameter 6 m (19.69 ft)
6. Vessel diameter 3 m (9.843 ft)

SITRANS LG260, maximum tensile load curves

© Siemens 2020

Characteristic curves (continued)

SITRANS LG260, Ambient temperature/process temperature, standard version
Cable version with ø 4 mm (0.157 inch)
Cable version, PA coated with ø 6 mm (0.236 inch)

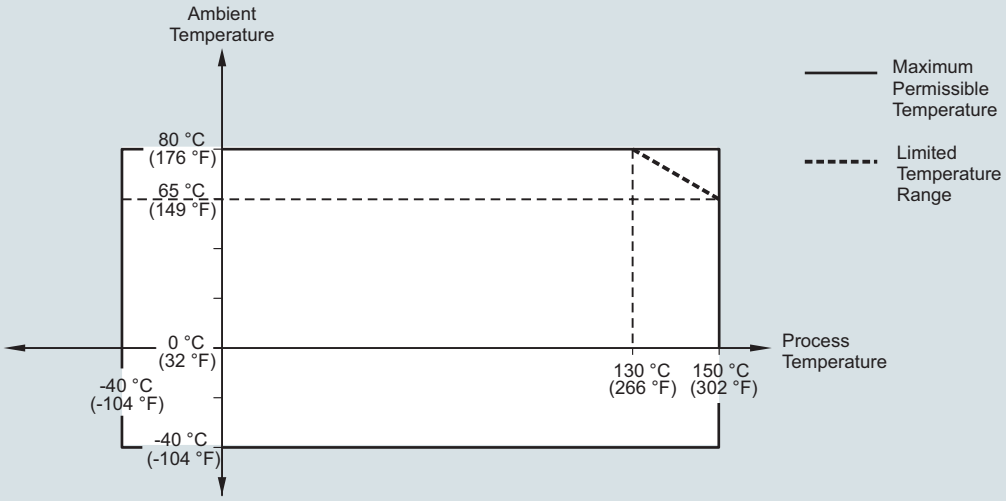

SITRANS LG260, Ambient temperature/process temperature, temperature adapter version
Cable version with ø 4 mm (0.157 inch)
Cable version, PA coated with ø 6 mm (0.236 inch)

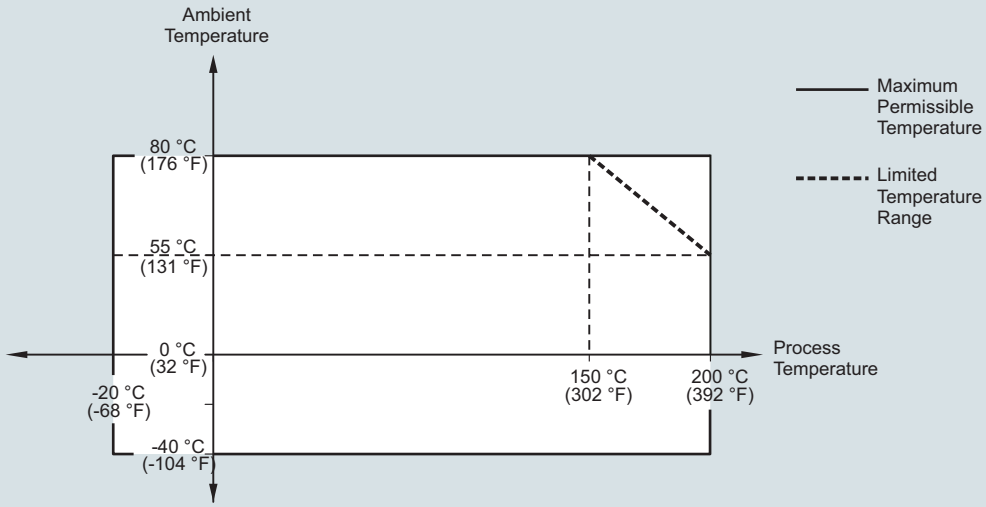

SITRANS LG260, ambient temperature/process temperature curves

© Siemens 2020

Characteristic curves (continued)

SITRANS LG260, Ambient temperature/process temperature, standard version
Cable version with ø 6 mm (0.236 inch)
Cable version, PA coated with ø 11 mm (0.433 inch)

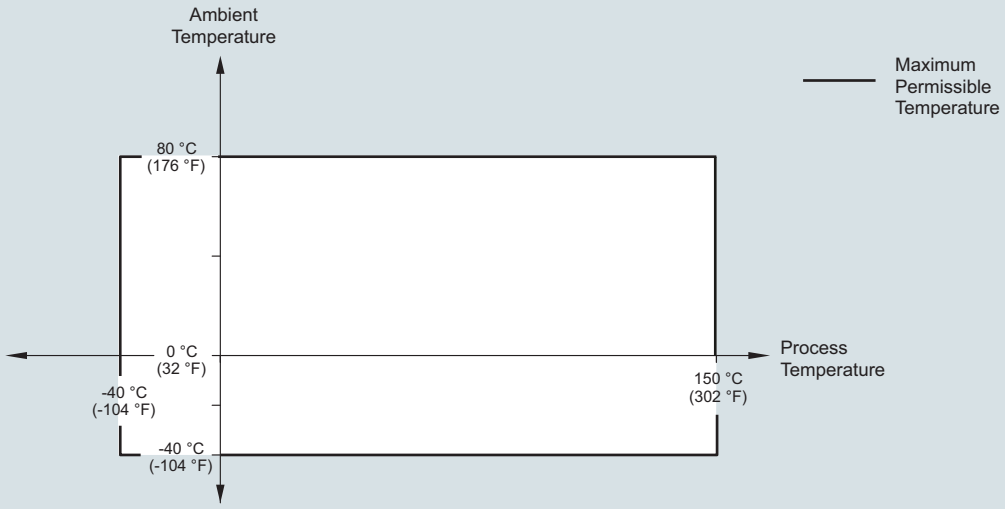

SITRANS LG260, Ambient temperature/process temperature, temperature adapter version
Cable version with ø 6 mm (0.236 inch)
Cable version, PA coated with ø 11 mm (0.433 inch)

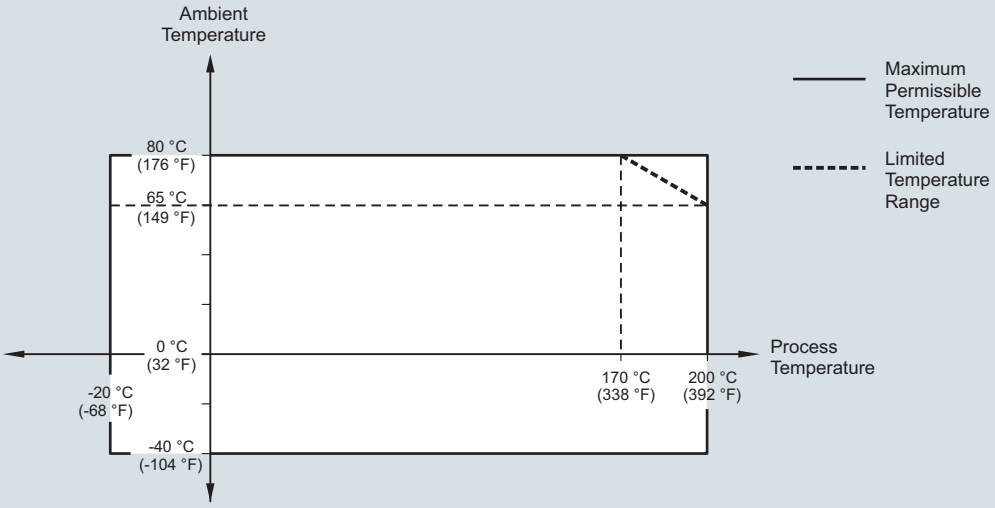

SITRANS LG260, ambient temperature/process temperature curves

© Siemens 2020

Characteristic curves (continued)

SITRANS LG270, Ambient temperature/process temperature (-196 … +280 °C/-321 … +536 °F version)

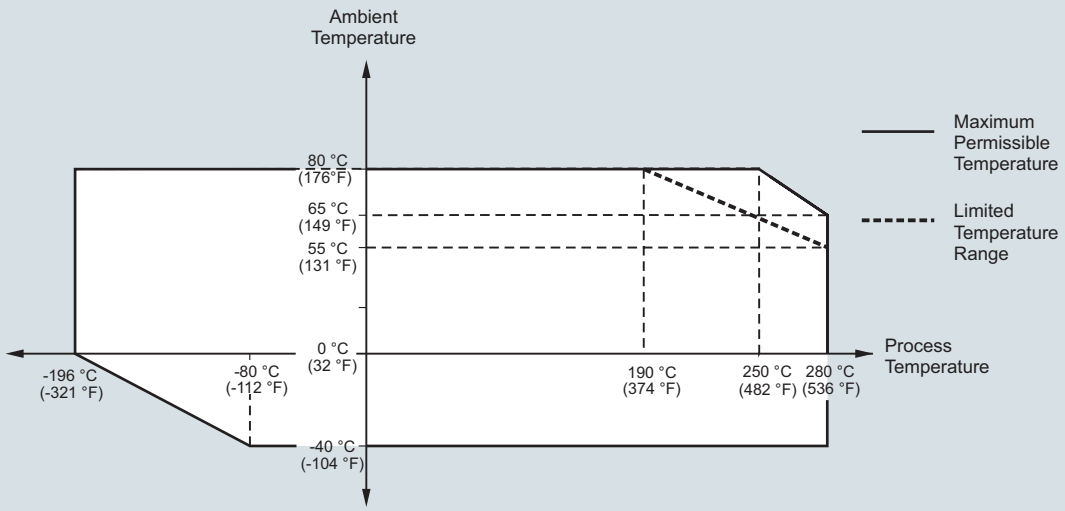

SITRANS LG270, Ambient temperature/process temperature (-196 … +450 °C/-321 … +842 °F version)

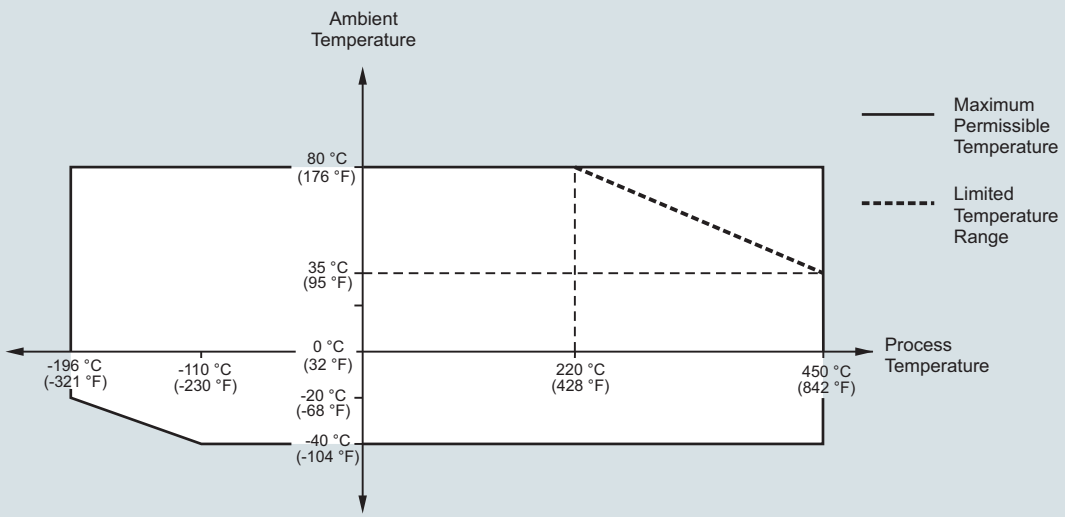

SITRANS LG270, ambient temperature/process temperature curves

© Siemens 2020

Characteristic curves (continued)

SITRANS LG270, Process pressure/process temperature (-196 … +450 °C/-321 … +842 °F version)

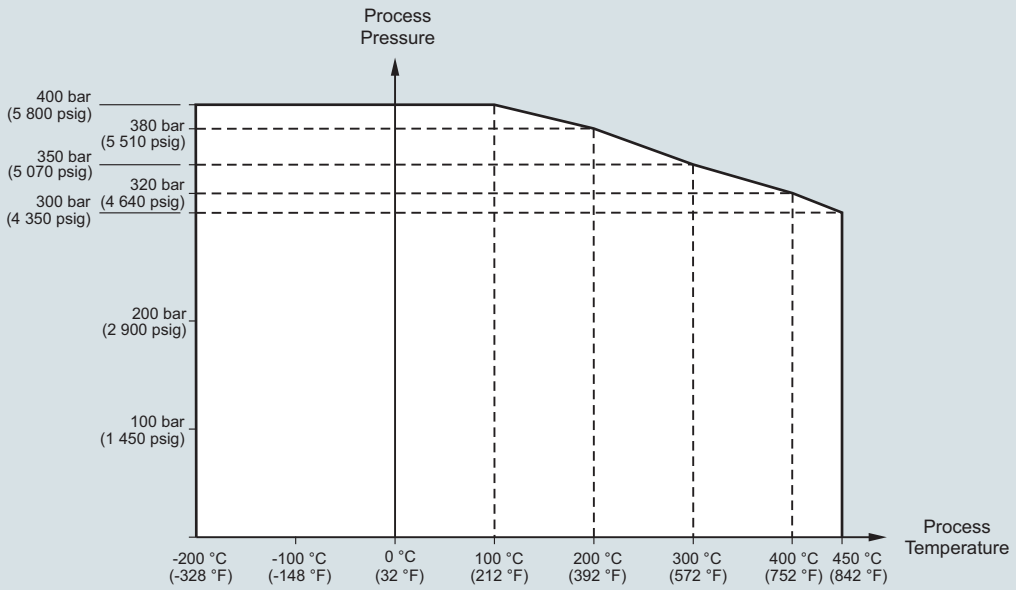

SITRANS LG270, process pressure/process temperature curve

© Siemens 2020

Dimensional drawings

SITRANS LG Series plastic housing

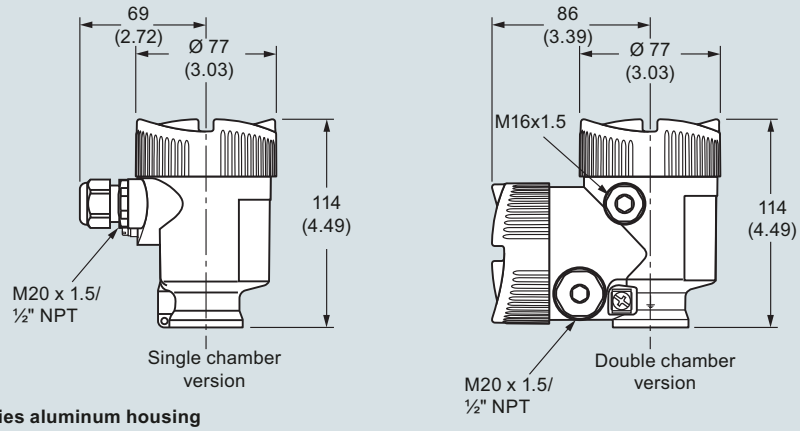

SITRANS LG Series aluminum housing

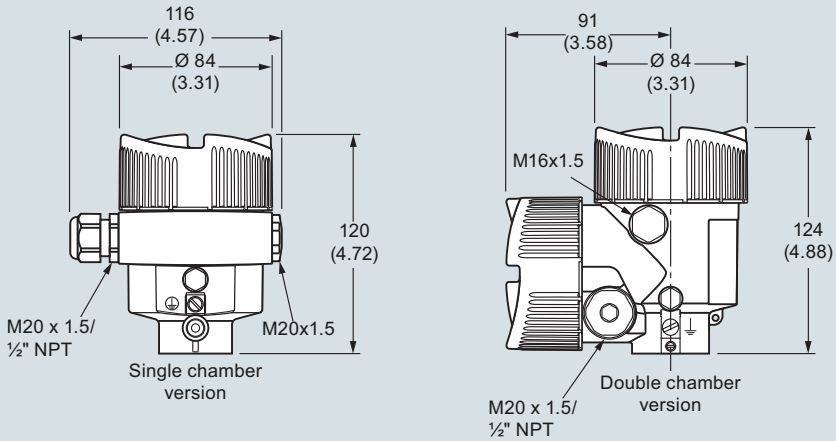

SITRANS LG Series stainless steel housing

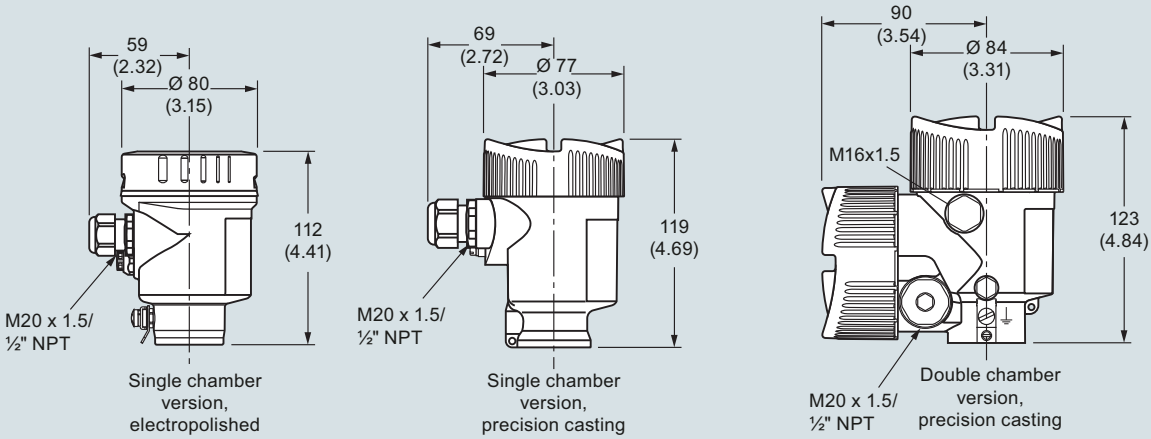

Note: For integrated display and adjustment module the housing is 9 (0.35) higher for all housing options

SITRANS LG series, dimensions in mm (inch)

© Siemens 2020

Dimensional drawings (continued)

SITRANS LG240

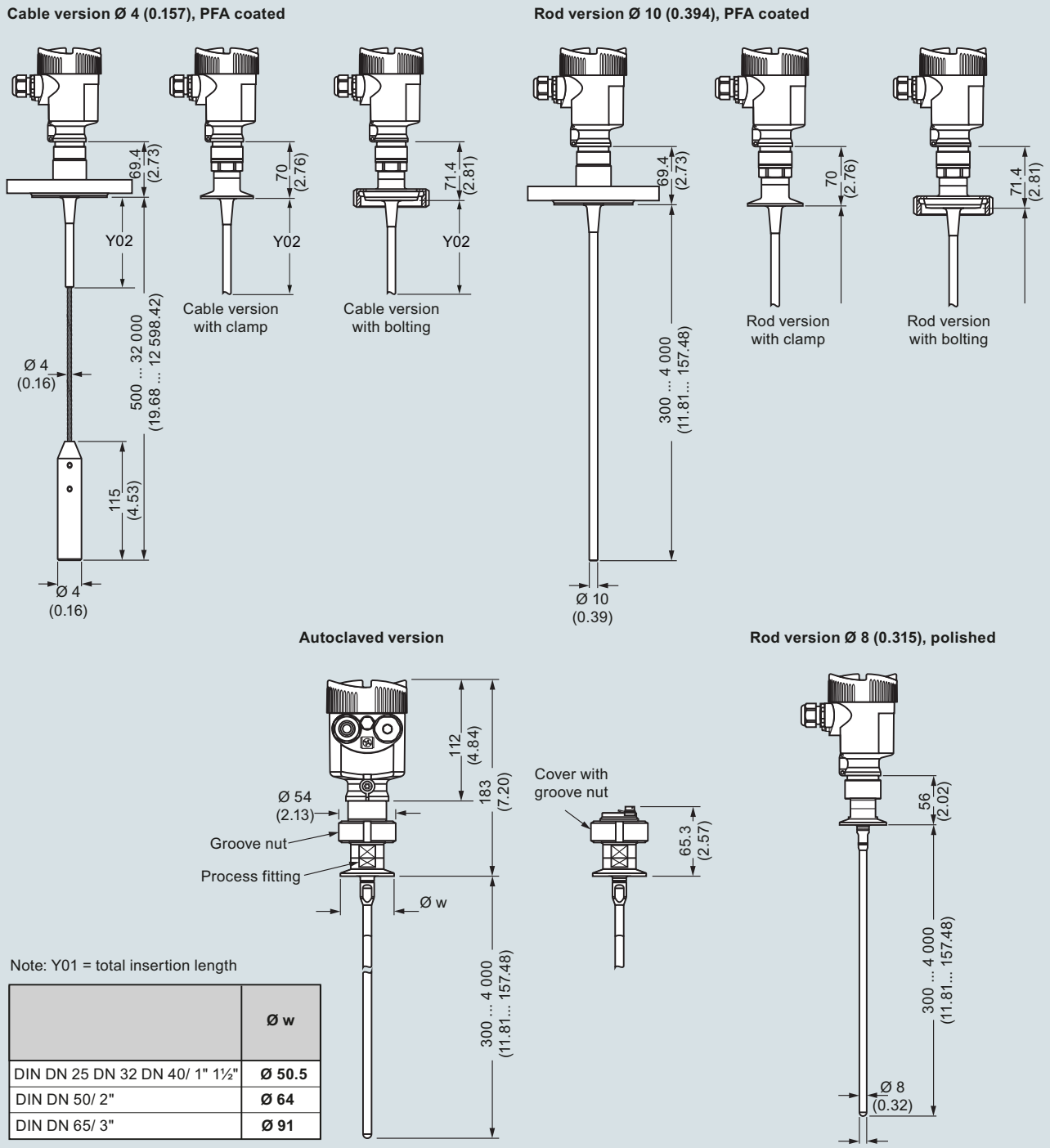

Note: Y01 = total insertion length

	Ø w
DIN DN 25 DN 32 DN 40/ 1" 1½"	**Ø 50.5**
DIN DN 50/ 2"	**Ø 64**
DIN DN 65/ 3"	**Ø 91**

SITRANS LG240, dimensions in mm (inch)

© Siemens 2020

Dimensional drawings (continued)

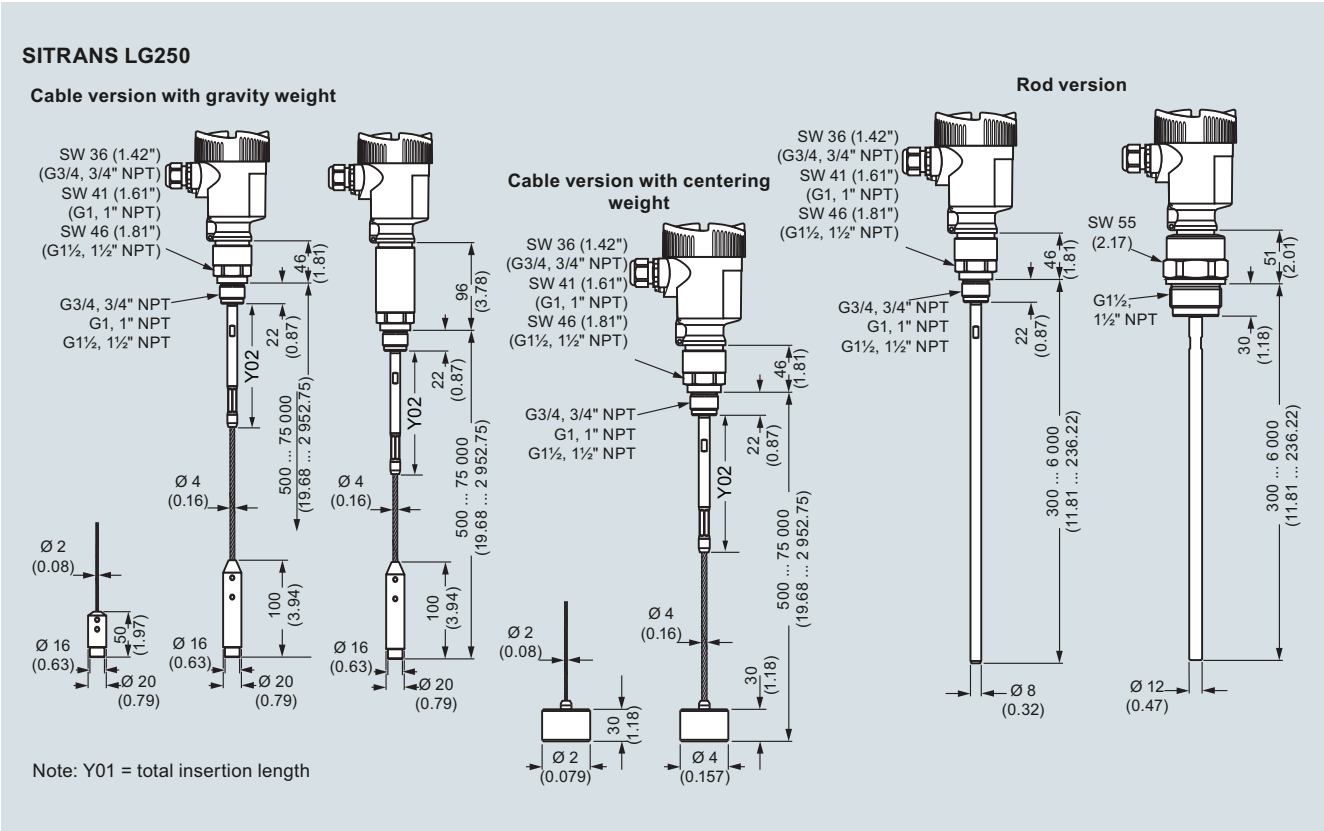

SITRANS LG250, dimensions in mm (inch)

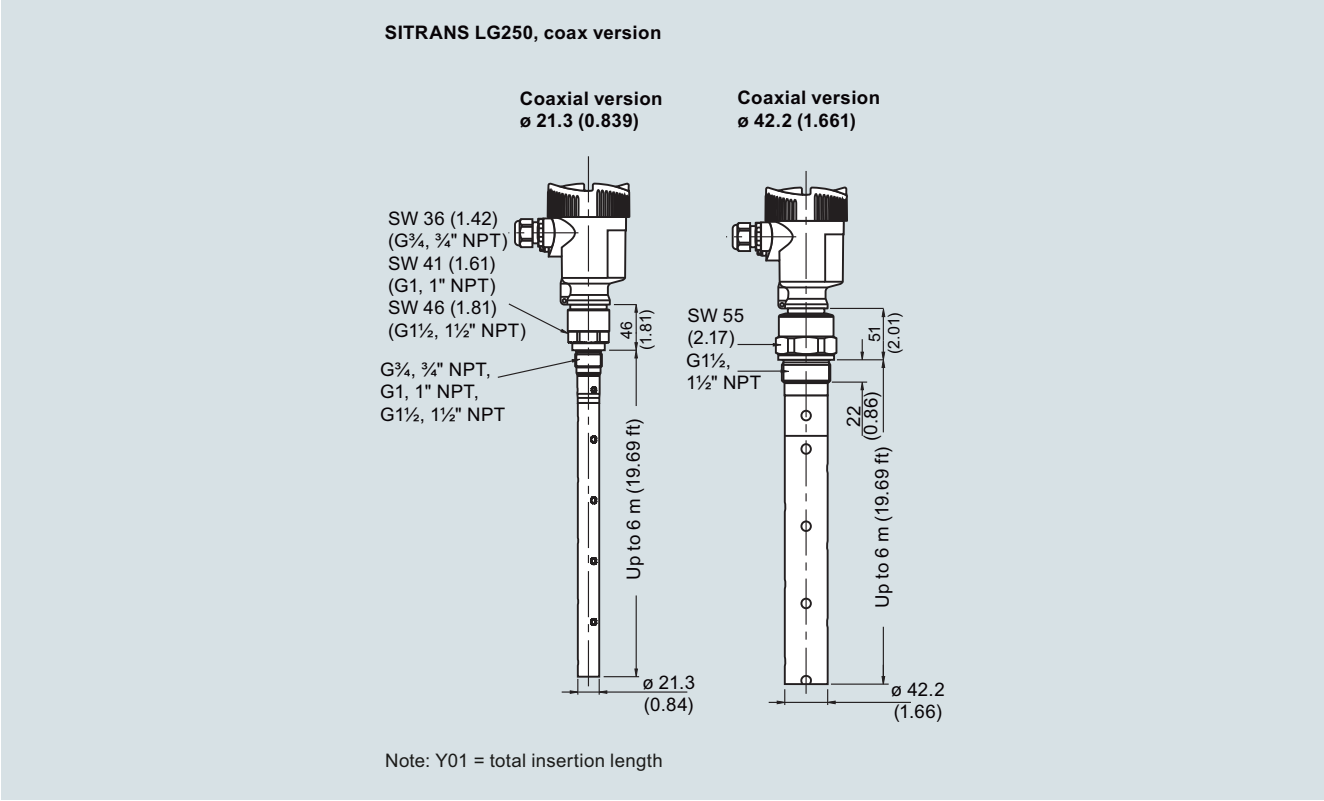

SITRANS LG250, dimensions in mm (inch)

© Siemens 2020

Dimensional drawings (continued)

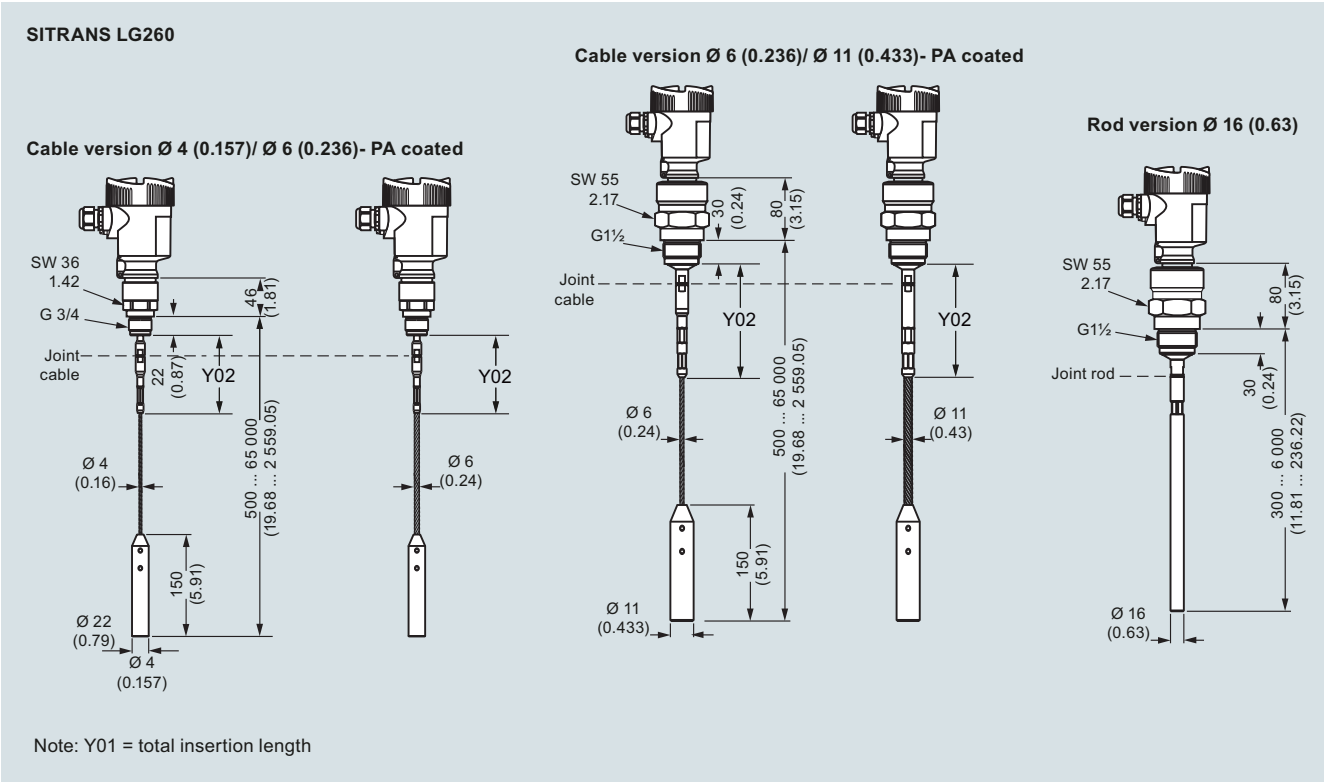

SITRANS LG260, dimensions in mm (inch)

© Siemens 2020

Dimensional drawings (continued)

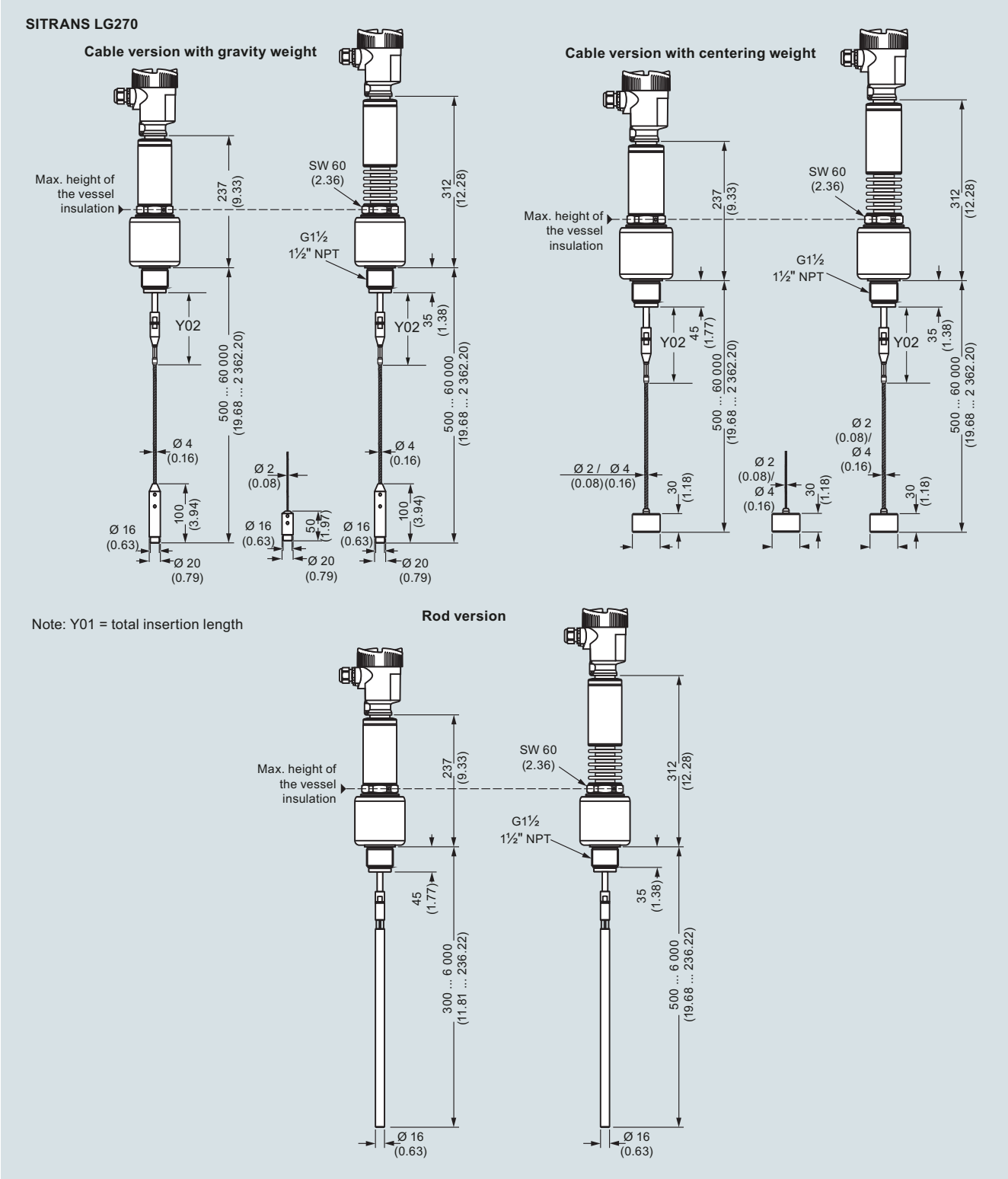

SITRANS LG270, dimensions in mm (inch)

© Siemens 2020

Dimensional drawings (continued)

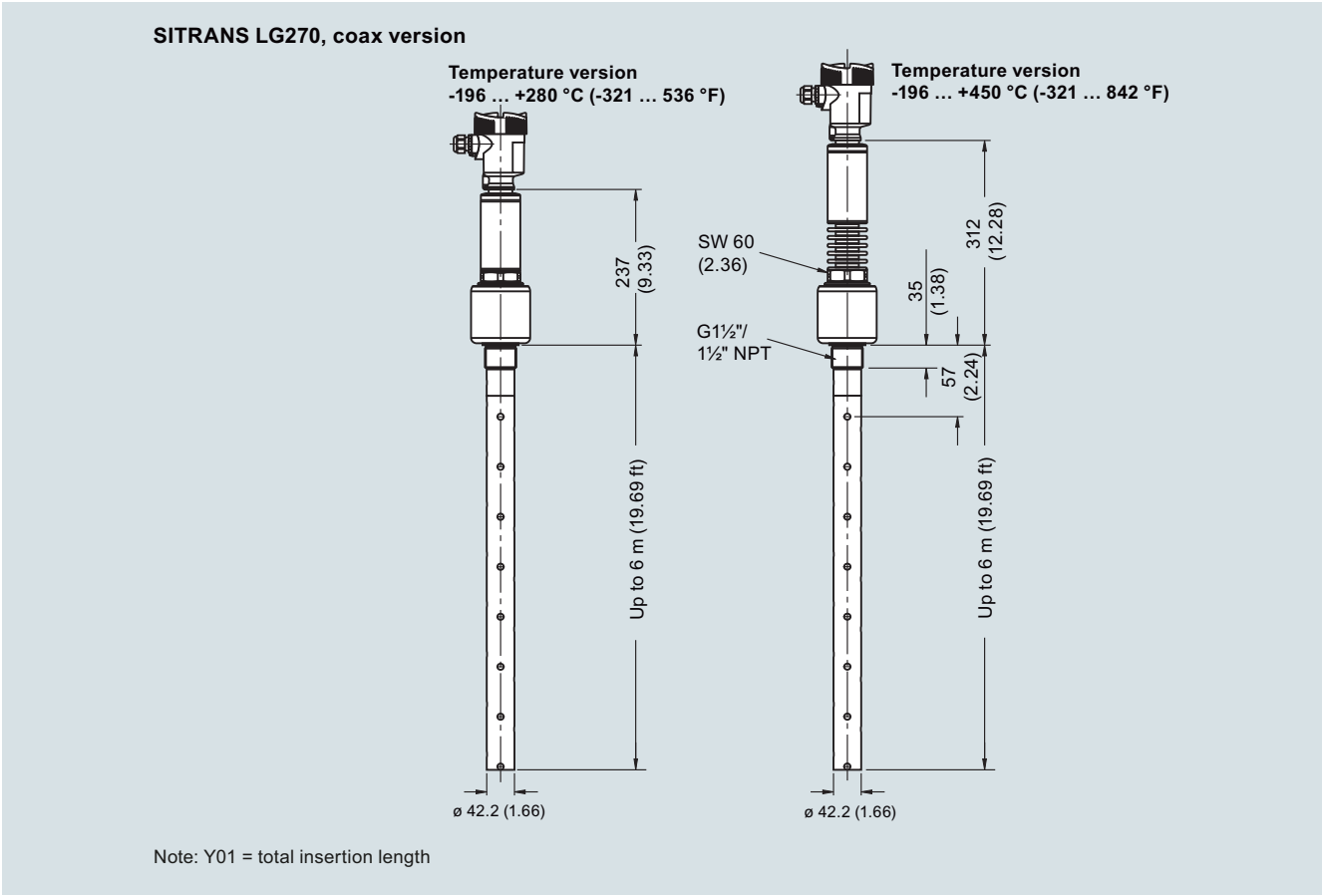

SITRANS LG270, dimensions in mm (inch)

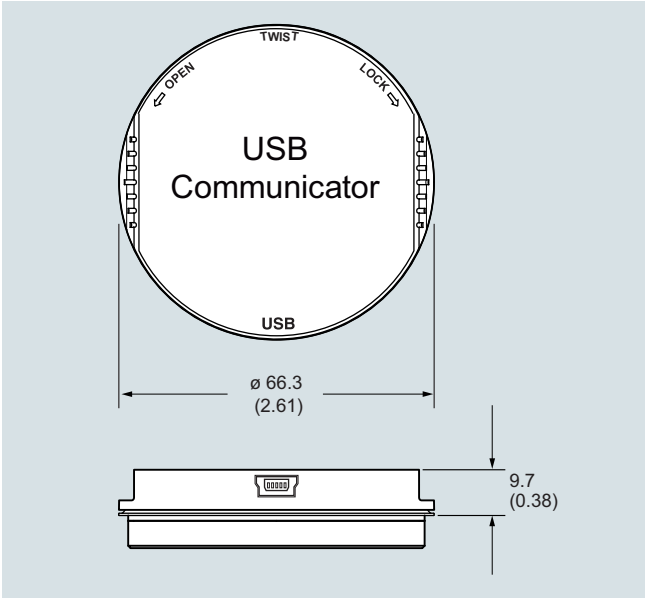

SITRANS LG USB Communicator, dimensions in mm (inch)

© Siemens 2020

Dimensional drawings (continued)

SITRANS LG remote interface, aluminum housing

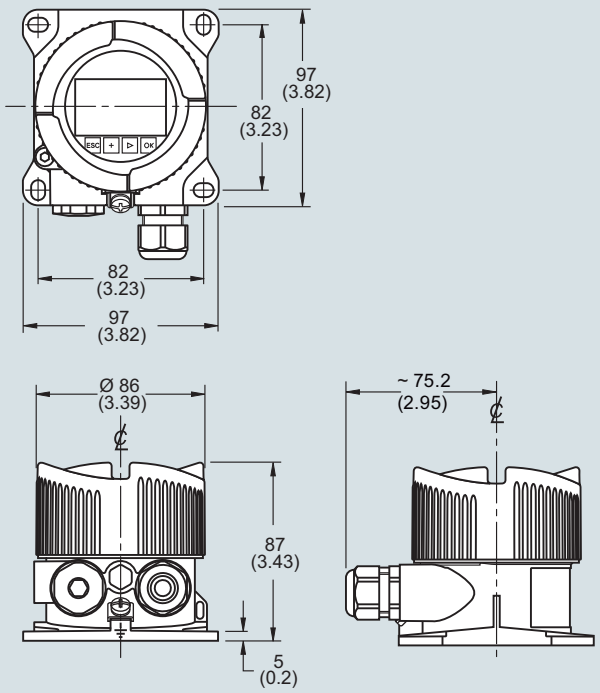

SITRANS LG remote interface, plastic housing

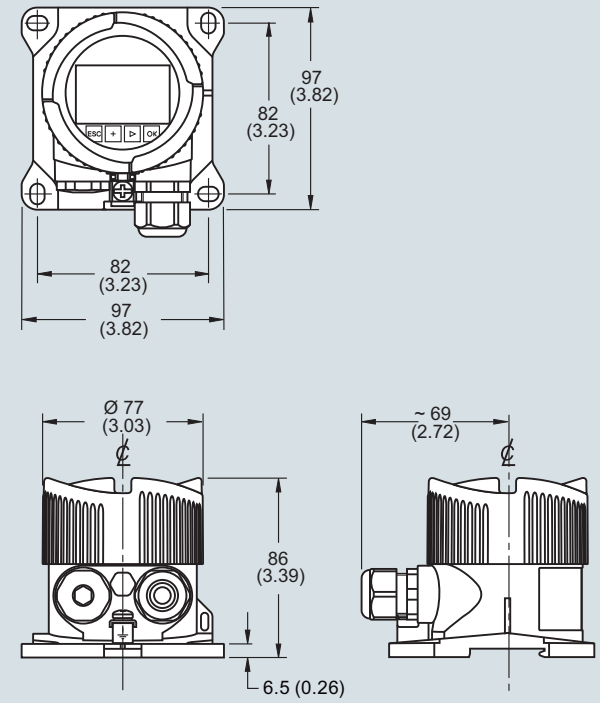

SITRANS LG remote interface, dimensions in mm (inch)

© Siemens 2020

Circuit diagrams

2-wire HART electronic option, electronics and connection compartment, single chamber housing

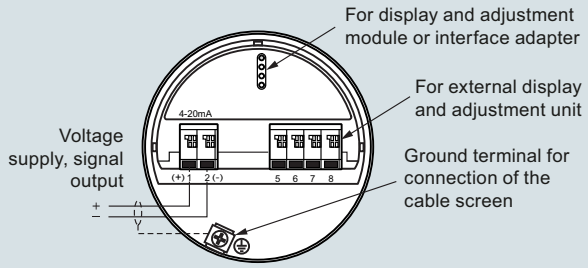

2-wire HART electronic option, electronics compartment, double chamber housing

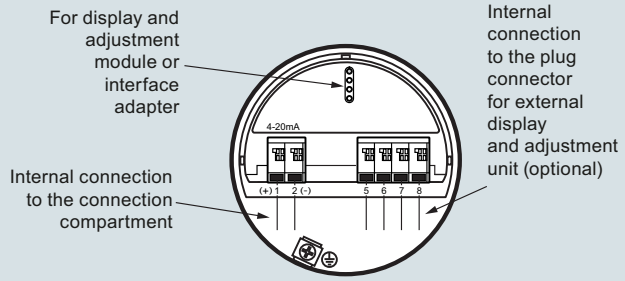

2-wire HART electronic option, connection compartment, Ex-d-ia double chamber housing

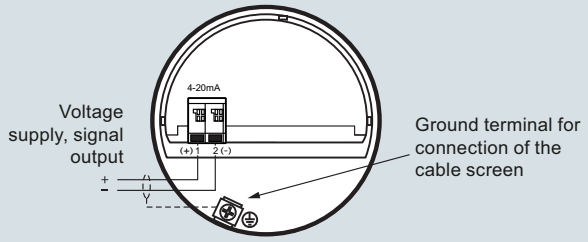

Note: All 2-wire HART connections and electronics are also available with SIL qualification.

SITRANS LG series connections

4-wire HART electronic option, electronics compartment, double chamber housing

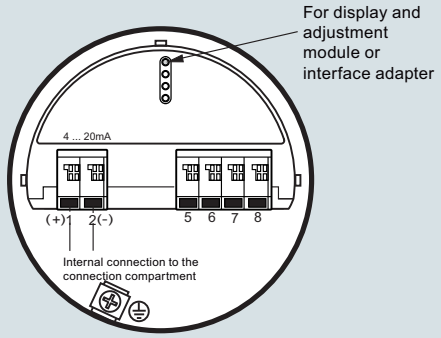

4-wire electronic option, connection compartment, double chamber housing with mains voltage

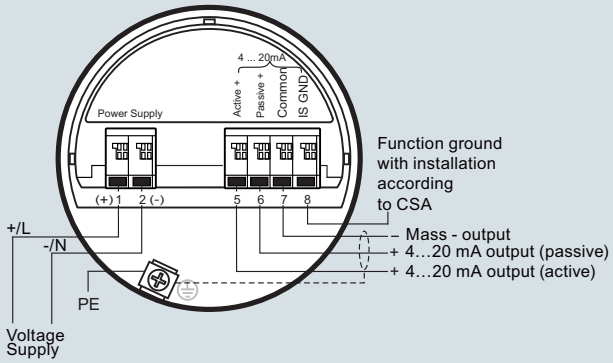

SITRANS LG series connections

© Siemens 2020

Circuit diagrams (continued)

Supplementary electronics

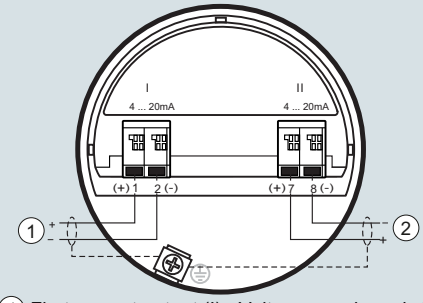

1 First current output (I) - Voltage supply and signal output (HART)
2 Second current output (II) - Voltage supply and signal output (without HART)

Connection compartment with low voltage

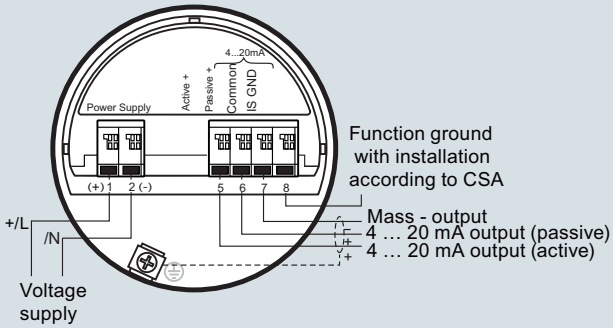

SITRANS LG series connections

Modbus electronic option, connection compartment

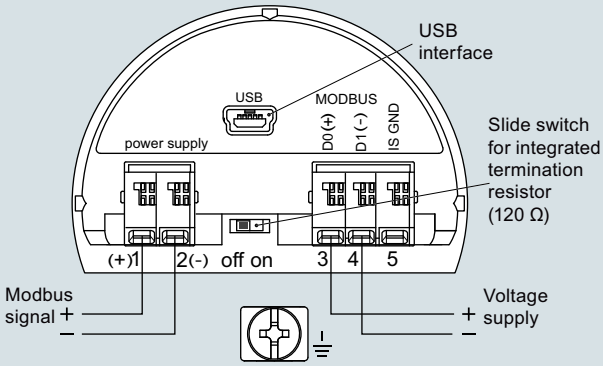

Modbus electronic option, electronics compartment, double chamber housing

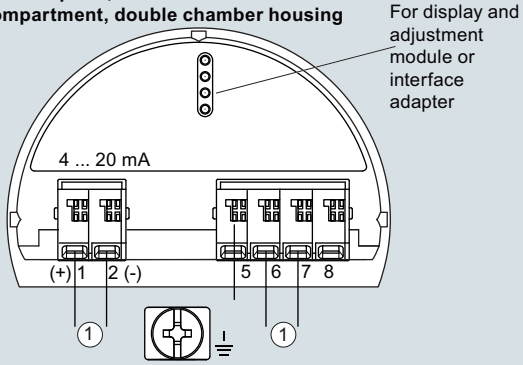

1 Internal connection to the connection compartment

SITRANS LG series connections

PROFIBUS electronic option, connection compartment, double chamber housing

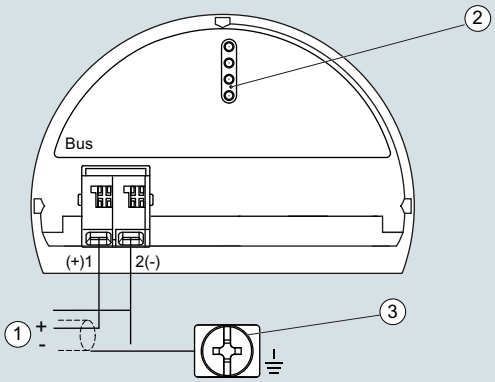

1 Voltage supply, signal output
2 For display and adjustment module or interface adapter
3 Ground terminal for connection of the cable screen

PROFIBUS electronic option, electronics compartment, double chamber housing

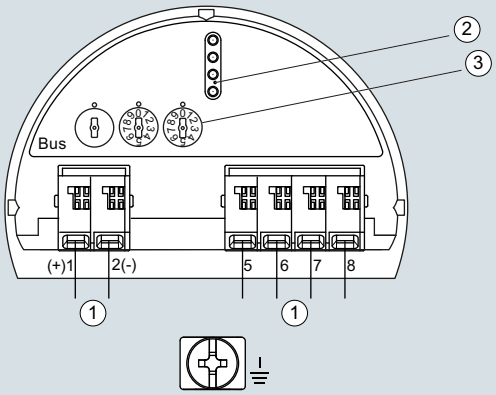

1 Internal connection to the connection compartment
2 Contact pins for the display and adjustment module or interface adapter
3 Selection switch for bus address

LG series connections

© Siemens 2020

Circuit diagrams (continued)

PROFIBUS electronic option, electronics and connection compartment, single chamber housing

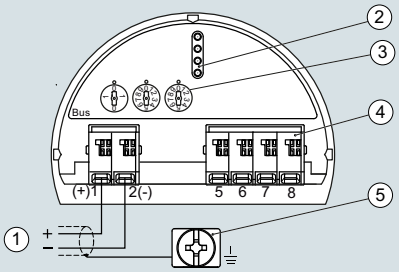

1. Voltage supply, signal output
2. For display and adjustment module or interface adapter
3. Selection switch for bus address
4. For external display and adjustment unit
5. Ground terminal for connection of the cable screen

LG series connections

LG series, FOUNDATION Fieldbus electronic option, electronic and terminal compartment, single chamber housing

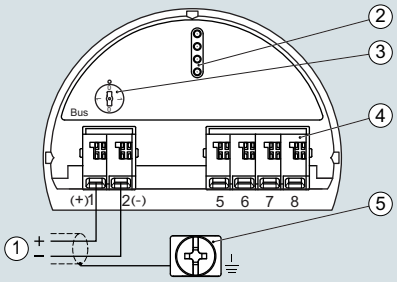

1. Voltage supply, signal output
2. Contact pins for the display and adjustment module or interface adapter
3. Simulation switch ("1" = mode for simulation release)
4. For external display and adjustment unit
5. Ground terminal for connection of the cable screen

LG series connections

LG series, FOUNDATION Fieldbus electronic option, electronic compartment, double chamber housing

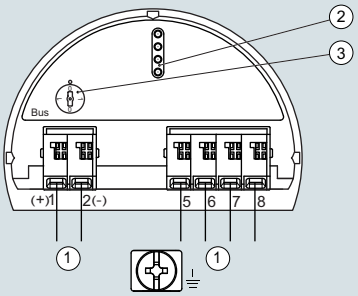

1. Internal connection to the connection compartment
2. Contact pins for the display and adjustment module or interface adapter
3. Simulation switch ("on" = simulation mode)

LG series, FOUNDATION Fieldbus electronic option, terminal compartment, double chamber housing

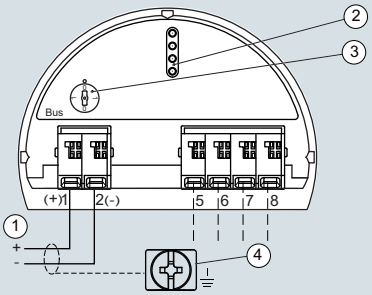

1. Voltage supply, signal output
2. For display and adjustment module or interface adapter
3. For external display and adjustment unit
4. Ground terminal for connection of the cable screen

LG series connections

© Siemens 2020

Overview

SITRANS LC300 is an inverse frequency shift capacitance continuous level transmitter for liquid, interface, and solid applications. It is ideal for standard industrial applications in chemical, hydrocarbon processing, food and beverage, water, wastewater, mining, aggregate, and cement industries.

Benefits

- Active-Shield technology so measurement is unaffected by material buildup in active shield section
- Highly accurate and reliable PFA-lined probes
- Integrated local LCD display
- 2-wire (4 to 20 mA) current loop design
- Current signaling according to NAMUR NE 43
- Push-button calibration and programming
- Stilling well (ground tube) version for low dielectric media, agitated materials, and non-metallic vessels

Application

SITRANS LC300 is a 2-wire level measurement instrument combining a sophisticated, yet easy-to-adjust microprocessor with field-proven probes. It is available in four versions: rod, rod with stilling well, cable with PFA insulation, and cable without PFA insulation.

Materials with low or high dielectric properties are accurately measured and Active-Shield technology helps in ignoring the effects of buildup or condensation near vessel nozzle.

- Key Applications: conductive (dK ≥ 20) and non-conductive (dK < 20) media including: liquids and solids in standard industrial processes, bulk solids applications involving dust, and chemical processes involving vapor

Probe Applications	
Rod version	Conductive liquids, slurries or solids
Rod version with stilling well	• Conductive liquids or slurries in non-conductive tanks • Non-conductive liquids in non-conductive tanks • Tanks with agitation or turbulent liquids • Liquids with a dielectric constant below 2 • Non-linear tanks, such as parabolic or spherical tanks • Interface measurements
Cable version	Non-conductive solids or liquids
PFA coated cable version	Conductive or sticky liquids, slurries or solids

Configuration

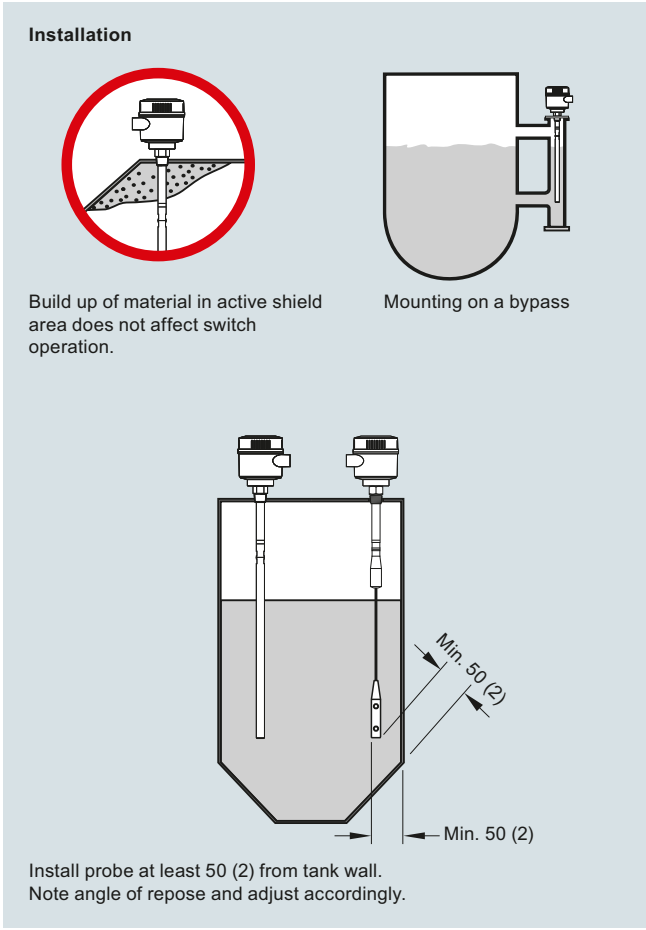

SITRANS LC300 installation, dimensions in mm (inch)

4

© Siemens 2020

Technical specifications

Input	
Measuring range	1.66 ... 3 300 pF
Span	Min. 3.3 pF
Output	
Loop current	Continuous signal 4 ... 20 mA/20 ... 4 mA according to NAMUR 43
Accuracy (transmitter)	
Temperature stability	0.25 % of actual capacitance value
Non-linearity and repeatability	< 0.4 % of full scale and actual measurement value
Accuracy	Deviation < 0.5 % of actual measurement value
Rated operating conditions[1]	
Ambient conditions	
• Ambient temperature	-40 ... +85 °C (-40 ... +185 °F)[2][3]
• Storage temperature	-40 ... +85 °C (-40 ... +185 °F)
• Installation category	I
• Pollution degree	4
• Ingress protection	Type 4/NEMA 4/IP65 (optional IP68)
Installation conditions	
• Location	Indoor/outdoor
• Process pressure	-1 ... +35 bar g (-14.6 ... +511 psi g)
• Process temperature	-40 ... +200 °C (-40 ... +392 °F)[4]
• Min. dielectric constant ε_r	1.5
• Min. difference in dielectric constant for interface measurement	5
Design	
Material	
• Enclosure	Aluminum, epoxy-coated
Probe diameter	
• Rod version	19 mm (0.75 inch) with PFA jacket
• Cable version	9 mm (0.35 inch) with PFA jacket, 6 mm (0.24 inch) without PFA jacket
Active shield length	
• Rod version	Threaded: 120 mm (4.72 inch) Flanged: 100 mm (3.94 inch)
• Cable version	Threaded: 125 mm (4.92 inch) Flanged: 105 mm (4.13 inch)
Process connection of probe	
• Threaded rod mounting	¾",1",1¼", 1½" NPT [(Taper), ANSI/ASME B1.20.1] R ¾",1", 1½" [(BSPT), EN 10226/PT (JIS-T), JIS B 0203] G ¾", 1", 1½" [(BSPP), EN ISO 228-1/PF (JIS-P), JIS B 0202]
• Threaded cable mounting	1½" NPT [(Taper), ANSI/ASME B1.20.1] R 1½" [(BSPT), EN 10226/PT (JIS-T), JIS B 0203] G 1½" [(BSPP), EN ISO 228-1/PF (JIS-P), JIS B 0202]
• Flange mounting	1 ... 4" ASME, DN 25 ... 100
Enclosure cable inlet	2 x ½" NPT or 2 x M20 x 1.5

Power supply	12 ... 30 V DC any polarity, 2-wire current loop circuit
User Interface	
Display	Local LCD, 4 digit, each 0 ... 9 and limited alpha characters
Safety	
Measurement current signaling	According to NAMUR NE 43, signal 3.8 ... 20.5 mA, fault ≤ 3.6 or ≥ 21 mA (22 mA)
Certificates and approvals	
General	CE, $CSA_{US/C}$, FM, RCM, KCC, EAC
Dust Ignition Proof (Intrinsically Safe probe circuit)	
• Canada/USA	FM/CSA: Class II, Div. 1, Groups E, F, G Class III T4
• Europe	ATEX ½ D T100 °C
Flame Proof (Intrinsically Safe probe circuit)	
• Europe	ATEX II ½ G EEx d [ia] IIC T6 ... T1 ATEX II ½ D T100 °C
• Brazil	Ex d [ia Ga] IIC T6 … T4 Gb Ex tb IIIC T85 °C … T100 °C Db IP65/IP68
• Russia/Kazakhstan	EAC Ex
Explosion Proof (Intrinsically Safe probe circuit)	
• Canada/USA	Class I, Div. 1, Groups A, B, C, D Class II, Div. 1, Groups E, F, G Class III T4
Marine	ABS Type Approval, Lloyds Register
Overfill Protection	AIB-Vincotte
Other	Pattern Approval (AQSIQ, China), CRN, PED

1) When operation is in areas classified as hazardous, observe restrictions according to relevant certificate. See also Pressure/Temperature curves on page 5/16.

2) Thermal isolator is used if process connection temperature exceeds 85 °C (185 °F)

3) Minimum voltage of 15 V DC is required for use at -40 °C (-40 °F)

4) Not suitable for steam environments

Design: Probe

	Rod version	Stilling well version	Cable version
Length	Min. 300 mm (12 inch), max. 5 000 mm (197 inch)	Min. 300 mm (12 inch), max. 5 000 mm (197 inch)	Min. 1 000 mm (40 inch), max. 25 000 mm (984 inch)
Sensor wetted parts	PFA, 316L stainless steel	PFA, 316L stainless steel	316L stainless steel or 316L stainless steel with PFA insulation
O-ring seal material	FKM or FFKM	FKM or FFKM	FKM or FFKM
Thermal isolator	Optional	Optional	Optional
Options	N/A	N/A	Mounting eye for PFA insulated cable version

© Siemens 2020

Selection and ordering data

	Article No.
SITRANS LC300 Capacitance level transmitter, rod design ↗	**7ML5670-** ■■■■■-■■■0
Continuous, contact, monitors level or interface in liquids or solids. Extension options up to 5 m (16.40 ft).	
↗ Click on the Article No. for the online configuration in the PIA Life Cycle Portal.	
Process connection	
Threaded, 316L stainless steel	
¾" NPT [(Taper), ANSI/ASME B1.20.1]	0 A
1" NPT [(Taper), ANSI/ASME B1.20.1]	0 B
1¼" NPT [(Taper), ANSI/ASME B1.20.1]	0 C
1½" NPT [(Taper), ANSI/ASME B1.20.1]	0 D
R ¾" [(BSPT), EN 10226/PT (JIS-T), JIS B 0203]	1 A
R 1" [(BSPT), EN 10226/PT (JIS-T), JIS B 0203]	1 B
R 1½" [(BSPT), EN 10226/PT (JIS-T), JIS B 0203]	1 D
G ¾" [(BSPP), EN ISO 228-1/PF (JIS-P), JIS B 0202]	3 A
G 1" [(BSPP), EN ISO 228-1/PF (JIS-P), JIS B 0202]	3 B
G 1½" [(BSPP), EN ISO 228-1/PF (JIS-P), JIS B 0202]	3 D
Welded flange, 316L stainless steel, raised face[1]	
1" ASME, 150 lb	5 A
1" ASME, 300 lb	5 B
1" ASME, 600 lb	5 C
1½" ASME, 150 lb	5 D
1½" ASME, 300 lb	5 E
1½" ASME, 600 lb	5 F
2" ASME, 150 lb	5 G
2" ASME, 300 lb	5 H
2" ASME, 600 lb	5 J
3" ASME, 150 lb	5 K
3" ASME, 300 lb	5 L
3" ASME, 600 lb	5 M
4" ASME, 150 lb	5 N
4" ASME, 300 lb	5 P
4" ASME, 600 lb	5 Q
Welded flange, 316L stainless steel, Type A flat faced[1]	
DN 25, PN 16	6 A
DN 25, PN 40	6 B
DN 40, PN 16	6 C
DN 40, PN 40	6 D
DN 50, PN 16	6 E
DN 50, PN 40	6 F
DN 80, PN 16	6 G
DN 80, PN 40	6 H
DN 100, PN 16	6 J
DN 100, PN 40	6 K
Sanitary, hastelloy, duplex or other custom process connections available. Please contact a local sales person for details. For more information, please visit http://www.automation.siemens.com/aspa_app.	

	Article No.
SITRANS LC300 Capacitance level transmitter, rod design	**7ML5670-** ■■■■■-■■■0
Continuous, contact, monitors level or interface in liquids or solids. Extension options up to 5 m (16.40 ft).	
Probe Length (from flange face or including process thread)	
Add Order code Y01 and plain text: "Insertion length ... mm"	
300 ... 1 000 mm (11.81 ... 39.37 inch)	A
1 001 ... 2 000 mm (39.41 ... 78.74 inch)	B
2 001 ... 3 000 mm (78.78 ... 118.11 inch)	C
3 001 ... 4 000 mm (118.15 ... 157.48 inch)	D
4 001 ... 5 000 mm (157.52 ... 196.85 inch)	E
Bent probes also available. Please contact a local sales person for details. For more information, please visit http://www.automation.siemens.com/aspa_app.	
Thermal isolator	
Without thermal isolator	0
With thermal isolator [for process connection temperatures over 85 °C (185 °F)]	1
Wetted seals	
FKM	0
FFKM [for process temperatures above -20 °C (4 °F)][2]	1
Probe material	
19 mm (0.75 inch) diameter 316L stainless steel, PFA lined rod	0
Approvals	
General Safety (CSA, FM, CE, RCM)	A
Dust Ignition Proof With IS Probe CE, RCM, ATEX II 1/2 D T100 °C	B
Flame Proof Enclosure With IS Probe CE, RCM, ATEX II 1/2 G EEx d [ia] IIC T6 ... T1, ATEX II 1/2 D T100 °C	C
Dust Ignition Proof With IS Probe CSA/FM Class II, Div. 1, Groups E, F, G CSA/FM Class III T4	D
Explosion Proof Enclosure With IS Probe CSA/FM Class I, Div. 1, Groups A, B, C, D CSA/FM Class II, Div. 1, Groups E, F, G CSA/FM Class III T4	E
Enclosure	
Aluminum epoxy coated 2 x ½" NPT via adapter - cable inlet, IP65	A
Aluminum epoxy coated 2 x M20 x 1.5 cable inlet, IP65	B
Aluminum epoxy coated 2 x ½" NPT via adapter - cable inlet, IP68	C
Aluminum epoxy coated 2 x M20 x 1.5 cable inlet, IP68	D
Stainless steel, contact local sales person for details. For more information, please visit http://www.automation.siemens.com/aspa_app	

[1] Flange bolting patterns and facings dimensionally correspond to the applicable ASME B16.5 or EN 1092-1 standard.

[2] Not available with FM approvals.

© Siemens 2020

Selection and ordering data

	Order code
Further designs	
Please add "**-Z**" to Article No. and specify Order code(s).	
Insertion length, specify in plain text: Y01: ... mm	**Y01**
Stainless steel tag [70 x 13 mm (2.75 x 0.5 inch)]: Measuring-point number/identification (max. 27 characters) specify in plain text	**Y15**
Manufacturer's Test Certificate: M to DIN 55350, Part 18 and to ISO 9000	**C11**
Material inspection Certificate Type 3.1 per EN 10204	**C12**
INMETRO[1)]	**E34**
Operating Instructions	
All literature is available to download for free, in a range of languages, at	

http://www.siemens.com/processinstrumentation/documentation

Accessories	Article No.
Electronic transmitter kit (includes transmitter and driver)	**7ML1830-1KN**
SITRANS RD100, loop powered display - see Chapter 7	**7ML5741-.....-.**
SITRANS RD150, remote digital display for 4 ... 20 mA and HART devices - see Chapter 7	**7ML5742-.....-....**
SITRANS RD200, universal input display with Modbus conversion - see Chapter 7	**7ML5740-.....-..**
SITRANS RD300, dual line display with totalizer and linearization curve and Modbus conversion - see Chapter 7	**7ML5744-.....-..**
For applicable back up point level switch - see point level measurement section	

1) Available only with Approvals options A and B.

© Siemens 2020

Selection and ordering data

	Article No.									
SITRANS LC300 Capacitance level transmitter, stilling well design ↗	**7ML5671-**									
	■	■	■	■	■	-	■	■	■	**0**
Continuous, contact, monitors level or interface in liquids. Extension options up to 5 m (16.40 ft).										
↗ Click on the Article No. for the online configuration in the PIA Life Cycle Portal.										
Process connection										
Threaded, 316L stainless steel										
1½" NPT [(Taper), ANSI/ASME B1.20.1]	**0**	**D**								
R 1½" [(BSPT), EN 10226/PT (JIS-T), JIS B 0203]	**1**	**D**								
G 1½" [(BSPP), EN ISO 228-1/PF (JIS-P), JIS B 0202]	**3**	**D**								
Welded flange, 316L stainless steel, raised face[1]										
1½" ASME, 150 lb	**5**	**D**								
1½" ASME, 300 lb	**5**	**E**								
1½" ASME, 600 lb	**5**	**F**								
2" ASME, 150 lb	**5**	**G**								
2" ASME, 300 lb	**5**	**H**								
2" ASME, 600 lb	**5**	**J**								
3" ASME, 150 lb	**5**	**K**								
3" ASME, 300 lb	**5**	**L**								
3" ASME, 600 lb	**5**	**M**								
4" ASME, 150 lb	**5**	**N**								
4" ASME, 300 lb	**5**	**P**								
4" ASME, 600 lb	**5**	**Q**								
Welded flange, 316L stainless steel, Type A flat faced[1]										
DN 40, PN 16	**6**	**C**								
DN 40, PN 40	**6**	**D**								
DN 50, PN 16	**6**	**E**								
DN 50, PN 40	**6**	**F**								
DN 80, PN 16	**6**	**G**								
DN 80, PN 40	**6**	**H**								
DN 100, PN 16	**6**	**J**								
DN 100, PN 40	**6**	**K**								
Sanitary, hastelloy, duplex or other custom process connections available.										
Please contact a local sales person for details. For more information, please visit http://www.automation.siemens.com/aspa_app.										
Probe Length (from flange face or including process thread)										
Add Order code Y01 and plain text: "Insertion length ... mm"										
300 ... 1 000 mm (11.81 ... 39.37 inch)			**A**							
1 001 ... 2 000 mm (39.41 ... 78.74 inch)			**B**							
2 001 ... 3 000 mm (78.78 ... 118.11 inch)			**C**							
3 001 ... 4 000 mm (118.15 ... 157.48 inch)			**D**							
4 001 ... 5 000 mm (157.52 ... 196.85 inch)			**E**							
Thermal isolator										
Without thermal isolator				**0**						
With thermal isolator [for process connection temperatures over 85 °C (185 °F)]				**1**						
Wetted seals										
FKM					**0**					
FFKM [for process temperatures above -20 °C (4 °F)][2]					**1**					
Probe material										
35 mm (1.38 inch) diameter stilling well, with 19 mm (0.75 inch) diameter 316L stainless steel, PFA lined rod with PTFE spacers							**1**			

	Article No.									
SITRANS LC300 Capacitance level transmitter, stilling well design	**7ML5671-**									
	■	■	■	■	■	-	■	■	■	**0**
Continuous, contact, monitors level or interface in liquids. Extension options up to 5 m (16.40 ft).										
Approvals										
General Safety (CSA, FM, CE, RCM)								**A**		
Dust Ignition Proof With IS Probe CE, RCM, ATEX II 1/2 D T100 °C								**B**		
Flame Proof Enclosure With IS Probe CE, RCM, ATEX II 1/2 G EEx d [ia] IIC T6 ... T1, ATEX II 1/2 D T100 °C								**C**		
Dust Ignition Proof With IS Probe CSA/FM Class II, Div. 1, Groups E, F, G CSA/FM Class III T4								**D**		
Explosion Proof Enclosure With IS Probe CSA/FM Class I, Div. 1, Groups A, B, C, D CSA/FM Class II, Div. 1, Groups E, F, G CSA/FM Class III T4								**E**		
Enclosure										
Aluminum epoxy coated 2 x ½" NPT via adapter - cable inlet, IP65									**A**	
Aluminum epoxy coated 2 x M20 x 1.5 cable inlet, IP65									**B**	
Aluminum epoxy coated 2 x ½" NPT via adapter - cable inlet, IP68									**C**	
Aluminum epoxy coated 2 x M20 x 1.5 cable inlet, IP68									**D**	
Stainless steel, please contact a local sales person for details. For more information, please visit http://www.automation.siemens.com/aspa_app.										

[1] Flange bolting patterns and facings dimensionally correspond to the applicable ASME B16.5 or EN 1092-1 standard.

[2] Not available with FM approvals.

Further designs	Order code
Please add "**-Z**" to Article No. and specify Order code(s).	
Insertion length, specify in plain text: Y01: ... mm	**Y01**
Stainless steel tag [70 x 13 mm (2.75 x 0.5 inch)]: Measuring-point number/identification (max. 27 characters) specify in plain text	**Y15**
Manufacturer's Test Certificate: M to DIN 55350, Part 18 and to ISO 9000	**C11**
Material inspection Certificate Type 3.1 per EN 10204	**C12**
INMMETRO[1]	**E34**
Operating Instructions	
All literature is available to download for free, in a range of languages, at	

http://www.siemens.com/processinstrumentation/documentation

Accessories	Article No.
Electronic transmitter kit (includes transmitter and driver)	**7ML1830-1KN**
SITRANS RD100, loop powered display - see Chapter 7	**7ML5741-.....-.**
SITRANS RD150, remote digital display for 4 ... 20 mA and HART devices - see Chapter 7	**7ML5742-.....-....**
SITRANS RD200, universal input display with Modbus conversion - see Chapter 7	**7ML5740-.....-..**
SITRANS RD300, dual line display with totalizer and linearization curve and Modbus conversion - see Chapter 7	**7ML5744-.....-..**
For applicable back up point level switch - see point level measurement section	

[1] Available only with Approvals options A and B.

© Siemens 2020

Selection and ordering data

	Article No.
SITRANS LC300 Capacitance level transmitter, cable design ↗	**7ML5672-** ■ ■ ■ ■ ■ - ■ ■ ■ **0**
Continuous, contact, monitors level or interface in liquids or solids. Extension options up to 25 m (82.02 ft).	
↗ Click on the Article No. for the online configuration in the PIA Life Cycle Portal.	
Process connection	
Threaded, 316L stainless steel	
1½" NPT [(Taper), ANSI/ASME B1.20.1]	**0 D**
R 1½" [(BSPT), EN 10226/PT (JIS-T), JIS B 0203]	**1 D**
G 1½" [(BSPP), EN ISO 228-1/PF (JIS-P), JIS B 0202]	**3 D**
Welded flange, 316L stainless steel, raised face[1]	
1½" ASME, 150 lb	**5 D**
1½" ASME, 300 lb	**5 E**
1½" ASME, 600 lb	**5 F**
2" ASME, 150 lb	**5 G**
2" ASME, 300 lb	**5 H**
2" ASME, 600 lb	**5 J**
3" ASME, 150 lb	**5 K**
3" ASME, 300 lb	**5 L**
3" ASME, 600 lb	**5 M**
4" ASME, 150 lb	**5 N**
4" ASME, 300 lb	**5 P**
4" ASME, 600 lb	**5 Q**
Welded flange, 316L stainless steel, Type A flat faced[1]	
DN 40, PN 16	**6 C**
DN 40, PN 40	**6 D**
DN 50, PN 16	**6 E**
DN 50, PN 40	**6 F**
DN 80, PN 16	**6 G**
DN 80, PN 40	**6 H**
DN 100, PN 16	**6 J**
DN 100, PN 40	**6 K**
Sanitary, hastelloy, duplex or other custom process connections available.	
Please contact a local sales person for details. For more information, please visit http://www.automation.siemens.com/aspa_app.	
Probe Length (from flange face or including process thread)	
Add Order code Y01 and plain text: "Insertion length ... mm"	
1 000 ... 2 000 mm (39.37 ... 78.74 inch)	**A**
2 001 ... 4 000 mm (78.78 ... 157.48 inch)	**B**
4 001 ... 6 000 mm (157.52 ... 236.22 inch)	**C**
6 001 ... 8 000 mm (236.26 ... 314.96 inch)	**D**
8 001 ... 10 000 mm (315.00 ... 393.70 inch)	**E**
8 001 ... 10 000 mm (315.00 ... 393.70 inch)	**F**
12 001 ... 14 000 mm (472.48 ... 551.18 inch)	**G**
14 001 ... 16 000 mm (551.22 ... 629.92 inch)[2]	**H**
16 001 ... 18 000 mm (629.96 ... 708.66 inch)[2]	**J**
18 001 ... 20 000 mm (708.70 ... 787.40 inch)[2]	**K**
20 001 ... 22 000 mm (787.44 ... 866.14 inch)[2]	**L**
22 001 ... 24 000 mm (866.18 ... 944.88 inch)[2]	**M**
24 001 ... 25 000 mm (944.92 ... 984.25 inch)[2]	**N**
Thermal isolator	
Without thermal isolator	**0**
With thermal isolator [for process connection temperatures over 85 °C (185 °F)]	**1**
Wetted seals	
FKM	**0**
FFKM [for process temperatures above -20 °C (4 °F)][3]	**1**

	Article No.
SITRANS LC300 Capacitance level transmitter, cable design	**7ML5672-** ■ ■ ■ ■ ■ - ■ ■ ■ **0**
Continuous, contact, monitors level or interface in liquids or solids. Extension options up to 25 m (82.02 ft).	
Probe material	
Bare 316L stainless steel cable and 316L stainless steel cable weight, tinned copper crimp, PTFE backing ring, PEEK isolator and PFA lined active shield	**0**
Approvals	
General Safety (CSA, FM, CE, RCM)	**A**
Dust Ignition Proof With IS Probe CE, RCM, ATEX II 1/2 D T100 °C	**B**
Flame Proof Enclosure With IS Probe CE, RCM, ATEX II 1/2 G EEx d [ia] IIC T6 ... T1, ATEX II 1/2 D T100 °C	**C**
Dust Ignition Proof With IS Probe CSA/FM Class II, Div. 1, Groups E, F, G CSA/FM Class III T4	**D**
Explosion Proof Enclosure With IS Probe CSA/FM Class I, Div. 1, Groups A, B, C, D CSA/FM Class II, Div. 1, Groups E, F, G CSA/FM Class III T4	**E**
Enclosure	
Aluminum epoxy coated 2 x ½" NPT via adapter - cable inlet, IP65	**A**
Aluminum epoxy coated 2 x M20 x 1.5 cable inlet, IP65	**B**
Aluminum epoxy coated 2 x ½" NPT via adapter - cable inlet, IP68	**C**
Aluminum epoxy coated 2 x M20 x 1.5 cable inlet, IP68	**D**
Stainless steel, please contact a local sales person for details. For more information, please visit http://www.automation.siemens.com/aspa_app.	

[1] Flange bolting patterns and facings dimensionally correspond to the applicable ASME B16.5 or EN 1092-1 standard.

[2] Cable lengths from 15 000 mm (590.55 inch) to 25 000 mm (984.25 inch) can be used in non-conductive media. Contact Factory for assistance.

[3] Not available with FM approvals.

© Siemens 2020

Selection and ordering data	Order code
Further designs	
Please add "**-Z**" to Article No. and specify Order code(s).	
Insertion length, specify in plain text: Y01: ... mm	**Y01**
Stainless steel tag [70 x 13 mm (2.75 x 0.5 inch)]: Measuring-point number/identification (max. 27 characters) specify in plain text	**Y15**
Manufacturer's Test Certificate: M to DIN 55350, Part 18 and to ISO 9000	**C11**
Material inspection Certificate Type 3.1 per EN 10204	**C12**
INMETRO[1)]	**E34**
Operating Instructions	
All literature is available to download for free, in a range of languages, at	

http://www.siemens.com/processinstrumentation/documentation

Accessories	Article No.
Electronic transmitter kit (includes transmitter and driver)	**7ML1830-1KN**
SITRANS RD100, loop powered display - see Chapter 7	**7ML5741-.....-.**
SITRANS RD150, remote digital display for 4 ... 20 mA and HART devices - see Chapter 7	**7ML5742-.....-....**
SITRANS RD200, universal input display with Modbus conversion - see Chapter 7	**7ML5740-.....-..**
SITRANS RD300, dual line display with totalizer and linearization curve and Modbus conversion - see Chapter 7	**7ML5744-.....-..**
For applicable back up point level switch - s ee point level measurement section	

[1)] Available only with Approvals options A and B.

© Siemens 2020

Selection and ordering data

	Article No.
SITRANS LC300 Capacitance level transmitter, PFA coated cable design ↗	**7ML5673-** ■■■■■ - ■■■■■
Continuous, contact, monitors level or interface in liquids or solids. Extension options up to 25 m (82.02 ft).	
↗ Click on the Article No. for the online configuration in the PIA Life Cycle Portal.	
Process connection	
Threaded, 316L stainless steel	
1½" NPT [(Taper), ANSI/ASME B1.20.1]	**0 D**
R 1½" [(BSPT), EN 10226/PT (JIS-T), JIS B 0203]	**1 D**
G 1½" [(BSPP), EN ISO 228-1/PF (JIS-P), JIS B 0202]	**3 D**
Welded flange, 316L stainless steel, raised face[1]	
1½" ASME, 150 lb	**5 D**
1½" ASME, 300 lb	**5 E**
1½" ASME, 600 lb	**5 F**
2" ASME, 150 lb	**5 G**
2" ASME, 300 lb	**5 H**
2" ASME, 600 lb	**5 J**
3" ASME, 150 lb	**5 K**
3" ASME, 300 lb	**5 L**
3" ASME, 600 lb	**5 M**
4" ASME, 150 lb	**5 N**
4" ASME, 300 lb	**5 P**
4" ASME, 600 lb	**5 Q**
Welded flange, 316L stainless steel, Type A flat faced[1]	
DN 40, PN 16	**6 C**
DN 40, PN 40	**6 D**
DN 50, PN 16	**6 E**
DN 50, PN 40	**6 F**
DN 80, PN 16	**6 G**
DN 80, PN 40	**6 H**
DN 100, PN 16	**6 J**
DN 100, PN 40	**6 K**
Sanitary, hastelloy, duplex or other custom process connections available. Please contact a local sales person for details. For more information, please visit http://www.automation.siemens.com/aspa_app.	
Probe Length (from flange face or including process thread)	
Add Order code Y01 and plain text: "Insertion length ... mm"	
1 000 ... 2 000 mm (39.37 ... 78.74 inch)	**A**
2 001 ... 4 000 mm (78.78 ... 157.48 inch)	**B**
4 001 ... 6 000 mm (157.52 ... 236.22 inch)	**C**
6 001 ... 8 000 mm (236.26 ... 314.96 inch)	**D**
8 001 ... 10 000 mm (315.00 ... 393.70 inch)	**E**
10 001 ... 12 000 mm (393.74 ... 472.44 inch)	**F**
12 001 ... 14 000 mm (472.48 ... 551.18 inch)	**G**
14 001 ... 16 000 mm (551.22 ... 629.92 inch)[2]	**H**
16 001 ... 18 000 mm (629.96 ... 708.66 inch)[2]	**J**
18 001 ... 20 000 mm (708.70 ... 787.40 inch)[2]	**K**
20 001 ... 22 000 mm (787.44 ... 866.14 inch)[2]	**L**
22 001 ... 24 000 mm (866.18 ... 944.88 inch)[2]	**M**
24 001 ... 25 000 mm (944.92 ... 984.25 inch)[2]	**N**
Thermal isolator	
Without thermal isolator	**0**
With thermal isolator [for process connection temperatures over 85 °C (185 °F)]	**1**

	Article No.
SITRANS LC300 Capacitance level transmitter, PFA coated cable design	**7ML5673-** ■■■■■ - ■■■■■
Continuous, contact, monitors level or interface in liquids or solids. Extension options up to 25 m (82.02 ft).	
Wetted seals	
FKM	**0**
FFKM [for process temperatures above -20 °C (-4 °F)][3]	**1**
Probe material	
PFA coated cable and 316L stainless steel cable weight, PEEK isolator and PFA lined active shield	**1**
Approvals	
General Safety (CSA, FM, CE, RCM)	**A**
Dust Ignition Proof With IS Probe CE, RCM, ATEX II 1/2 D T100 °C	**B**
Flame Proof Enclosure With IS Probe CE, RCM, ATEX II 1/2 G EEx d [ia] IIC T6 ... T1, ATEX II 1/2 D T100 °C	**C**
Dust Ignition Proof With IS Probe CSA/FM Class II, Div. 1, Groups E, F, G CSA/FM Class III T4	**D**
Explosion Proof Enclosure With IS Probe CSA/FM Class I, Div. 1, Groups A, B, C, D CSA/FM Class II, Div. 1, Groups E, F, G CSA/FM Class III T4	**E**
Enclosure	
Aluminum epoxy coated 2 x ½" NPT via adapter - cable inlet, IP65	**A**
Aluminum epoxy coated 2 x M20 x 1.5 cable inlet, IP65	**B**
Aluminum epoxy coated 2 x ½" NPT via adapter - cable inlet, IP68	**C**
Aluminum epoxy coated 2 x M20 x 1.5 cable inlet, IP68	**D**
Stainless steel, please contact a local sales person for details. For more information, please visit http://www.automation.siemens.com/aspa_app.	
Mounting eye	
Without Mounting eye	**0**
With mounting eye	**1**

[1] Flange bolting patterns and facings dimensionally correspond to the - applicable ASME B16.5 or EN 1092-1 standard.

[2] Cable lengths from 15 000 mm (590.55 inch) to 25 000 mm (984.25 inch) can be used in non-conductive media. Contact Factory for assistance.

[3] Not available with FM approvals.

© Siemens 2020

Selection and ordering data

	Article No.
Further designs	
Please add "**-Z**" to Article No. and specify Order code(s).	
Insertion length, specify in plain text: Y01: ... mm	**Y01**
Stainless steel tag [70 x 13 mm (2.75 x 0.5 inch)]: Measuring-point number/identification (max. 27 characters) specify in plain text	**Y15**
Manufacturer's Test Certificate: M to DIN 55350, Part 18 and to ISO 9000	**C11**
Material inspection Certificate Type 3.1 per EN 10204	**C12**
INMETRO[1)]	**E34**
Operating Instructions	
All literature is available to download for free, in a range of languages, at	

http://www.siemens.com/processinstrumentation/documentation

Accessories	Article No.
Electronic transmitter kit (includes transmitter and driver)	**7ML1830-1KN**
SITRANS RD100, loop powered display - see Chapter 7	**7ML5741-.....-.**
SITRANS RD150, remote digital display for 4 ... 20 mA and HART devices - see Chapter 7	**7ML5742-.....-....**
SITRANS RD200, universal input display with Modbus conversion - see Chapter 7	**7ML5740-.....-..**
SITRANS RD300, dual line display with totalizer and linearization curve and Modbus conversion - see Chapter 7	**7ML5744-.....-..**
For applicable back up point level switch - see point level measurement section	

1) Available only with Approvals options A and B.

LC300 Specials[1)]	Article No.
LC300 Cable Extensions, 316L stainless steel	
Kit, Stainless steel cable extension, 1 m, adjustable by customer	**A5E01163688**
Kit, Stainless steel cable extension, 3 m, adjustable by customer	**A5E01163689**
Kit, Stainless steel cable extension, 5 m, adjustable by customer	**A5E01163690**
Kit, Stainless steel cable extension, 10 m, adjustable by customer	**A5E01163691**
Kit, Stainless steel cable extension, 15 m, adjustable by customer	**A5E01163693**
Kit, Stainless steel cable extension, 20 m, adjustable by customer	**A5E01163695**
LC300 Cable Extensions, 316 stainless steel with PFA coating	
Kit, PFA cable extension, 1 m	**A5E01163709**
Kit, PFA cable extension, 3 m	**A5E01163710**
Kit, PFA cable extension, 5 m	**A5E01163711**
Kit, PFA cable extension, 10 m	**A5E01163712**
Kit, PFA cable extension, 15 m	**A5E01163713**
Kit, PFA cable extension, 20 m	**A5E01163714**
LC300 Mounting Eye	
Spare mounting eye (LC300 PFA versions only)	**A5E01163717**
LC300 Weight Kit, 316L stainless steel	
Kit, Spare stainless steel weight. To be used in any cable version of CLS300, or stainless steel cable version of LC300	**A5E01163727**

Customers interested in a custom designed device should consult a local sales person. For more information, please visit http://www.automation.siemens.com/aspa_app.

© Siemens 2020

Characteristic curves

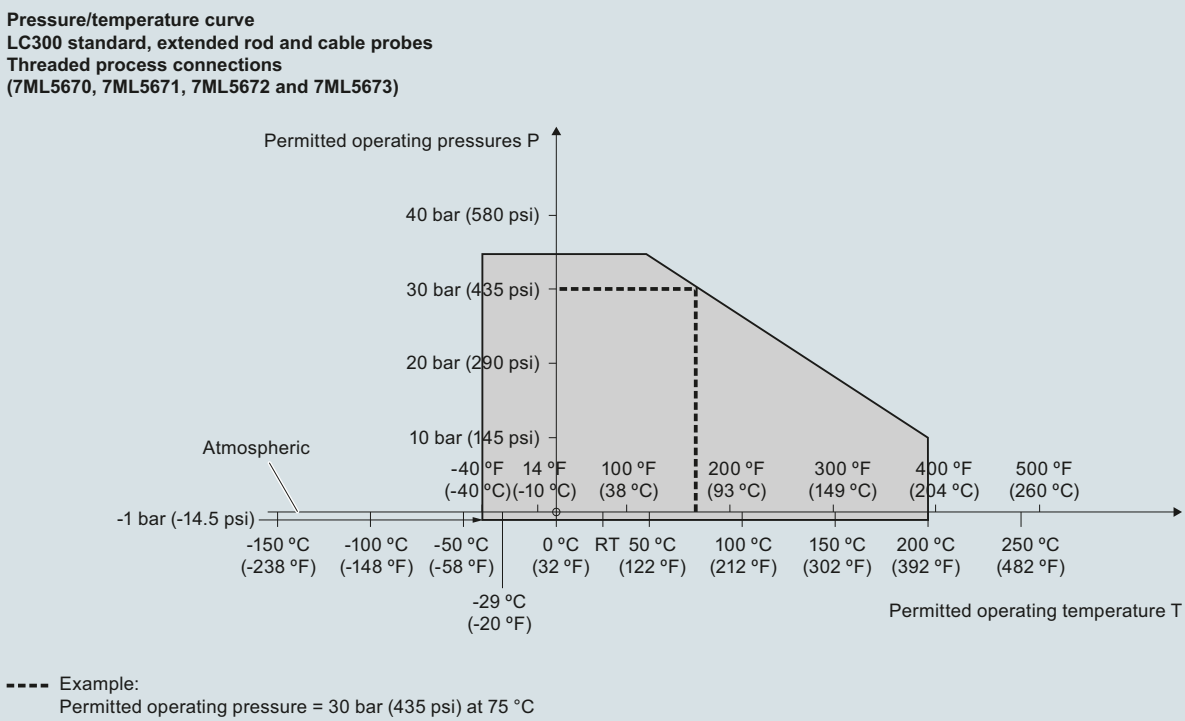

SITRANS LC300 process pressure/temperature derating curves (7ML5670, 7ML5671, 7ML5672, and 7ML5673))

© Siemens 2020

Characteristic curves (continued)

Pressure/temperature curve
LC300 standard, extended rod and cable probes
ASME flanged process connections
(7ML5670, 7ML5671, 7ML5672 and 7ML5673)

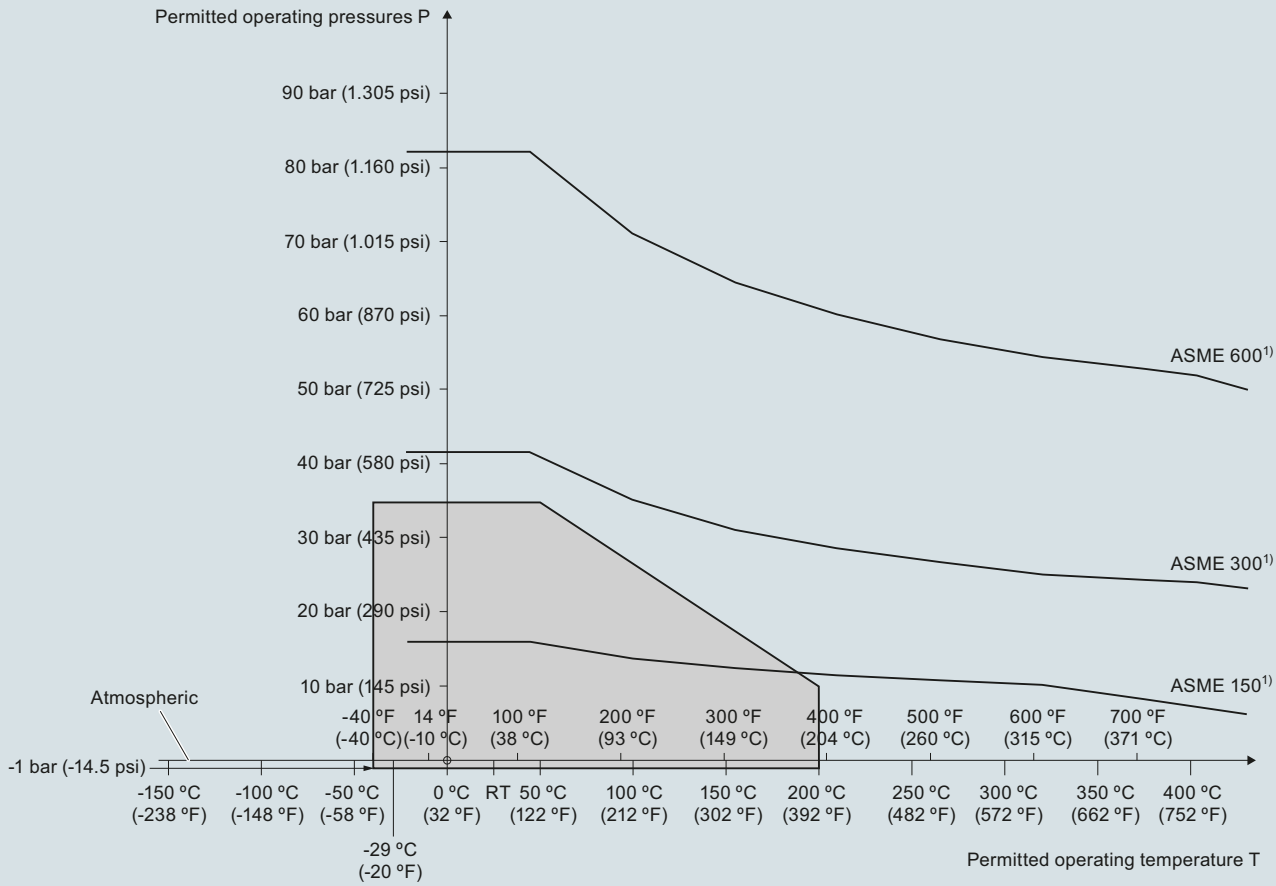

[1)] The curve denotes the minimum allowable flange class for the shaded area below.

SITRANS LC300 process pressure/temperature derating curves (7ML5670, 7ML5671, 7ML5672, and 7ML5673)

© Siemens 2020

Characteristic curves (continued)

Pressure/temperature curve
LC300 standard, extended rod and cable probes
EN flanged process connections
(7ML5670, 7ML5671, 7ML5672 and 7ML5673)

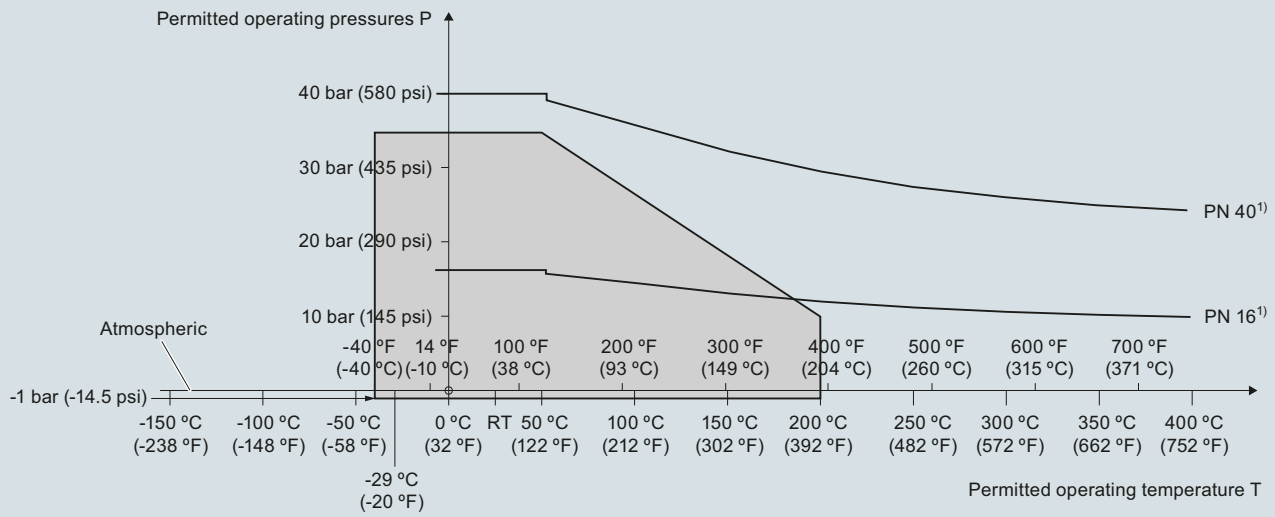

[1)] The curve denotes the minimum allowable flange class for the shaded area below.

SITRANS LC300 process pressure/temperature derating curves (7ML5670, 7ML5671, 7ML5672, and 7ML5673)

© Siemens 2020

Dimensional drawings

Threaded (7ML5670)

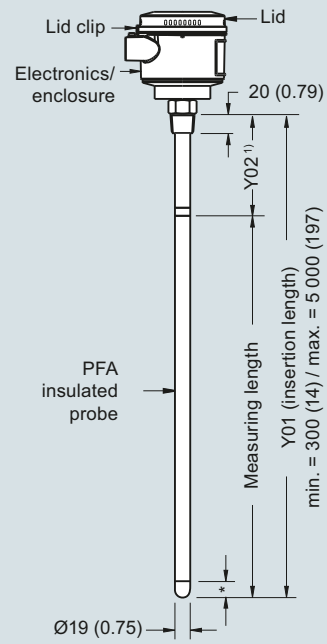

* = 30 (1.18) Inactive tip

Threaded (7ML5671)

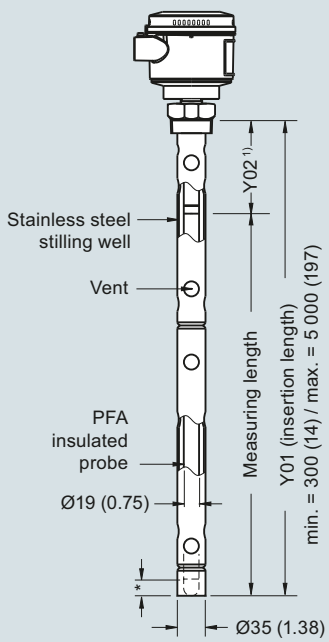

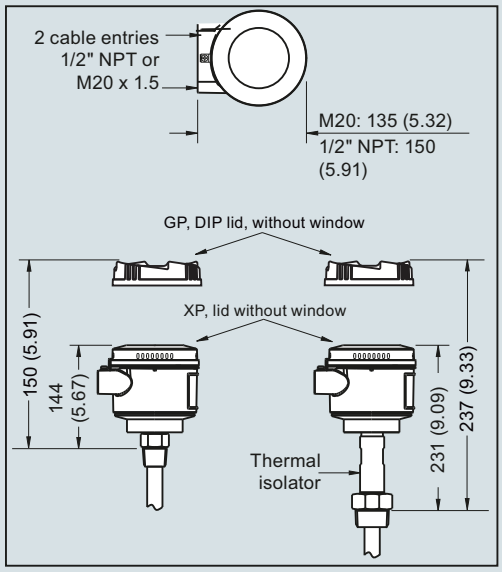

Note:

1) Rod version, threaded Y02 (including process connection): shield length = 120 (4.7).
2) For non-conductive applications only. Non-insulated cable can be shortened on site. Weight is included in measuring length.
3) For liquid and solid applications. Insulated cable cannot be shortened. Weight is **not** included in measuring length.
4) For conductive materials, the measuring length includes the exposed PFA insulated cable only. Any fluid contact with the upper rod assembly will result in a short circuit and incorrect readings.

Cable version, non-insulated[2)]
Threaded (7ML5672)

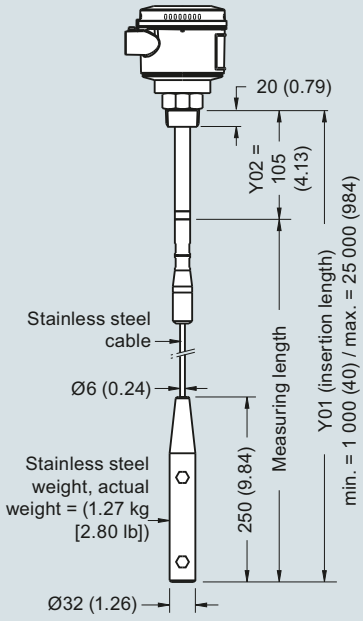

Cable version, insulated[3)]
Threaded (7ML5673)

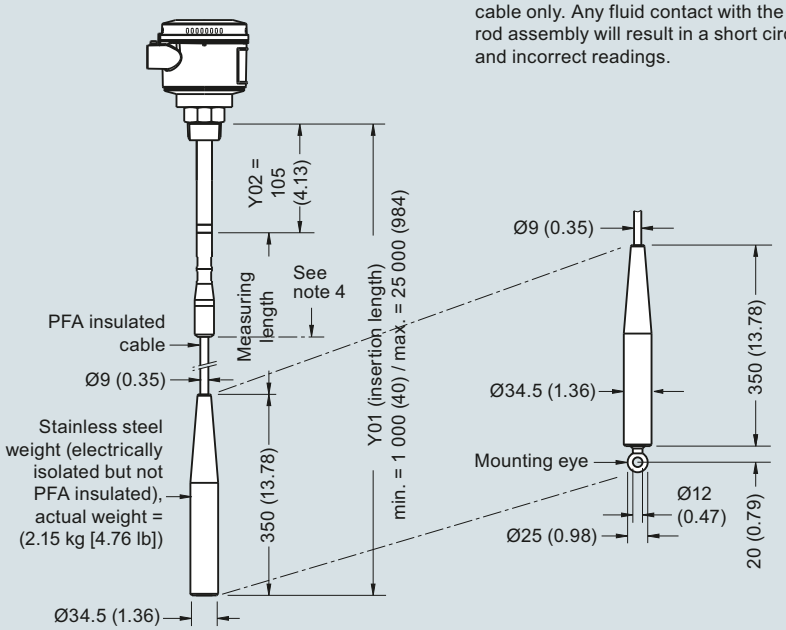

SITRANS LC300 threaded process connections, dimensions in mm (inch)

© Siemens 2020

Dimensional drawings (continued)

Welded Flange (7ML5670)

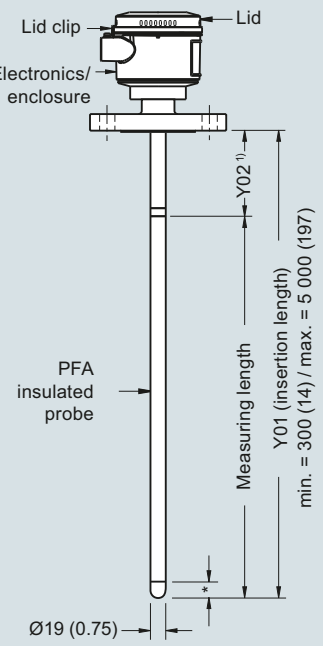

* = 30 (1.18) inactive tip

Welded Flange (7ML5671)

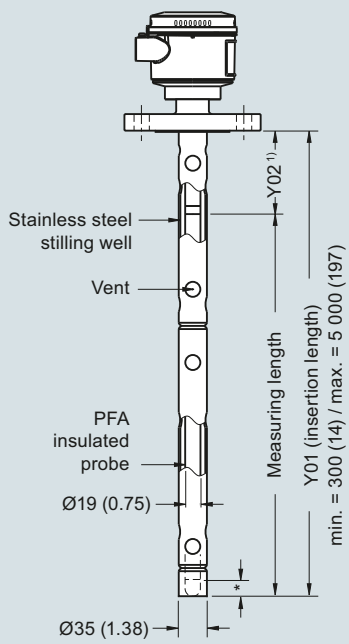

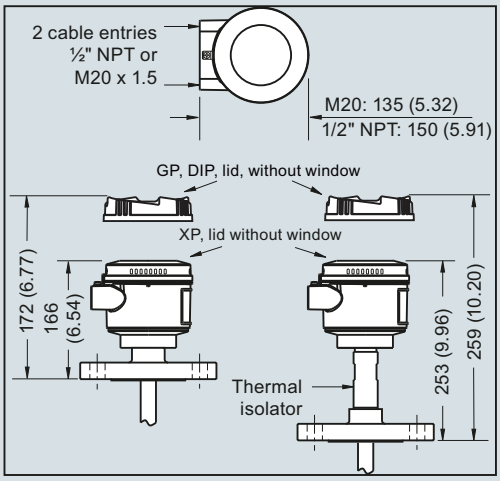

Flange Facing (raised face)	
Flange Class	**Facing thickness**
△ ASME 150/300	2 (0.08)
△ ASME 600/900	7 (0.28)
△ PN16/40	2 (0.08)

Notes:

1) Rod version, welded flange Y02: shield length = 100 (3.9).
2) For non-conductive applications only. Non-insulated cable can be shortened on site. Weight is included in measuring length.
3) For liquid and solid applications. Insulated cable cannot be shortened. Weight is **not** included in measuring length.
4) For conductive materials, the measuring length includes the exposed PFA insulated cable only. Any fluid contact with the upper rod assembly will result in a short circuit and incorrect readings.

Cable version, non-insulated 2)
Welded Flange (7ML5672)

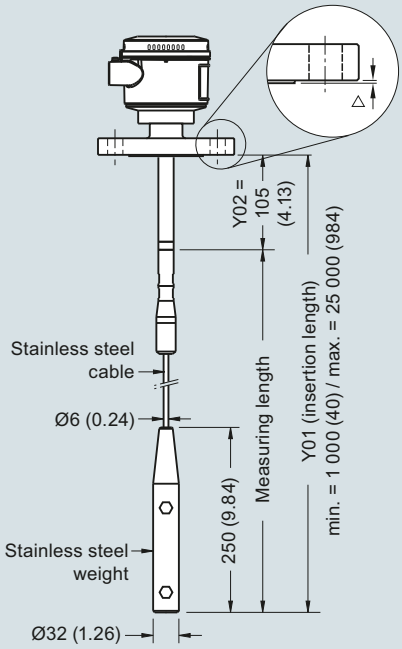

Cable version, insulated 3)
Welded Flange (7ML5673)

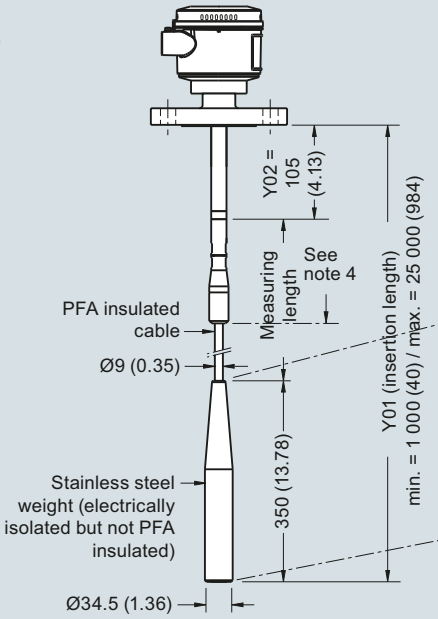

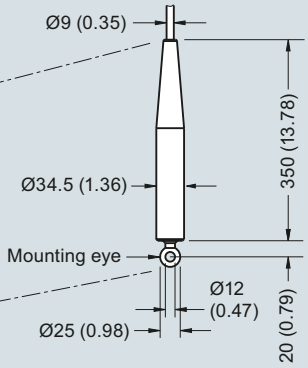

SITRANS LC300 flanged process connections, dimensions in mm (inch)

© Siemens 2020

Circuit diagrams

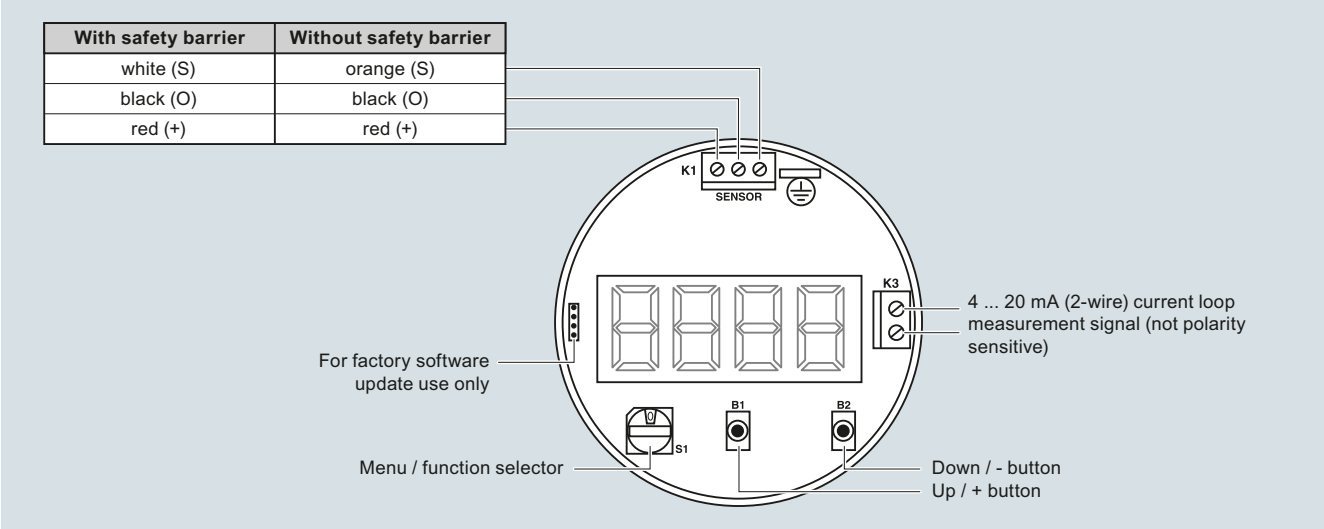

SITRANS LC300 connections

© Siemens 2020

Overview

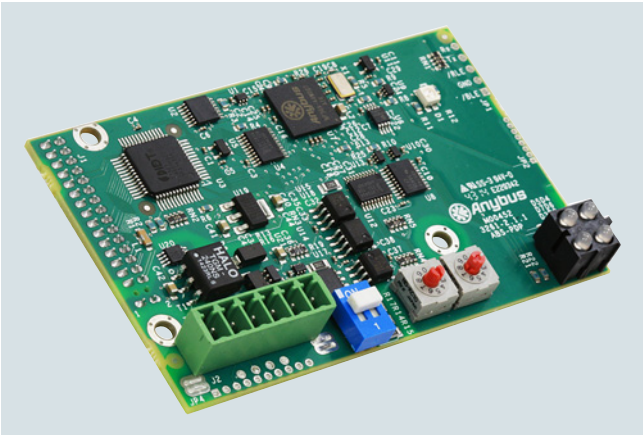

SmartLinx modules provide direct digital connection to popular industrial communications buses with true plug-and-play compatibility with products manufactured by Siemens.

Benefits

- Fast, easy installation
- Direct connection: no additional installation required
- Scaleable application layer allows for optimized network bandwidth and memory requirements (for PROFIBUS DP-V0 and DeviceNet only)
- Modules available for PROFIBUS DP-V0, PROFIBUS DP-V1, PROFINET, DeviceNet, Modbus TCP/IP, and EtherNet/IP

Application

With the addition of a SmartLinx module, Siemens instruments can be connected to a variety of industrial communications networks.

They're fast and easy to install, and can be added at any time. The module simply plugs into the socket on any SmartLinx enabled product. They require no secondary private buses or gateways and no separate wiring. There are no extra boxes to connect to your network so there's a minimum load on engineering and maintenance staff.

SmartLinx provides all data from the instrument, including measurement and status, and allows changes to operation parameters to be done over the bus or telemetry link. The user can select which data in the application layer to transfer over the bus. This selection saves bandwidth and memory and optimizes data throughput and speeds up the network, enabling you to connect more instruments to your network.

Selecting a communications module: PROFIBUS DP-V0 versus PROFIBUS DP-V1

The PROFIBUS DP-V1 card was added to MultiRanger 200 HMI and HydroRanger 200 HMI to provide acyclic communication and SIMATIC PDM support over PROFIBUS and PROFINET. For backward compatibility, the PROFIBUS DP-V0 card can also be used with MultiRanger 200 HMI and HydroRanger 200 HMI.

MultiRanger 100/200, HydroRanger 200, BW500/L, and SF500 are compatible only with the PROFIBUS DP-V0 module.

Technical specifications

Module type	PROFIBUS DP-V0
Interface	RS 485 (PROFIBUS standard)
Transmission rate	All valid PROFIBUS DP rates from 9 600 Kbps ... 12 Mbps
Slave address	0 ... 99
Connection	Slave
SmartLinx module compatibility	• MultiRanger 200 HMI • MultiRanger 100/200 • HydroRanger 200 HMI • HydroRanger 200 • Milltronics BW500, BW500/L • Milltronics SF500

Module type	PROFIBUS DP-V1
Interface	RS 485 (PROFIBUS standard)
Transmission rate	All valid PROFIBUS DP rates from 9 600 Kbps ... 12 Mbps
Slave address	0 ... 99
Connection	Slave
SmartLinx module compatibility	• MultiRanger 200 HMI • HydroRanger 200 HMI

Module type	PROFINET IO module
Interface	RJ 45 female
Transmission rate	10/100 Mbits/s
Address	IP address though dip switches or via DCP or DHCP
Connection	Slave/server
SmartLinx module compatibility	• MultiRanger 200 HMI • HydroRanger 200 HMI • Milltronics BW500, BW500/L • Milltronics SF500

Module type	Modbus TCP/IP, EtherNet/IP
Interface	RJ 45 female
Transmission rate	10/100 Mbits/s
Address	IP address though dip switches or via DCP or DHCP
Connection	Slave/server
SmartLinx module compatibility	• MultiRanger 200 HMI • HydroRanger 200 HMI • Milltronics BW500, BW500/L • Milltronics SF500

Module type	DeviceNet
Interface	DeviceNet physical layer
Transmission rate	125, 250, 500
MAC address	0 ... 63
Connection	Slave (group 2)
SmartLinx module compatibility	• MultiRanger 200 HMI • MultiRanger 100/200 • HydroRanger 200 HMI • HydroRanger 200 • Milltronics BW500, BW500/L • Milltronics SF500

© Siemens 2020

Selection and ordering data	Article No.
SmartLinx modules provide direct digital connection to popular industrial communications buses with true plug-and-play compatibility with products manufactured by Siemens.	
SmartLinx PROFIBUS DP-V0 module	**7ML1830-1HR**
SmartLinx PROFIBUS DP-V1 module	**A5E35778741**
SmartLinx DeviceNet module	**7ML1830-1HT**
Smartlinx PROFINET IO module[1)]	**7ML1830-1PM**
SmartLinx Modbus TCP/IP, EtherNet/IP module	**7ML1830-1PN**
Operating Instructions	
All literature is available to download for free, in a range of languages, at	

http://www.siemens.com/processinstrumentation/documentation

[1)] SmartLinx PROFINET module is certified per standard V2.2.4.